This owner's manual applies to the SWIFT series.

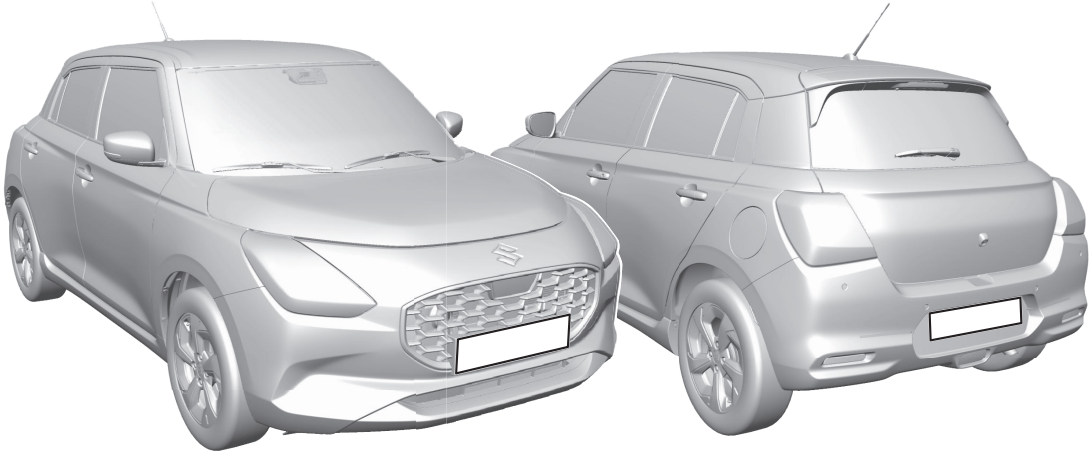

NOTE: The illustrated model is one of the SWIFT series.

Copyright © **Suzuki Motor Corporation** 2024 All Rights Reserved
No part of this document may be reproduced or transmitted in any form or by any means, electronic or mechanical, for any purpose, without the express written permission of Suzuki Motor Corporation.

FOREWORD

This manual should be considered as a permanent part of the vehicle and should remain with the vehicle when resold or otherwise transferred to a new owner or operator. Please read this manual carefully before operating your new SUZUKI vehicle and review the manual from time to time. It contains important information on safety, operation and maintenance.

SUZUKI MOTOR CORPORATION

All information in this manual is based on the latest product information available at the time of publication. Due to improvements or other changes, there may be discrepancies between information in this manual and your vehicle. SUZUKI MOTOR CORPORATION reserves the right to make production changes at any time, without notice and without incurring any obligation to make the same or similar changes to vehicles previously built or sold.

This vehicle may not comply with standards or regulations of other countries. Before attempting to register this vehicle in any other country, check all applicable regulations and make any necessary modifications.

IMPORTANT

⚠WARNING/⚠CAUTION/*NOTICE*/ *NOTE*

Please read this manual and follow its instructions carefully. To emphasize special information, the symbol ⚠ and the words **WARNING**, **CAUTION**, ***NOTICE*** and *NOTE* have special meanings. Pay particular attention to messages highlighted by these signal words:

⚠ WARNING
Indicates a potential hazard that could result in death or serious injury.

⚠ CAUTION
Indicates a potential hazard that could result in minor or moderate injury.

NOTICE
Indicates a potential hazard that could result in vehicle damage.

NOTE:
Indicates special information to make maintenance easier or instructions clearer.

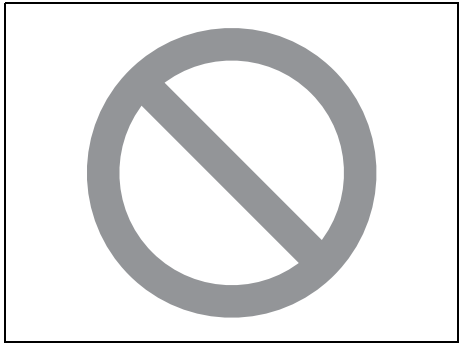

75F135

The circle with a slash in this manual means “Do not do this” or “Do not let this happen”.

MODIFICATION WARNING

⚠ WARNING

Do not modify this vehicle. Modification could adversely affect safety, handling, performance, or durability and may violate governmental regulations. In addition, damage or performance problems resulting from modification may not be covered under warranty.

NOTICE

Improper installation of mobile communication equipment such as cellular telephones, CB (Citizen’s Band) radios or any other wireless transmitters may cause electronic interference with your vehicle’s ignition system or any other electrical systems, resulting in vehicle performance problems. Consult a SUZUKI dealer or qualified service technician for advice.

NOTICE

The diagnostic connector of your vehicle is prepared only for the specific diagnostic tool for inspection and service purpose. Connecting any other tool or device may interfere with electronic parts operations and cause running out of batteries.

INTRODUCTION

Thank you for choosing SUZUKI and welcome to our growing family. Your choice was a wise one; SUZUKI products are a great value that will give you years of driving pleasure.

This Owner's Manual was prepared to help you have a safe, enjoyable, and trouble-free experience with your SUZUKI. In it you will learn about the vehicle's operation, its safety features and maintenance requirements. Please read it carefully before operating your vehicle. Afterwards, keep this Manual in the glove box for future reference.

Should you resell the vehicle, please leave this Manual with it for the next owner.

In addition to the Owner's Manual, the other booklets provided with your SUZUKI explain the vehicle's warranties. We recommend you read them as well to familiarize yourself with this important information.

When planning the regular scheduled maintenance of your SUZUKI, we recommend you visit your local SUZUKI dealership. Their factory-trained technicians will provide the best possible service and use only genuine SUZUKI parts and accessories.

NOTE:
- *"SUZUKI dealer" means an Authorized Suzuki Dealer and an Authorized Suzuki Service Workshop.*
- *The illustrations in this manual represent a typical variation, which may differ from your vehicle.*

SUZUKI MOTOR CORPORATION

RECOMMENDATION OF GENUINE SUZUKI PARTS AND ACCESSORIES USE

SUZUKI strongly recommends the use of genuine SUZUKI parts and accessories. Genuine SUZUKI parts and accessories are built to the highest standards of quality and performance, and are designed to fit your vehicle's exact specifications.

A wide variety of non-genuine replacement parts and accessories for SUZUKI vehicles are currently available in the market. Using these parts and accessories can affect the vehicle performance and shorten its useful life. Therefore, installation of non-genuine SUZUKI parts and accessories is not covered under warranty.

Non-Genuine SUZUKI Parts and Accessories

Some parts and accessories may be approved by certain authorities in your country.
Some parts and accessories are sold as SUZUKI-authorized replacement parts and accessories. Some genuine SUZUKI parts and accessories are sold as re-use parts and accessories. These parts and accessories are non-genuine SUZUKI parts and accessories and use of these parts is not covered under warranty.

Re-use of Genuine SUZUKI Parts and Accessories

The resale or re-use of the following items which could give rise to safety hazards for users is expressly forbidden:

- Airbag components and all other pyrotechnic items, including their components (e.g. cushion, control devices and sensors)
- Seat belt system, including their components (e.g. webbing, buckles, and retractors)

The airbag and seat belt pretensioner components contain explosive chemicals. These components should be removed and disposed of properly by SUZUKI-authorized service shop or scrap yard to avoid unintended explosion before scrapping.

Vehicle Data Recordings

There are certain components of your vehicle (the “Vehicle”) incorporating data storage modules or memories, which temporarily or permanently store the technical data below listed. These data are exclusively technical and serve for (i) identifying and correcting faults occurred in the Vehicle and/or (ii) optimizing functions of the Vehicle.

Recorded data

- Status of vehicle such as engine speed, etc.
- Vehicle conditions such as vehicle speed, travel distance, average fuel consumption, average speed, driving time, fuel consumption, total idling fuel saved, total idling stop time, etc.
- Conditions of the transmission such as gear position
- Operating conditions such as accelerator, brake, steering angle and shift position, etc.
- Information on malfunction of various computer systems
- Information on SRS airbag system operation (the data will be recorded in the EDR (Event Data Recorder)
- Operating conditions of the driving assist systems
- Images from the front camera (DSBS II)

NOTE:
- *The data cannot be used to detect the Vehicle’s movements.*
- *The data stored in data storage modules or memories differ according to the Vehicle’s grade, model and destinations.*
- *No conversation, noise/sound, nor images in the Vehicle will be recorded in any event.*
- *The data may not be recorded in some situations.*
- *The image recording function by the front camera (DSBS II) can be disabled depending on the countries and regions. Consult an authorized SUZUKI dealer or a qualified workshop for details. (If it is set not to record image data, no data will remain when the system is operating.)*

If these technical data are combined with other information (e.g. accident or witness report, damage on the Vehicle, etc.), there may be cases that such data may identify a specific person.

(For EU countries)
Parties who can read out the technical data using specific diagnostic devices (the “Parties”);

- Authorized distributors, dealers and repairers/service workshops of SUZUKI vehicles, and independent repairers/service workshops
- Manufacturer of SUZUKI vehicles (e.g. SUZUKI MOTOR CORPORATION (“SUZUKI”), Magyar Suzuki Corporation Ltd., Maruti Suzuki India Limited, Suzuki Motor (Thailand) Co., Ltd., Thai Suzuki Motor Co., Ltd.)
- Suppliers of SUZUKI vehicle parts, components and accessories (the “Suppliers”)

(For EU countries)
Data usage (the “Data Usage”)

SUZUKI and the Parties may use the Recorded Data in the modules or memories for the purpose of vehicle accident analysis, diagnose malfunctions, research and developments, quality improvements etc.

After an error has been corrected, data related to such error are basically deleted from error storage module or memory, while certain data are overwritten or kept further.

(For EU countries)
Conditions under which SUZUKI and the Parties can disclose or provide any of the Recorded Data to a third party

SUZUKI and the Parties may disclose or provide any of the Recorded Data to a third party under any of the following conditions:

- A consent from the Vehicle owner/user(s), or from lessee of the Vehicle (in case of lease) is obtained.
- It is officially requested by police, prosecutor, court, or other authorities.
- It is provided to a research institute for statistical study after processing in such a manner that owner/user(s) of the Vehicle cannot be identified.
- It is used by SUZUKI or the Parties or their directors, officers or employees for the purposes described in the Data Usage.
- It is used by SUZUKI or the Parties in a lawsuit.
- Any other cases allowed by applicable laws and regulations.

If required, you may receive further information from each of the Parties other than the Suppliers.

Erasing data

The data listed in the *“Recorded Data”* can be erased by an authorized SUZUKI dealer or a qualified workshop, excluding items necessary for vehicle maintenance and compliance with regulations.
SUZUKI will not be responsible for any data leakage of the data listed in the *“Recorded Data”* caused by not erasing the data when the Vehicle is handed over or scrapped. Please request an authorized SUZUKI dealer or a qualified workshop to erase the data at your discretion.

Event Data Recorder (EDR) of SRS airbag

EDR stands for Event Data Recorder.
The data will be recorded in the event of an accident such as SRS airbag being activated. Refer to the "What is SRS airbag system?" (P.2-50).

Data handling by Suzuki Connect

When you use Suzuki Connect, your vehicle location information and vehicle information will be stored in the Vehicle communication equipment to provide the service. Refer to the Suzuki Connect Terms of Service for details.
When the Vehicle is handed over to someone else or scrapped, it is necessary to cancel Suzuki Connect by yourself. By canceling Suzuki Connect, your personal and privacy information stored in the Vehicle communication equipment will be deleted. For details, refer to the Suzuki Connect application manual.

- SUZUKI will not be responsible for any data leakage of your personal and privacy information caused by not canceling Suzuki Connect.

eCall

Functions added based on agreement with the customer may transmit certain vehicle data (e.g. vehicle location in emergency cases) from the Vehicle to police or emergency service official for the purpose of rescue or response to traffic accident.

SERVICE STATION GUIDE

1. Engine hood (P.7-4)
2. Engine coolant (P.9-25)
3. Windshield washer fluid (P.9-54)
4. Engine oil dipstick (P.9-23)
5. Lead-acid battery (P.9-38)
6. CVT fluid dipstick (P.9-29)
7. Fuel (P.7-1)
8. Tyre pressure (see Tyre Information Label on driver's door lock pillar)
9. Tyre changing tools (if equipped) (P.10-21)
10. Flat tyre repair kit (if equipped) (P.10-27)

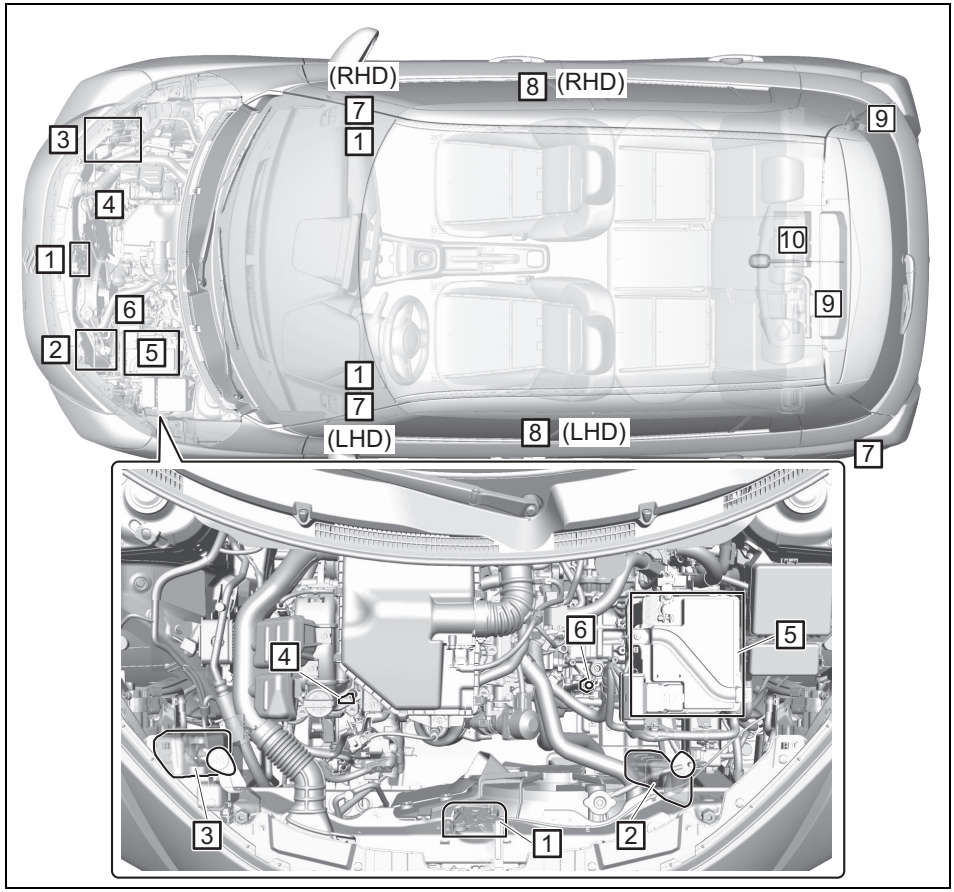

69T000010

TABLE OF CONTENTS

QUICK GUIDE	1
FOR SAFE DRIVING	2
BEFORE DRIVING	3
INSTRUMENT CLUSTER	4
OPERATING YOUR VEHICLE	5
ADVICE FOR YOUR DRIVING	6
OTHER CONTROLS AND EQUIPMENT	7
VEHICLE LOADING AND TOWING	8
INSPECTION AND MAINTENANCE	9
EMERGENCY SERVICE	10
APPEARANCE CARE	11
SPECIFICATIONS	12
SUPPLEMENT	13
INDEX	14

MEMO

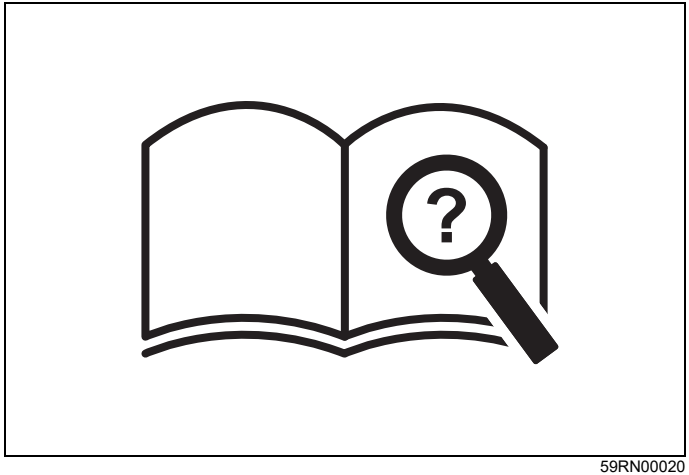

59RN00020

QUICK GUIDE

Illustrated table of contents 1-1
Warning lights and indicators 1-9
Warning buzzer 1-18
FAQ 1-29

Illustrated table of contents

Exterior

(1) Door locks (P.3-2)
(2) Side turn signal light on outside rear-view mirrors (if equipped) (9-44)
(3) Outside rearview mirror (P.2-10)
(4) Side turn signal light on fender (if equipped) (P.9-47)
(5) Front camera (DSBS II) (P.5-61)
(6) Windshield wiper (P.3-28, 9-51)
(7) Engine hood (P.7-4)
(8) Fuel filler cap (P.7-1)
(9) Rear window wiper (P.3-28, 9-51)
(10) Radio antenna (P.7-32)
(11) High-mount stop light (P.9-47)
(12) Rearview camera (P.5-145)
(13) Tailgate (P.3-6)
(14) Position light and Daytime Running Light (D.R.L.) (P.3-24, 9-45)
(15) Headlight (P.3-21, 9-44)
(16) Front turn signal light (P.3-26, 9-45)
(17) Front radar (DSBS II) (P.5-61)
(18) Towing eye cover (P.10-3)
(19) Reversing light (P.9-47)
(20) Brake light (P.9-47)
(21) Tail light (P.9-47)
(22) Rear turn signal light (P.3-26, 9-47)
(23) Parking sensor (P.5-136)
(24) Rear fog light (P.3-25, 9-49)
(25) License plate light (P.3-21, 9-49)

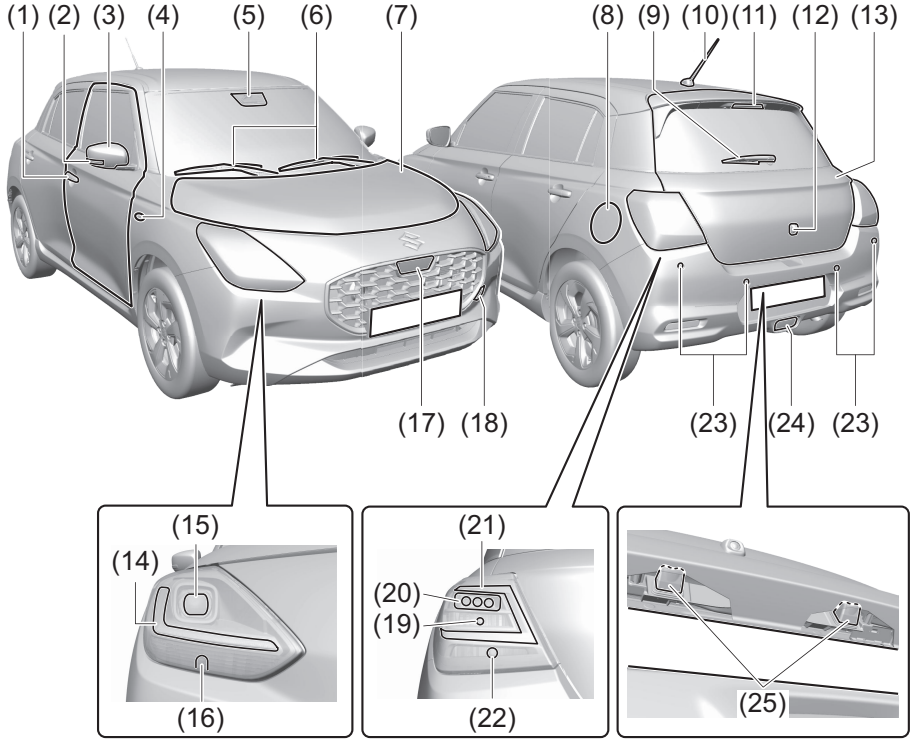

69T010010

Interior, side

(1) Front camera (DSBS II) (P.5-61)
(2) Front interior light (P.7-7, 9-50)
(3) Sun visor (P.7-6)
(4) Hands-free microphone (if equipped) (P.7-34) / eCall microphone (if equipped) (P.10-7)
(5) “SOS” button (P.10-7)
(6) Vanity mirror (if equipped) (P.7-7)
(7) Warning label for front passenger's front airbag (P.2-54) *1, *2
(8) Seat belt (P.2-19)
(9) Side curtain airbag (P.2-51)
(10) Inside rearview mirror (P.2-9)
(11) Front seat (P.2-5)
(12) Side airbag (P.2-51)

*1: Be sure to read the detailed information in the target page before using a child restraint system.
*2: NEVER use a rearward facing child restraint on a seat protected by an ACTIVE AIRBAG in front of it, DEATH or SERIOUS INJURY to the CHILD can occur.

72M00150

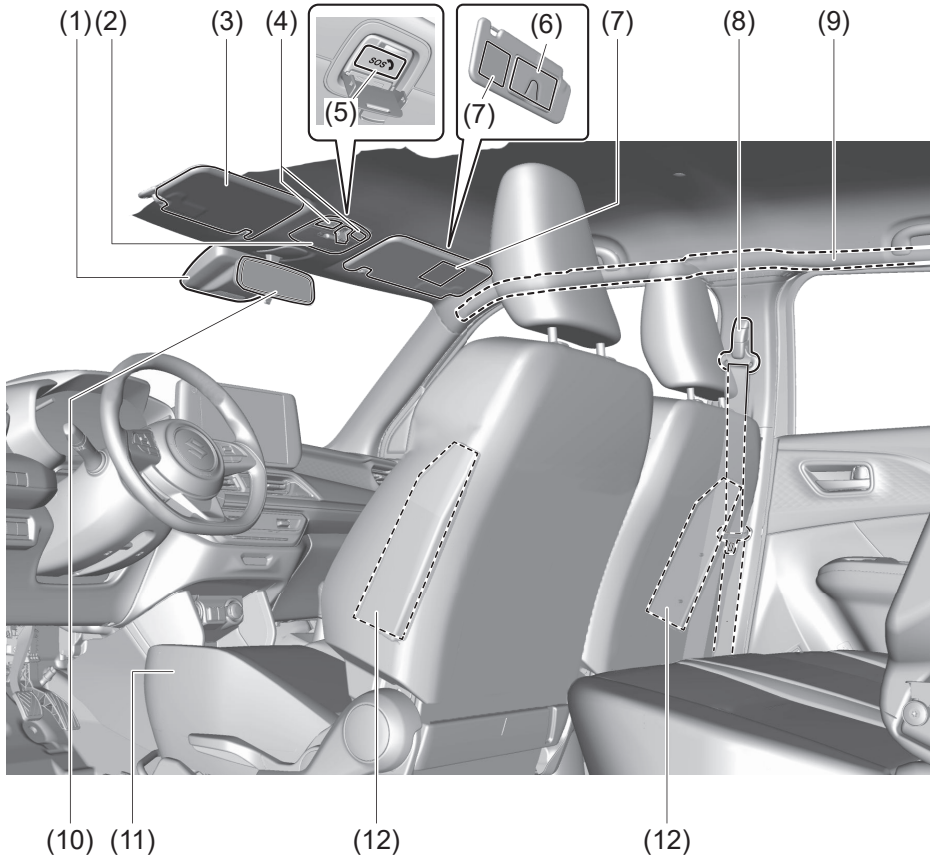

69T010020

Interior, rear

(1) Assist grip (P.7-13)
(2) Seat belt (P.2-19)
(3) Luggage compartment hook (P.7-15)
(4) Luggage compartment light (P.7-7, 9-50)
(5) Rear Seat (P.2-11)

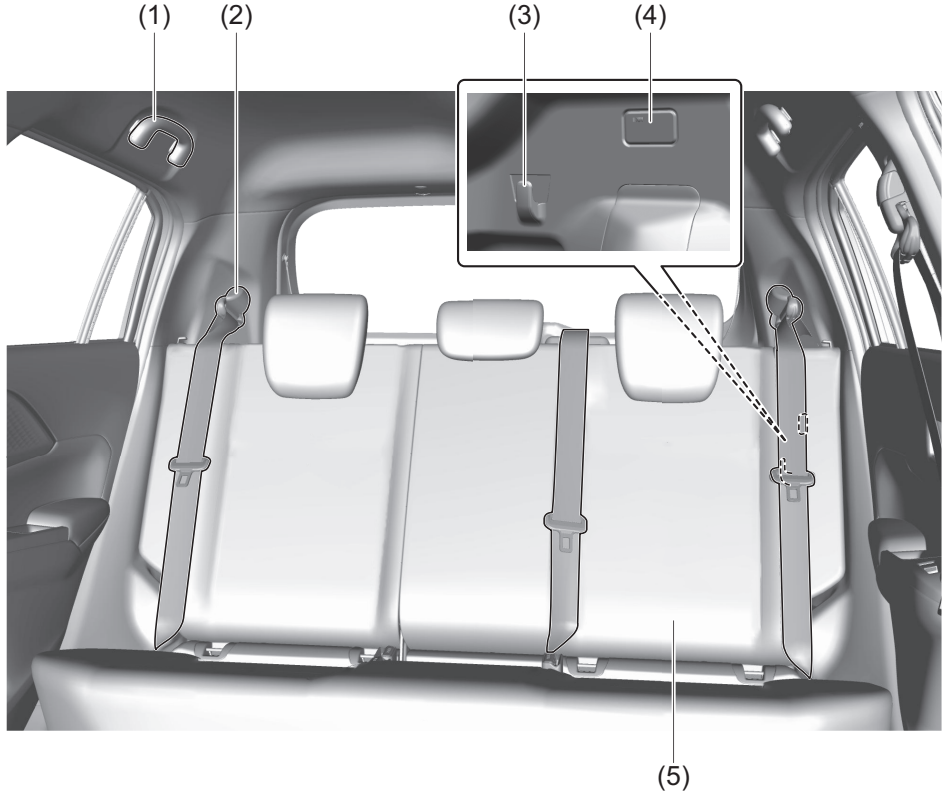

69T010030

Interior, front

(1) Driver's front airbag (P.2-50)
(2) Instrument cluster (P.4-1)
(3) Heating and air conditioning system (P.7-17)
(4) Front airbag (P.2-50)
(5) Glove box (P.7-13)
(6) Fuel lid opener lever (P.7-1)
(7) Engine hood release handle (P.7-4)
(8) Electric window control (P.3-17)
(9) Window lock switch (P.3-19)
(10) Electric mirror control (P.2-10)
(11) Door lock switch (P.3-4)
(12) Front seat heater switch (if equipped) (P.2-8)
(13) Parking brake (P.5-34)
(14) Gearshift lever (P.5-38)
(15) Airbag deactivation switch (if equipped) (P.2-52)

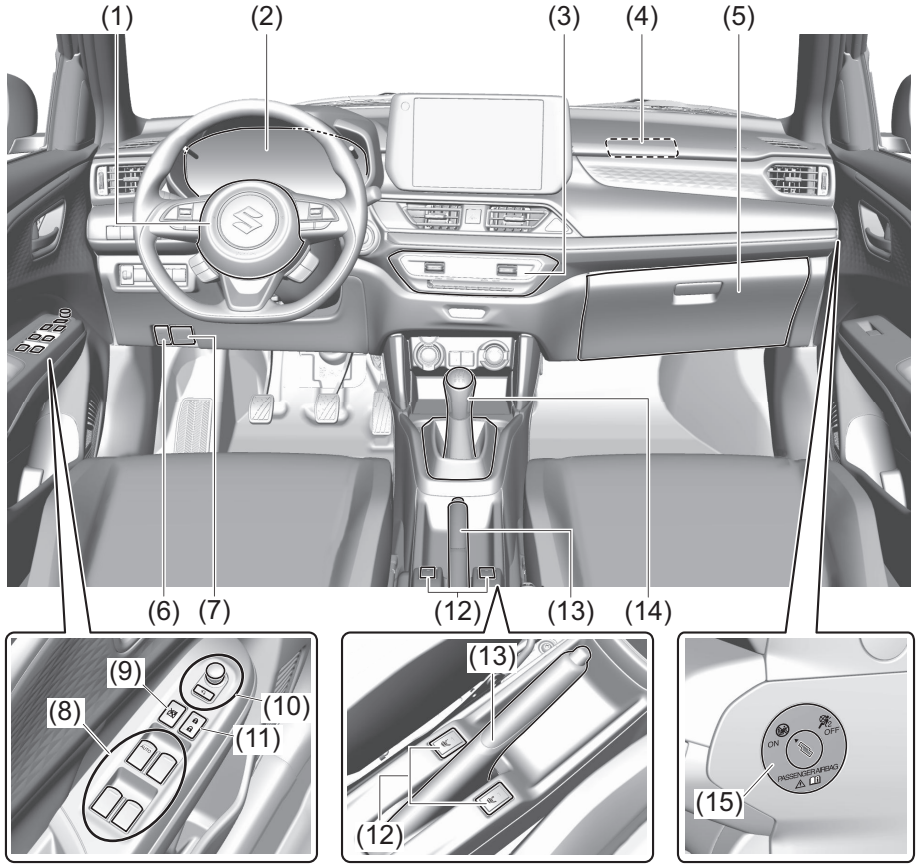

69T010040

Instrument panel 1

(1) Lighting control lever (P.3-21)/
Turn signal control lever (P.3-26)
(2) Shift paddle (P.5-41)
(3) Remote audio control (P.7-33)
(4) Adaptive cruise control switches (P.5-103, 5-114) /
speed limiter switches (P.5-55)
(5) Windshield wiper and washer lever (P.3-28) /
Rear window wiper/washer switch (P.3-30)
(6) Driver monitoring system camera (P.5-141)
(7) Hazard warning switch (P.3-27)
(8) Driver monitoring system LED (P.5-141)
(9) Remote audio controls (P.7-33)
(10) Tilt / telescoping steering column lock lever (P.2-9)
(11) Lane keep assist switch (P.5-87)
(12) USB charging socket (if equipped) (P.7-14)
(13) USB socket (P.7-14)
(14) Accessory socket (P.7-9)

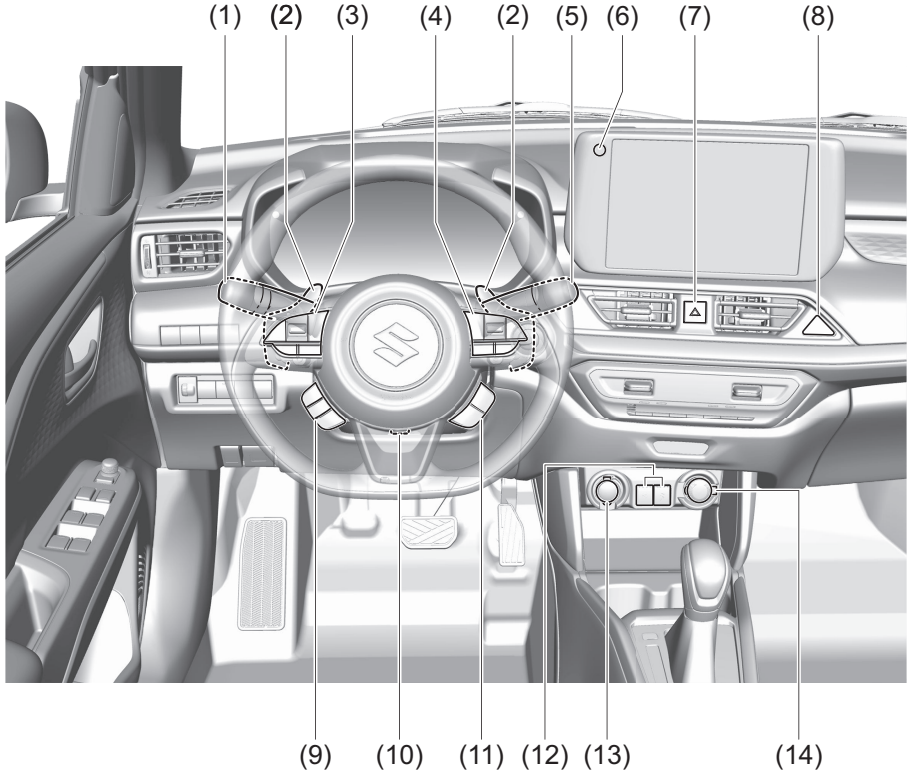

69T010050

Instrument panel 2

(1) ESP® OFF switch (P.5-150)
(2) Lane departure prevention OFF switch (P.5-83)
(3) Dual Sensor Brake Support II (DSBS II) OFF switch (P.5-79)
(4) Engine switch (P.5-5)
(5) Heated rear window and heated outside rearview mirror switch (P.3-32)
(6) Headlight leveling switch (P.3-26)
(7) ENG A-STOP OFF switch (P.5-31)
(8) Parking sensor buzzer OFF switch (P.5-141)

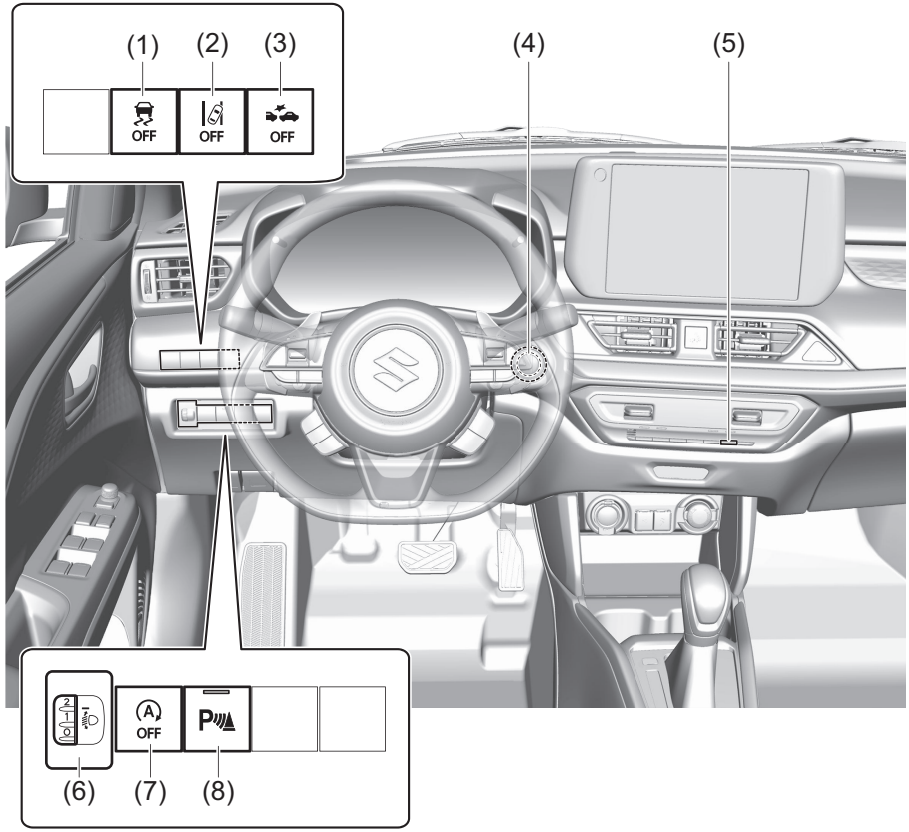

69T010060

Luggage compartment

(1) Luggage compartment cover (P.7-15)
(2) Spare tyre (if equipped) (P.9-37)
(3) Flat tyre repair kit (if equipped) (P.10-27)
(4) Towing eye (P.10-3)
(5) Jack handle (if equipped) (P.10-21)
(6) Wheel wrench (if equipped) (P.10-21)
(7) Jack (if equipped) (P.10-22)

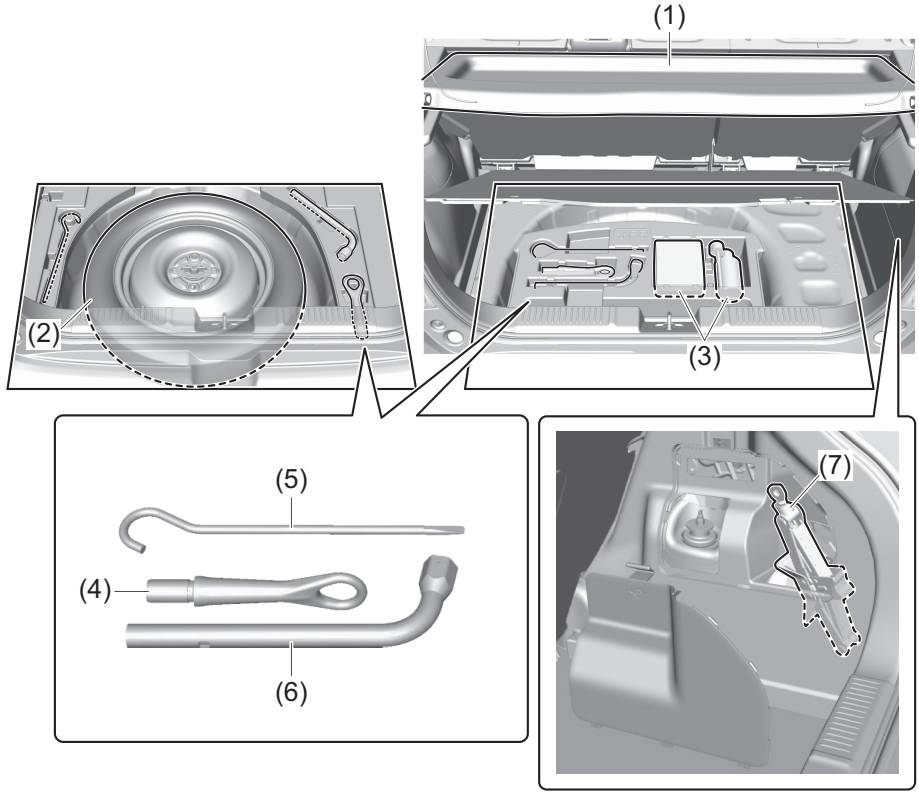

69T010070

Key

(1) Keyless push start system remote controller (P.3-10)
Keyless entry system (P.3-8)
Keyless push start system (P.5-9)
Starting engine (P.5-13)

(2) Key (P.3-1)
Door locks (p.3-2)

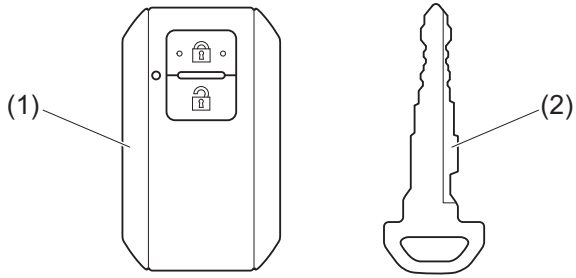

59RN01080

Warning lights and indicators

Warning Lights

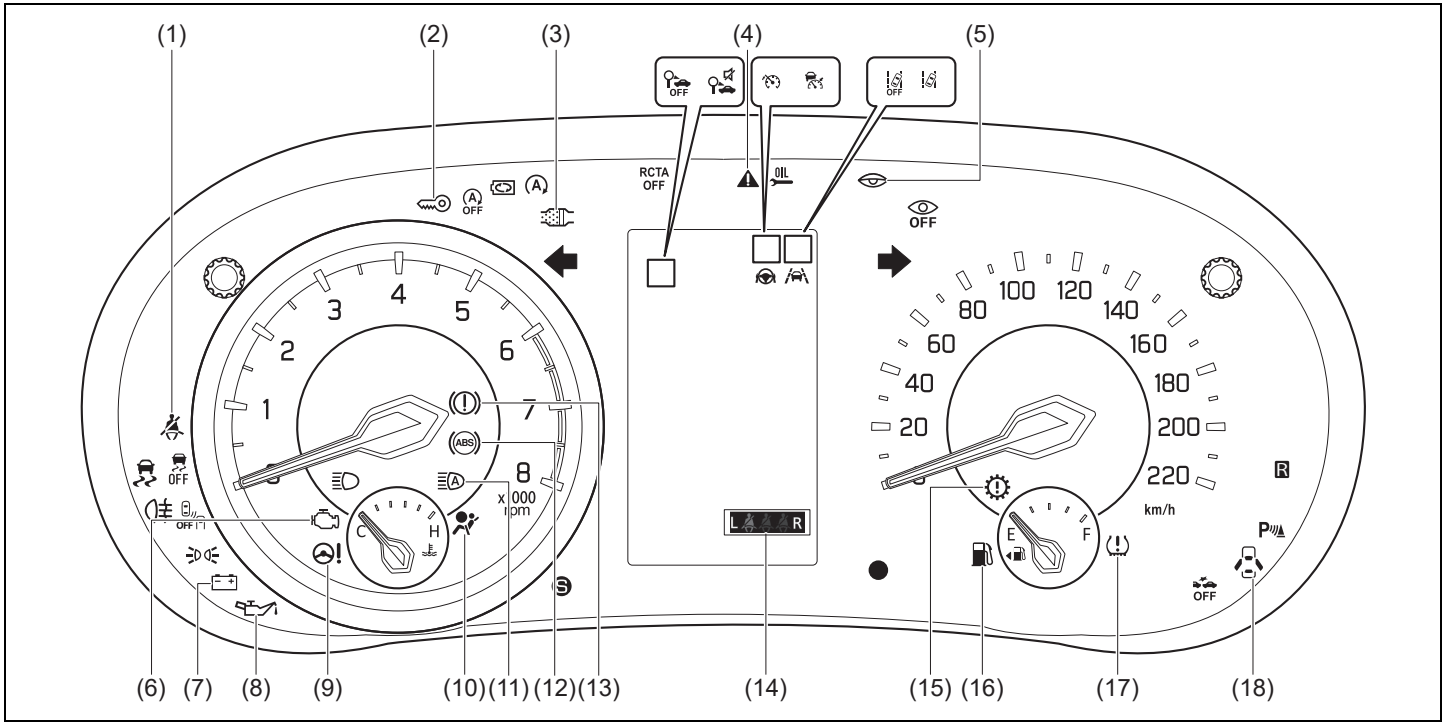

69T010080

- If a warning light continues to be lit or is blinking, there may be a problem with the vehicle or the system. Carefully read the following reference information and consult an authorized SUZUKI dealer or a qualified workshop.
- For the vehicle equipped with SUZUKI SAFETY SUPPORT, if a warning light or an indicator blinks, the message may be shown on the information display in the instrument cluster.
- It is considered normal that warning lights and indicators marked with an asterisk (*) are lit when pressing the engine switch to change the ignition mode to ON (i.e., high engine coolant temperature warning light initially lights up in red). If such lights do not light up, consult an authorized SUZUKI dealer or a qualified workshop.
- For the idling stop system, there is the particular condition that a warning light or an indicator is lit.

Warning light			Color	Name
(1)			Red	Driver’s seat belt reminder light / front passenger’s seat belt reminder light
(2)		*	Orange	Immobilizer / keyless push start system warning light
(3)			Orange	Gasoline Particulate Filter (GPF) warning light (if equipped)
(4)		*	Orange	Master warning indicator light
(5)		*	Red	Drowsy warning light
(6)		*	Orange	Malfunction indicator light

Warning light			Color	Name
(7)		*	Red	Charge warning light
(8)		*	Red	Engine oil pressure warning light
(9)		*	Orange	Electric power steering warning light
(10)		*	Red	Airbag warning light
(11)		*	Orange	High beam assist warning light
(12)		*	Orange	Anti-lock Brake System (ABS) warning light
(13)		*	Red	Brake system warning light
(14)			Red	Rear passenger’s seat belt reminder light

Warning light			Color	Name
(15)			Orange	Low fuel warning light
(16)		*	Orange	Transmission warning light (if equipped)
(17)		*	Orange	Low tyre pressure warning light (if equipped)
(18)			Red	Open door warning light

Indicators

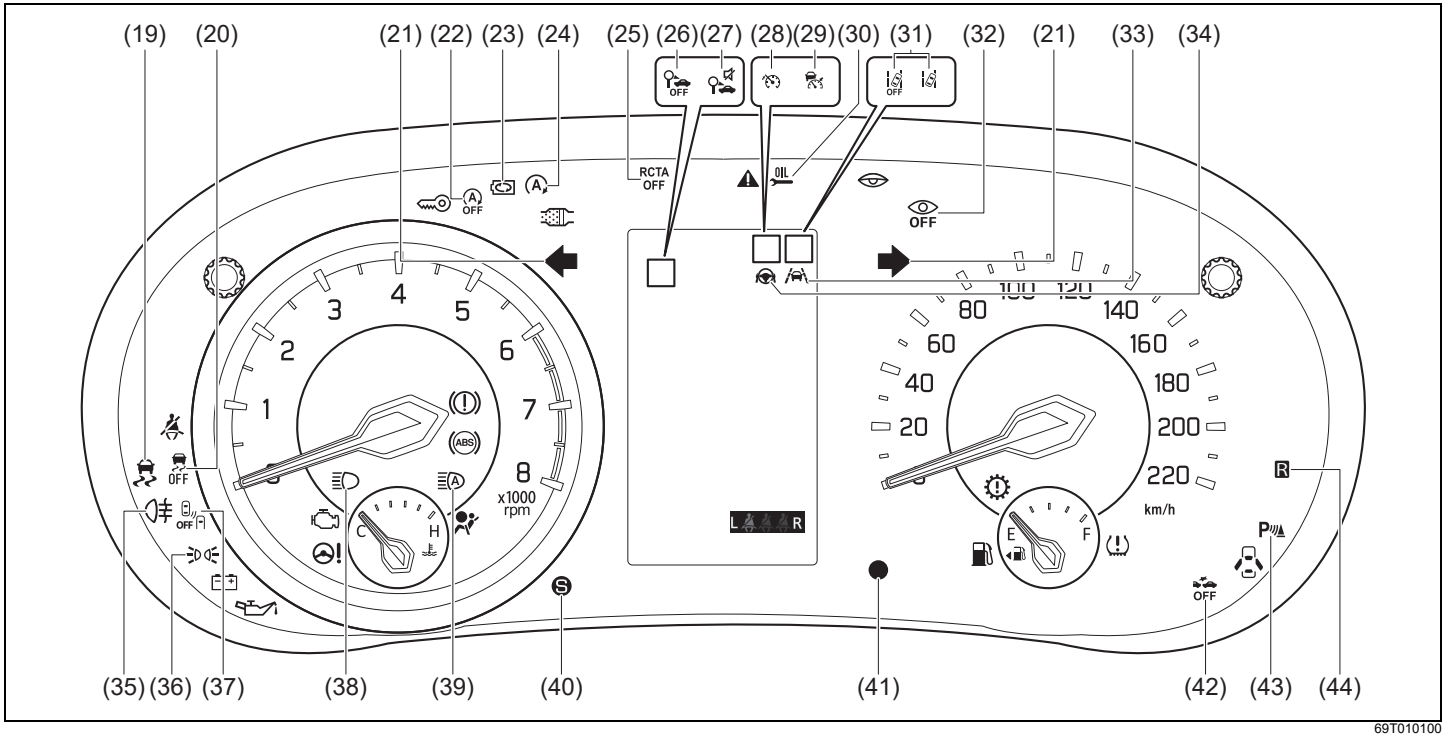
(19)
(20)
(21)
(22)
(23)
(24)
(25)
(26)
(27)
(28)
(29)
(30)
(31)
(32)
(21)
(33)
(34)
(35)
(36)
(37)
(38)
(39)
(40)
(41)
(42)
(43)
(44)
OFF
RCTA OFF
OIL
A OFF
ABS
x1000 rpm
km/h
C
H
E
F
L
R
P
69T010100

Indicator			Color	Name
(19)		*	Orange	ESP® indicator light
(20)	OFF	*	Orange	ESP® OFF indicator light
(21)			Green	Turn signal indicators
(22)	OFF	*	Orange	ENG A-STOP system OFF indicator light
(23)		*	White	Deceleration energy regenerating indicator light
(24)		*	Green	ENG A-STOP indicator light
(25)	RCTA OFF	*	Orange	Rear Cross Traffic Alert (RCTA) OFF indicator light
(26)	OFF	*	Orange	Traffic sign recognition OFF indicator light (if equipped)

Indicator			Color	Name
(27)			Orange	Traffic sign recognition buzzer OFF indicator light (if equipped)
(28)			Orange Green White	Speed Limiter indicator (if equipped)*1
(29)			Orange Green White	Adaptive cruise control indicator*1
(30)	OIL		Orange	Oil change request light (if equipped)
(31)		*	Orange Green White	Lane departure prevention indicator light*1
	OFF		Orange	Lane departure prevention OFF indicator light
(32)	OFF	*	Orange	Driver Monitoring System (DMS) OFF indicator light

*1 Depending on the operating status of the system, the color, blinking, and lighting of the indicator light will change.

Indicator			Color	Name
(33)		*	Orange Green White	Lane keep assist indicator light*1
(34)			White Green	Steering assist indicator light
(35)			Orange	Rear fog light indicator light
(36)			Green	Illumination indicator light
(37)	OFF	*	Orange	Blind Spot Monitor (BSM) OFF indicator light
(38)			Blue	Main beam (High beam) indicator light
(39)	A		Green	High beam assist indicator light
(40)	S		Orange	S-mode indicator (if equipped)

*1 Depending on the operating status of the system, the color, blinking, and lighting of the indicator light will change.

Indicator			Color	Name
(41)	●		Red	Security system indicator
(42)	OFF	*	Orange	Dual Sensor Brake Support II OFF indicator light
(43)	P	*	Orange	Parking sensor indicator light
(44)	R		Orange	“R” (reverse gear) indicator light (if equipped)

Warning buzzer

- *1: The master warning ⚠ in the instrument cluster blinks. At the same time, the message will be shown on the information display to inform the driver of the vehicle condition and the remedy.
- *2: The message will be shown on the information display to inform the driver of the vehicle condition and the remedy.

For all model

When	Warning buzzer	Instrument cluster	Cause and remedy
When one of the doors (including engine hood and tailgate) is opened	Interior buzzer • Beeps at short intervals	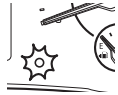 Blinks every 2 seconds	The security system warning is being activated. You can stop the warning by either of the following operations: • Unlock the doors using the keyless push start system remote controller or the request switch. • Press the engine switch to change the ignition mode to ON.
When the engine switch is pressed to change the ignition mode to ON	Interior buzzer • Beeps at long intervals	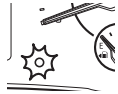 Blinks rapidly for approx. 8 seconds	Indicates that a security system has been activated while the vehicle has been parked; check the vehicle to make sure that it is not broken into or nothing is stolen.
	Interior buzzer • Chime	*1	The steering wheel lock has not been released. With load not applied, turn the steering wheel to the left or right so as to press the engine switch again.

When	Warning buzzer	Instrument cluster	Cause and remedy
When the engine switch is in ON mode	Interior buzzer • Chime	Lights up	The brake fluid is insufficient or the brake system may be faulty. Consult an authorized SUZUKI dealer or a qualified workshop.
	Interior buzzer • Chime	Lights up	The fuel level is low. Refuel soon.
When driving	Interior buzzer • Beeps at long intervals	Blinks *1	The driver does not wear his/her seat belt. Stop the vehicle in a safe place and wear your seat belt. The front passenger does not wear his/her seat belt. Wear the seat belt.
	Interior buzzer • Beeps at long intervals	L R	The rear passenger(s) does not wear his/her seat belt. Wear the seat belt.
	Interior buzzer • Beeps at short intervals	Lights up *1	The parking brake has not been released. Stop the vehicle in a safe place and release the parking brake.

When	Warning buzzer	Instrument cluster	Cause and remedy
When driving	Interior buzzer • Beeps at long intervals	Lights up *1	One of the doors is not completely closed. Stop the vehicle in a safe place and close all doors completely.
When opening the driver's door	Interior buzzer • Continuous beeps	Lights up *1	The headlights and/or the position lights are left on. Turn them off.
When the engine is stopped automatically by the ENG A-STOP system (for manual transmission vehicle)	Interior buzzer • Beeps at short intervals	*2	The gear shift lever is in a position other than "N", the engine will not be restarted automatically. Depress the clutch pedal and place the gearshift lever in "N" (Neutral) position .

When	Warning buzzer	Instrument cluster	Cause and remedy
When the engine is stopped automatically by the ENG A-STOP system	Interior buzzer • Short beep	*2	The engine has restarted automatically because either of the following conditions occurred. • The difference between the set temperature of the air conditioner and the interior air temperature became big. • The defroster is turned on. • Brake booster vacuum pressure is low. • The battery continues to be discharged.
	Interior buzzer • Continuous beeps	*2	The engine stalled because the hood is opened after the engine is stopped automatically. To restart the engine, follow the procedure below. 1) Set the parking brake firmly, and then place the gearshift lever in the “N” (Neutral position) (for manual transmission) or “P” position (for CVT). 2) Securely close the engine hood. 3) Press the engine switch to restart the engine.
	Interior buzzer • Continuous beeps	or Lights up *2	The engine has restarted automatically because either of the following operations was performed. • The driver’s seat belt is unfastened. • The driver’s door is opened. Before driving, close the door and buckle the seat belt. In addition, before getting out of the vehicle, follow the procedure below. 1) Set the parking brake firmly, and then place the gearshift lever in the “N” (Neutral position) (for manual transmission) or “P” position (for CVT). 2) When the vehicle will be stopped for a long time or when you will leave the vehicle unattended, press the engine switch to stop the engine.

When	Warning buzzer	Instrument cluster	Cause and remedy
When the engine switch is in ON mode	Interior buzzer • Short beep	Blinks every 1 second *1	There may be a problem with the keyless push start system. Ask an authorized SUZUKI dealer to have the system inspected.
When the engine switch operated	Interior buzzer • Chime	Lights up *1	The remote controller may be outside the vehicle or its battery may have become discharged. Bring the remote controller in the vehicle or touch the engine switch with the remote controller.
When the engine switch is pressed to change the ignition mode to ON or ACC	Exterior and/or interior buzzers • Beeps at short intervals Interior buzzer • Chime	Blinks *1	When the engine switch was pressed to change the ignition mode to ON or ACC, the remote controller was detected. However, when starting the engine, the remote controller was not detected. Place the remote controller in the interior workable area and then press the engine switch again.
When one of the door is opened or closed	Exterior and/or interior buzzers • Beeps at short intervals	Blinks *1	The remote controller may be outside the vehicle. Bring the remote controller in the vehicle.

When	Warning buzzer	Instrument cluster	Cause and remedy
When opening the driver's door	Interior buzzer • Continuous beeps	–	Press the engine switch to change the ignition mode from ON or ACC to LOCK (OFF).
	Interior buzzer • Chime	–	The steering lock fails to engage due to a fault in the system when the ignition mode is turned to LOCK (OFF) by pressing the engine switch. Have the vehicle inspected by an authorized SUZUKI dealer or a qualified workshop.
When pushing the request switch	Exterior buzzer • Continuous beeps	–	The engine switch is in ACC or ON mode. Press the engine switch to change the ignition mode to LOCK (OFF).
		–	The remote controller is left inside the vehicle. Take the remote controller outside the vehicle.
		Lights up *2	Any door (including the tailgate) is open. Close all doors completely
When pushing LOCK button on the remote controller	Interior buzzer • Continuous beeps	Lights up *2	Any door (including the tailgate) is open. Close all doors completely
When driving	Interior buzzer • Beeps at short intervals	*2	The Dual Sensor Brake Support II (DSBS II) is activated. Depress the brake pedal firmly.

When	Warning buzzer	Instrument cluster	Cause and remedy
When stopping or backing up the vehicle	Interior buzzer • Short beeps at long intervals, short beeps at short intervals, short beeps at very short intervals, or continuous beeps	–	Rear parking sensors detect an obstacle on the rear side of the vehicle. Check the surrounding area directly with your eyes and the mirrors, and back up the vehicle slowly.
When driving or backing up the vehicle	Interior buzzer • Beeps at short intervals	–	Blind Spot Monitor or rear cross traffic alert detect an obstacle on the rear side of the vehicle. Check the surrounding area directly with your eyes and the mirrors, and back up the vehicle slowly.
When driving	Interior buzzer • Beeps at short intervals	*2	The distance from the preceding vehicle is too close, such as when a vehicle cut in front of your vehicle while the adaptive cruise control is operating. Depress the brake pedal to maintain appropriate distance from the preceding vehicle.
	Interior buzzer • Continuous beeps	*2	While the adaptive cruise control was operating, the system has been canceled or your vehicle has stopped following the preceding vehicle. Check the vehicle condition and set the vehicle speed again.
	Interior buzzer • Beeps at short intervals	*2	The adaptive cruise control could not be set. Check the vehicle condition and set the vehicle speed again.

When	Warning buzzer	Instrument cluster	Cause and remedy
When driving	Interior buzzer • Short beep	*2	The vehicle swaying warning has activated. Check the road conditions, carefully operate the steering wheel and return to the center of the lane.
	Interior buzzer • Beeps at short intervals	*2	The lane departure prevention has activated. Check the road conditions, carefully operate the steering wheel and return to the center of the lane.
	Interior buzzer • Beeps at short intervals*3	*2	The lane departure warning has activated. Check the road conditions, carefully operate the steering wheel and return to the center of the lane.
When driving	Interior buzzer • Beeps at short intervals	*2	The hands off steering wheel warning has activated. Hold the steering wheel firmly.
	Interior buzzer • Continuous beeps	*2	The hands off steering wheel warning has activated and lane keep assist has stopped. Hold the steering wheel firmly.
	Interior buzzer • Beeps at short intervals	*2	The lane keep assist has been canceled. Check the road conditions and set the lane keep assist again.

*3 You can select “Vibration” via the setting mode of the information display.
For details, refer to “Setting mode of information display” (P.12-8).

When	Warning buzzer	Instrument cluster	Cause and remedy
When driving	Interior buzzer • Beeps at short intervals	*2	(For vehicle with speed limiter) The speed limit sign displayed on the information display has been updated. Check the actual speed limit and follow the traffic rules accordingly.
	Interior buzzer • Beeps at short intervals or Chime*4	*2	The vehicle speed has exceeded the speed limit sign's value displayed on the information display. Check the actual speed limit and follow the traffic rules accordingly.

*4 The number of buzzer sound depends on the country and region.

When	Warning buzzer	Instrument cluster	Cause and remedy
When driving	Interior buzzer • Beeps at short intervals	*2	The drowsiness warning has activated. If you feel sleepy, check the road conditions and stop the vehicle immediately.
	Interior buzzer • Short beep	*2	The distracted driving warning has activated. Check the road conditions and drive safely.
	Interior buzzer • Short beep	*2	The asleep at the wheel warning has activated. If you feel sleepy, check the road conditions and stop the vehicle immediately.

For continuously variable transmission (CVT) model

When	Warning buzzer	Instrument cluster	Cause and remedy
When the engine switch is pressed to change the ignition mode to LOCK (OFF)	Interior buzzer • Short beep	*1	You cannot change the ignition mode to LOCK (OFF) because there may be malfunction of the gearshift lever. Consult with an authorized SUZUKI dealer or a qualified workshop.
The engine switch is pressed with the gearshift lever in a position other than “P” or “N”	Interior buzzer • Short beep	*2	The engine cannot be started. Shift the gearshift lever into “P”, push the start switch to start the engine with depressing the brake pedal.
The engine switch is pressed with the gearshift lever in a position other than “P” or “N” and depressing the brake pedal.	Interior buzzer • Beeps at short intervals	*2	
The engine switch is pressed with the gearshift lever in a position other than “P” or “N” and without depressing the brake pedal.	Interior buzzer • Continuous beeps	*2	

When	Warning buzzer	Instrument cluster	Cause and remedy
When operate the gearshift lever with depressing the brake pedal.	Interior buzzer • Beeps at short intervals	–	Even though the gearshift lever is shifted, the gear is not shifted to the desired selector position. Shift the gearshift lever into “P” with depressing the brake pedal, and then operate the gearshift lever again.
When operate the gearshift lever without depressing the brake pedal.	Interior buzzer • Continuous beeps	–	

Model with manual mode

When	Warning buzzer	Instrument cluster	Cause and remedy
When using the shift paddle	Interior buzzer • Beeps at short intervals	–	The gear position is not set in the desired position by operating the paddle shift switch. Select the proper gear position for the vehicle speed.

FAQ

Q & A

Refer to the following list of frequently asked questions.

Door opening / closing

Q. The keyless entry system does not work. What should I do?

A. There is a possibility that something is interfering with the function of the keyless entry system. Refer to “Keyless entry system” (P.3-8).

A. If the battery of the Keyless push start system remote controller is dead, replace it. Refer to“Keyless push start system remote controller battery replacement” (P.9-56).

Q. A loud alarm sounds when opening the door. What does this mean?

A. The security system has been activated. Press the engine switch to change the ignition mode to ON to stop the alarm. For the correct method of handling, refer to “Theft deterrent alarm system (if equipped)” (P.3-15).

Window glass

Q. How can I clear fog on the inside of the windshield and door glass areas?

A. Use the defroster switch. Refer to “Manual air conditioning system (with digital control panel)” (P.7-18) or “Automatic heating and air conditioning system (climate control)” (P.7-25).

Q. How can I clear fog on the inside of the rear window glass?

A. Use the heated rear window switch. Refer to “Heated rear window switch/heated outside rearview mirror switch” (P.3-32).

Tyres

Q. I get a flat tyre. What should I do?

A. Depending on the tyre conditions, you can repair the flat tyre by the flat tyre repair kit. Refer to “Flat tyre repair kit (if equipped)” (P.10-27) or “Tyre changing tool (if equipped)” (P.10-21).

Running out of battery

Q. The battery runs out and the engine does not start. What should I do?

A. Connect the battery of a vehicle for assistance to jump leads and start the engine. Refer to “Jump-starting instructions” (P.10-32).

Engine oil

Q. I would like to change the engine oil. What should I do?

A. Refer to “Engine oil and filter” (P.9-23) and “Specifications” (P.12-3).

EBNG A-STOP system

Q. The ENG A-STOP system does not work. What should I do?

A. Refer to “ENG A-STOP system (engine auto stop start system)” (P.5-20).

SUZUKI SAFETY SUPPORT

Q. How can I know when SUZUKI SAFETY SUPPORT operates and does not operate?

A. Refer to “SUZUKI SAFETY SUPPORT” (P.5-59).

Electrical equipment

Q. The headlights or brake lights do not light up. What should I do?

A. Check the light bulbs. Refer to “Bulb replacement” (P.9-43).

Q. I cannot use an electrical device. What should I do?

A. Check the fuses. Refer to “Fuses” (P.9-40).

FOR SAFE DRIVING

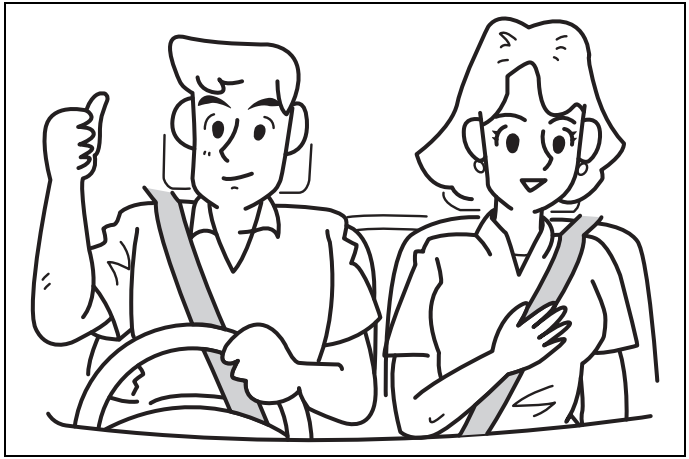

59RN02300

Driver's seat floor 2-1
Seat belts and child restraint systems 2-2
Front seats 2-5
Tilt / telescoping steering lock lever 2-9
Mirrors 2-9
Rear seats 2-11
Safety for child 2-15
Seat belt 2-19
Handling and care for seat belt 2-25
Seat belt pretensioner system 2-26
Seat belt force limiter system 2-28
Child restraint systems 2-29
Selecting an appropriate child restraint system 2-31
Supplemental Restraint System (airbags) 2-49
When driving the vehicle with SRS airbag system 2-53
Handling for airbags 2-57
Function of airbags 2-59
When starting the engine 2-66
When loading the luggage 2-68

Driver's seat floor

Floor mats

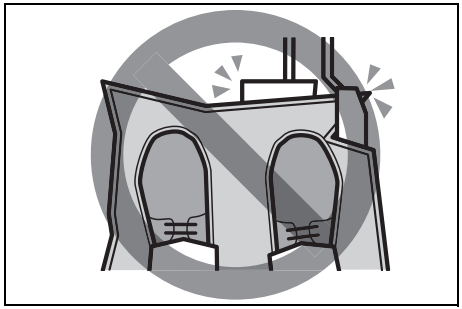

83S06010

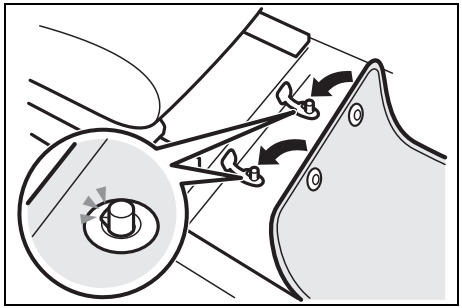

55T020010

To prevent the driver's side floor mat from sliding forward and possibly interfering with the operation of the pedals, genuine SUZUKI floor mats are recommended.
Whenever you put the driver's side floor mat back in the vehicle after it has been removed, hook the floor mat grommets to the fasteners and position the floor mat properly in the footwell.

When you replace the floor mats in your vehicle with a different type such as all-weather floor mats, we highly recommend to use genuine SUZUKI floor mats for proper fitting.

⚠ WARNING

Failure to take the following precautions may result in the driver's side floor mat interfering with the pedals and causing a loss of vehicle control or an accident.

Description of warning label

- **Slid forward floor mat could interfere with the operation of the pedals and lead to unexpected accident.**

- **Check that the floor mat grommets are hooked to the fasteners.**

(Continued)

⚠ WARNING

(Continued)

- **Never stack floor mats because it may prevent from securing to the fasteners and cause sliding forward.**

- **For more details, read this owner's manual.**

- **Never use a floor mat which does not fit the floor contours.**

Clearing the floor

⚠ WARNING

69RHS157

Do not leave empty cans, etc. at your feet. These objects may interfere with pedal operation and cause accidents.

Seat belts and child restraint systems

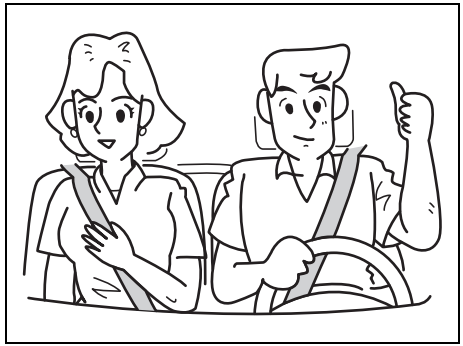

59RN02300

⚠ WARNING

- **Wear your seat belts at all times.**
- **An airbag supplements or adds to the frontal collision protection offered by seat belts. The driver and all passengers must be properly restrained by fastening seat belts at all times, whether or not an airbag is mounted at their seating position, to minimize the risk of severe injury or death in the event of a collision.**

(Continued)

⚠ WARNING

(Continued)

- **Do not modify, remove, disassemble seat belts. Doing so may prevent them from functioning properly and cause the risk of severe injury or death in the event of a collision.**

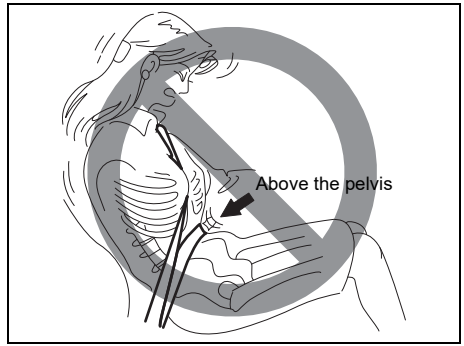

59RN02390

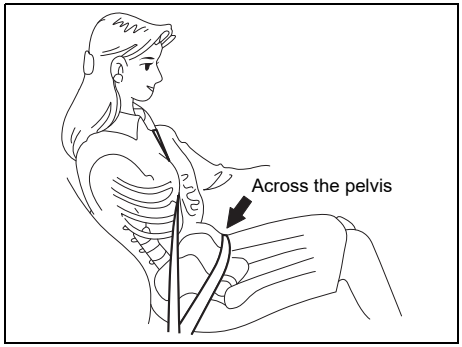

59RN02400

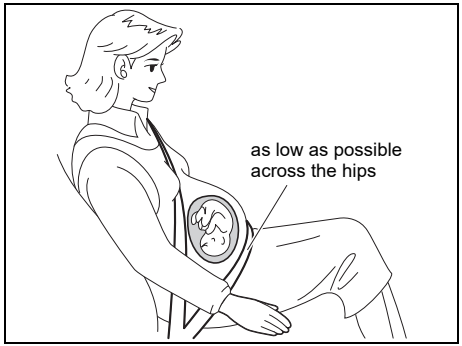

59RN02380

⚠ WARNING

- **Never allow persons to ride in the cargo area of a vehicle. In the event of an accident, there is a much greater risk of injury for persons who are not riding in a seat with their seat belt securely fastened.**
- **Seat belts should always be adjusted as follows:**
  - **the lap portion of the belt should be worn low across the pelvis, not across the waist.**
  - **the shoulder straps should be worn on the outside shoulder only, and never under the arm.**
  - **the shoulder straps should be away from your face and neck, but not falling off your shoulder.**
- **Seat belts should never be worn with the straps twisted and should be adjusted as tightly as is comfortable to provide the protection for which they have been designed. A slack belt will provide less protection than a snug belt.**
- **Check that seat belt latch plate (tongue) is inserted into the proper buckle especially in the rear seats. It is not possible to insert into the wrong buckles in the rear seats.**

(Continued)

⚠ WARNING

(Continued)

- **Pregnant women should use seat belts, although specific recommendations about driving should be made by the woman's medical advisor. Remember that the lap portion of the belt should be worn as low as possible across the hips, as shown in the illustration.**
- **Do not fasten your seat belt over hard or breakable objects in your pockets or on your clothing. If an accident occurs, objects such as glasses, pens, etc. under the seat belt can cause injury.**

59RN020060

- **Do not hold a child on a passenger's lap. Even if the passenger holds the child tightly, he/she would not be supported enough in the event of an accident and it could result in a serious injury of the child.**

(Continued)

⚠ WARNING

(Continued)

- **Never use the same seat belt for more than one occupant and never attach a seat belt over an infant or child being held on an occupant's lap. Such seat belt use could cause serious injury in the event of an accident.**
- **Periodically inspect seat belt assemblies for excessive wear and damage. Seat belts should be replaced if webbing becomes frayed, contaminated or damaged in any way. It is essential to replace the entire seat belt assembly after it has been worn in a severe impact, even if damage to the assembly is not obvious.**
- **Children aged 12 and under should ride properly restrained in the rear seat.**

(Continued)

⚠ WARNING

(Continued)

- **Infants and small children should never be transported unless they are properly restrained. Restraint systems for infants and small children can be purchased locally and should be used. Check that the system you purchase meets applicable safety standards. Read and follow all the directions provided by the manufacturer.**
- **For child, if the seat belt irritates the neck or face, use a child restraint system appropriately for the child. The seat belts of your vehicle are principally designed for persons of adult size.**
- **Avoid contamination of seat belt webbing by polishes, oils, chemicals, and particularly battery acid. Cleaning may safely be carried out using mild soap and water.**
- **Do not insert any items such as coins and clips into the seat belt buckles, and be careful not to spill liquids into these parts. If foreign materials get into a seat belt buckle, the seat belt may not work properly.**
- **All seatbacks should always be in an upright position when driving, or seat belt effectiveness may be reduced. Seat belts are designed to offer maximum protection when seatbacks are in the upright position.**

Adjustment before driving

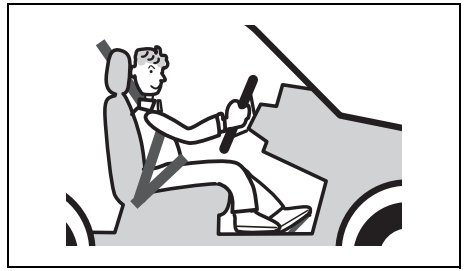

80J014

⚠ WARNING

- **When driving, do not adjust the steering wheel (only adjustable type with certain specifications), the seat, the inside rearview mirror or the outside rearview mirrors. Otherwise, there is the risk of mistaken operation of the steering wheel or reduced awareness of what is in front of you, possibly leading to an accident.**
- **Do not tilt the seatback further back than necessary. Otherwise, the head restraint and the seat belt cannot function as intended.**

Correct use of seat belt

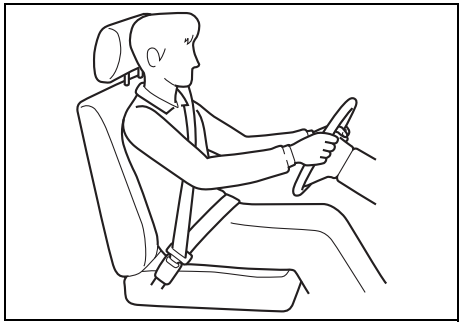

69RHS158

- Adjust the seat to the correct position. Sit your body fully into the seat.
- Make sure that the seat belt is not twisted.
- Make sure that you place the lap portion of the belt as low as possible across the pelvis.
- The upper belt should rest on the area midway between the shoulder and the base of the neck.
- Confirm that the belt is not twisted in any way, and remove any slack.

⚠ WARNING

- **If you do not fasten your seat belt properly, your body may not be restrained in a sudden braking and a collision. This may cause severe injury.**
  Fasten your seat belt properly before driving.

77R20050

- **If all the passengers do not fasten their seat belts properly, their body may not be restrained in a sudden braking and a collision. This may cause severe injury.**
  Ask all the passengers on the front passenger's seat and the rear seats to fasten their seat belts properly before driving.

Front seats

Seat adjustment

⚠ WARNING

- **Never attempt to adjust the driver's seat or seatback while driving. The seat or seatback could move unexpectedly, causing loss of control. Check that the driver's seat and seatback are properly adjusted before you start driving.**
- **To avoid excessive seat belt slack, which reduces the effectiveness of the seat belts as a safety device, check that the seats are adjusted before the seat belts are fastened.**
- **All seatbacks should always be in an upright position when driving, or seat belt effectiveness may be reduced. Seat belts are designed to offer maximum protection when seatbacks are in the upright position.**

(Continued)

⚠ WARNING

(Continued)

- **If you place a cushion, etc. between the seatback and your back, you may not be able to drive the vehicle in a correct posture. Also, the seat belt and the head restraint may not provide the best performance. This may cause severe injury in an accident.**
  Do not place a cushion, etc. between the seatback and your back.
- **Do not place any object under the front seat. If an object becomes caught under the front seat, the following may occur.**
  - **The seat will not be latched.**
  - **The underseat container will be damaged.**
  - **The lithium-ion battery, located under the front passenger's seat (under the underseat container) in a model equipped with HYBRID, will be damaged.**
- **Do not leave cigarette lighters or spray cans on the floor. If a cigarette lighter or spray can is on the floor, it may light accidentally when luggage is loaded or the seat is adjusted, causing a fire.**

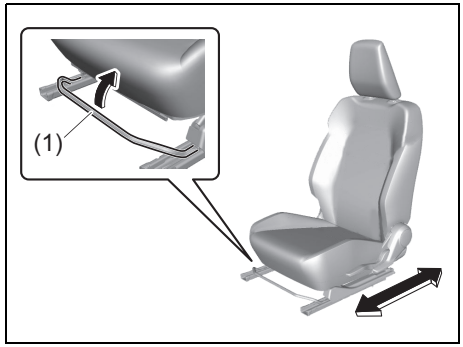

69T020010

Seat position adjustment lever (1)
Pull the lever up and slide the seat.

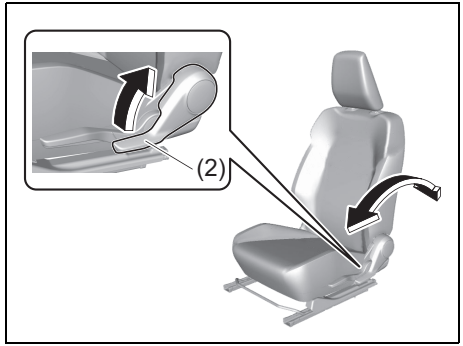

69T020020

Seatback angle adjustment lever (2)
Pull the lever up and move the seatback.

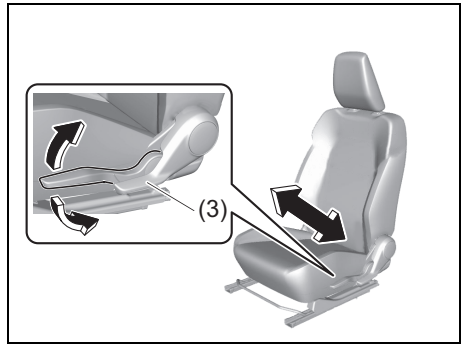

69T020030

Seat height adjustment lever (3)
Pull the lever up to raise the seat. Push the lever down to lower the seat.

After adjustment, move the seat and seatback back and forth to check if it is securely latched.

Head restraints

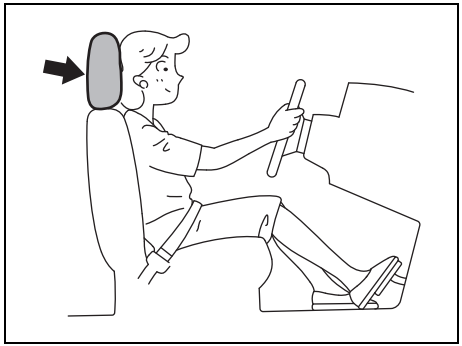

80J001

Head restraints are designed to help reduce the risk of neck injuries in the case of an accident. Adjust the head restraint to the position which places the center of the head restraint closest to the top of your ears. If this is not possible for very tall passengers, adjust the head restraint as high as possible.

⚠ WARNING

- **If you drive the vehicle with the head restraint removed, a passenger's backward tilting cannot be prevented in a collision from the backward and the impact to a passenger's head cannot be reduced in a sudden braking or a collision. This may cause severe injury.**
  Never drive the vehicle with the head restraints removed.
- **If the head restraint is installed back to front or it is not installed securely, the head restraint may not provide the best performance in case of emergency, resulting in severe injury.**
  If the head restraint is installed back to front, you cannot adjust the height and install it securely.
  Make sure to install the head restraint securely in the right direction.
- **Being distracted by head restraint adjustment could lead to an accident.**
  Do not attempt to adjust the head restraint while driving.

NOTE:
It may be necessary to recline the seatback to provide enough overhead clearance to remove the head restraint.

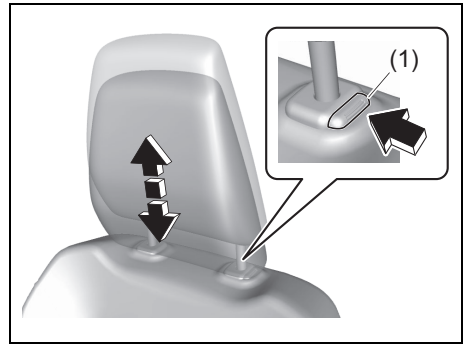

69TJ020040

To raise the front head restraint, pull upward the head restraint until it clicks. To lower the head restraint, push down the head restraint while holding in the lock button (1). If a head restraint must be removed (for cleaning, replacement, etc.), push in the lock button (1) and pull the head restraint all the way out.

Front seat heater (if equipped)

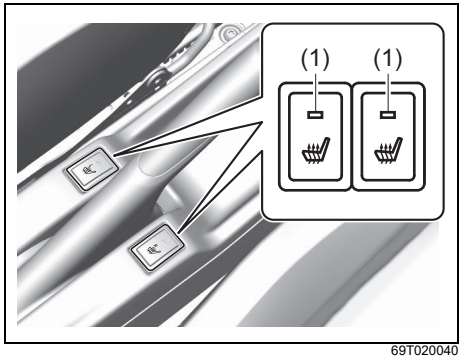

69T020040

With the ignition mode is ON, push in one or both of the seat heater switch(es) to warm the corresponding seat(s). The indicator light (1) in the switch will also come on. To turn off the seat heater, push in the switch again. The indicator light (1) in the switch will go off.

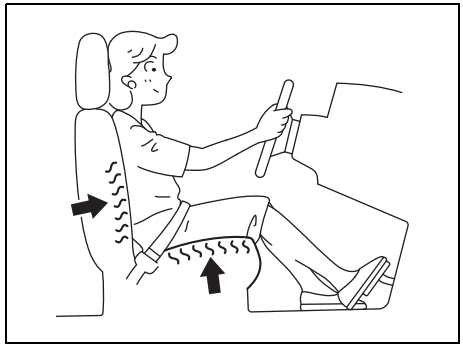

69T020320

⚠ CAUTION

Improperly using the seat heater can be hazardous. An occupant can suffer burns even if the heating temperature is fairly low, if the occupant is wearing thin pants, a thin skirt or shorts and leaves the heater on for long periods.
Avoid using the seat heater for these occupants:

- **People who have reduced feeling in their legs, including the elderly or those with certain disabilities**
- **Small children, or anyone with sensitive skin**
- **People who are asleep or under the influence of alcohol or other drugs which make them tired**

NOTICE

To avoid damaging the heater element:

- **Do not subject the front seats to heavy impacts, such as children jumping on them.**
- **Do not cover the seat with any insulating materials such as blankets or cushions.**

NOTE:
The heater does not stop automatically while the ignition mode is ON. If you do not turn it off, it will continue to operate.

Tilt / telescoping steering lock lever

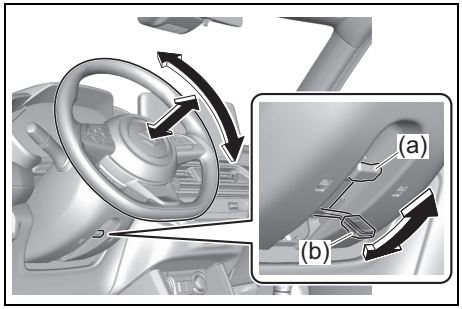

69T020050

(a) LOCK
(b) UNLOCK

The lock lever is located under the steering column. To adjust the steering wheel height and fore-aft position:

1) Push down the lock lever to unlock the steering column.
2) Adjust the steering wheel to the desired height and fore-aft position and lock the steering column by pulling up the lock lever.
3) Try moving the steering wheel up and down and back and forth to check that it is securely locked in position.

⚠ WARNING

Never attempt to adjust the steering wheel while the vehicle is moving or you could lose control of the vehicle.

Mirrors

Inside Rearview Mirror

You can adjust the inside rearview mirror by hand to see the rear of your vehicle in the mirror.

Type A

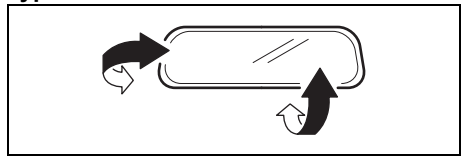

74LHT0235

Type B

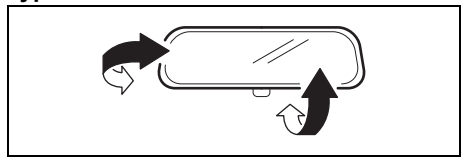

68LMT0205

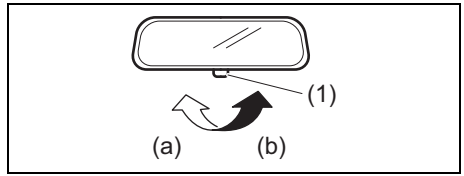

69T020290

(a) Day driving
(b) Night driving

To adjust the mirror, set the selector tab (1) to the day position, and then move the mirror up, down or sideways by hand to obtain the best view.

When driving at night, you can move the selector tab to the night position to reduce glare from the headlights of vehicles behind you.

⚠ WARNING

- **If you adjust the inside rearview mirror while driving, you could lose control of the vehicle, resulting in an accident.**
  Adjust the inside rearview mirror before driving.
- **Always adjust the mirror with the selector set to the day driving position.**
- **Only use the night position if it is necessary to reduce glare from the headlights of vehicles behind you. Be aware that in this position you may not be able to see some objects that could be seen in the day position.**

Outside rearview mirrors

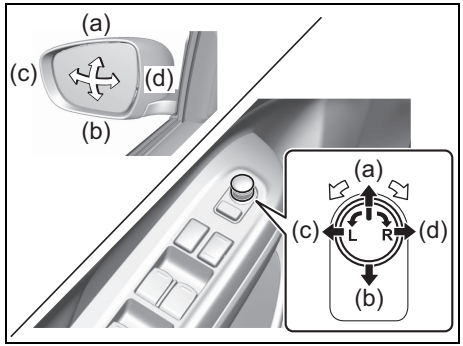

69T020060

The switch to control the electric mirrors is located on the driver's door panel. You can adjust the mirrors when the ignition mode is ACC or ON. To adjust the mirrors:

1) Move the selector switch to the left or right to select the mirror you wish to adjust.
2) Press the outer part of the switch that corresponds to the direction in which you wish to move the mirror.
3) Return the selector switch to the center position to help prevent unintended adjustment.

⚠ WARNING

If you adjust the outside rearview mirrors while driving, you could lose control of the vehicle, resulting in an accident.
Adjust the outside rearview mirrors before driving.

Outside rearview mirror folding switch (if equipped)

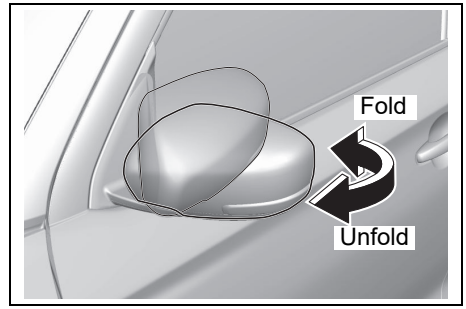

69T020070

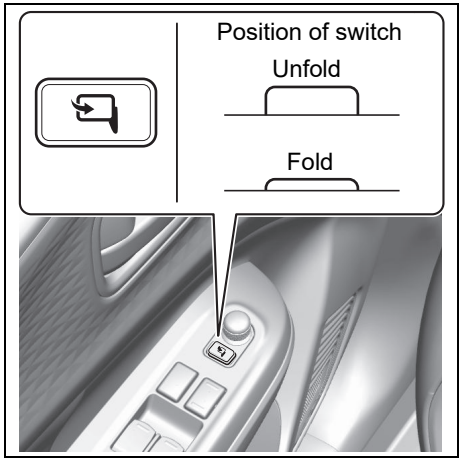

69T020080

You can fold the mirrors when you park the vehicle in a narrow space. Push the folding switch to fold and unfold the mirrors. Make sure the mirrors are completely unfolded before you start driving.

⚠ WARNING

If you drive the vehicle with the outside rearview mirrors folded, it may result in an accident.
Do not drive the vehicle with the outside rearview mirrors folded.

⚠ CAUTION

Moving mirrors can pinch and injure a hand. Do not allow anyone's hand to get near the mirrors when folding and unfolding the mirrors.

Heated outside rearview mirror switch

Refer to "Heated rear window switch/ heated outside rearview mirror switch" (P.3-32).

Rear seats

Head restraints

Head restraints are designed to help reduce the risk of neck injuries in the case of an accident.

⚠ WARNING

- **If you drive the vehicle with the head restraint removed, a passenger's backward tilting cannot be prevented in a collision from the backward and the impact to a passenger's head cannot be reduced in a sudden braking or a collision. This may cause severe injury.**
  Never drive the vehicle with the head restraints removed.
- **If the head restraint is installed back to front or it is not installed securely, the head restraint may not provide the best performance in case of emergency, resulting in severe injury.**
  If the head restraint is installed back to front, you cannot adjust the height and install it securely.
  Make sure to install the head restraint securely in the right direction.

(Continued)

⚠ WARNING

(Continued)

- **Being distracted by head restraint adjustment could lead to an accident.**
  Do not attempt to adjust the head restraint while driving.
- **If you try to install a child restraint system and it touches the head restraint, a child may be severely injured in a collision.**
  When you install a child restraint system, adjust the height of the head restraint as high as possible or remove the head restraint for avoiding that the child restraint system touches the head restraint.

⚠ CAUTION

If you leave the removed head restraint in the vehicle, it may jump out and hit passengers or objects, resulting in injury or damage.
Do not leave the removed head restraint in the vehicle.

NOTE:
It may be necessary to fold forward the seatback to provide enough overhead clearance to remove the head restraint.

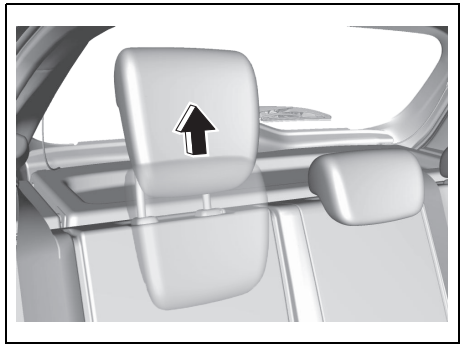

69T020090

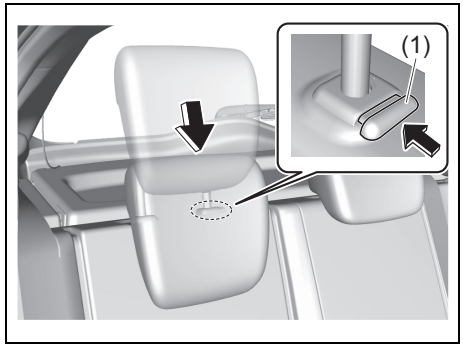

69T020100

To raise the rear head restraint, pull upward the head restraint until it clicks. To lower the head restraint, push down the head restraint while holding in the lock button (1). If a head restraint must be removed (for cleaning, replacement, etc.), push in the lock button (1) and pull the head restraint all the way out.

When installing a child restraint system, adjust the height of the head restraint or remove it for fitting the child restraint system, as necessary.

Rear center head restraint

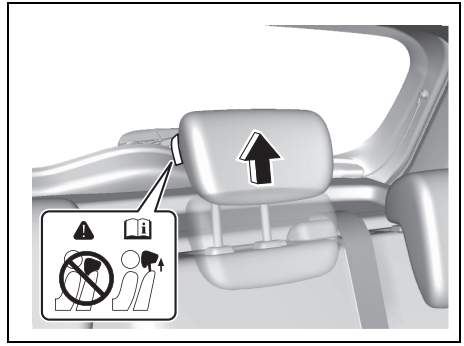

69T020110

When using the rear center head restraint, pull it up and lock it securely before driving.

⚠ WARNING

Do not allow anyone to sit in the rear center seat with the rear center head restraint removed or in stowed position.

Folding rear seats

The rear seats of your vehicle can be folded forward to provide additional cargo space.

To fold the rear seats forward:

1) Lower the head restraint fully.

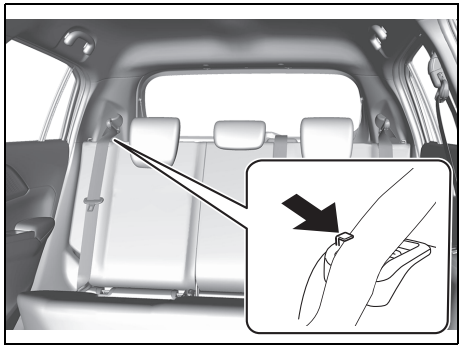

69T020120

2) Hook the webbing of the outboard lap-shoulder belts in the belt hangers.

⚠ WARNING

When you move a seatback, make sure the belt webbing is hooked in the seat belt hangers so the seat belts are not caught by the seatback, seat hinge, or seat latch. This helps prevent damage to the belt system.

NOTICE

Make sure the belt webbing is not twisted.

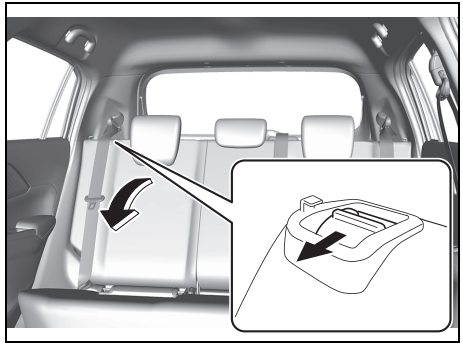

69T010140

3) Pull the release lever on the top of each split seat, and fold the seatbacks forward.

⚠ WARNING

If you need to carry cargo in the passenger compartment with the rear seatback folded forward, secure the cargo or it may be thrown about, causing injury. Never pile cargo higher than the seatbacks.

NOTICE

After folding the rear seatback forward, do not allow any foreign material to enter the lock opening. This may cause damage to the inside of the lock and prevent the seatback from being locked securely.

To return the seat to the normal position, follow the procedure below.

⚠ WARNING

When you move a seatback, make sure the belt webbing is hooked in the seat belt hangers so the seat belts are not caught by the seatback, seat hinge, or seat latch. This helps prevent damage to the belt system.

⚠ CAUTION

When returning the rear seatback to the normal position, be careful that your finger is not caught between the lock and the striker.

NOTICE

When returning the rear seatback to the normal position, check that there is nothing around the striker. Any foreign materials prevent the seatback from being locked securely.

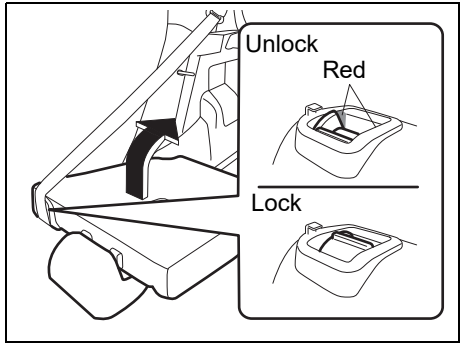

52RM20170

Raise the seatback until it locks into place.

After returning the seat, move the seatback back and forth to check if it is securely latched.

⚠ CAUTION

- **Do not put your hand into the rear seatback lock opening, or your finger may get caught and be injured.**
- **After securing the rear seatback, check that it is locked securely. If it is not, red will appear in the release lever.**

NOTICE

- **When returning the rear seatback to the normal position, do not allow any foreign material to enter the lock opening. This may prevent the seatback from being locked securely.**
- **When returning the rear seatback to the normal position, handle it carefully by hand to avoid any damage to the lock itself. Do not push it by using some material or by applying excessive force.**
- **As the lock is designed exclusively for securing the rear seatback, do not use it for any other purpose. Incorrect use of it may cause damage to the inside of the lock and prevent the seatback from being locked securely.**

NOTE:
After returning the rear seatback, check that the seat belts are not twisted or caught in the rear seatback.

Safety for child

For safety, carefully drive at lower speed than usual.

Place a child in the rear seat

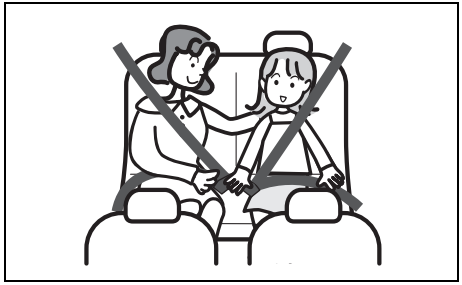

51K0188

- Seat a child next to an adult when possible, and ensure that the child can be visually monitored.
- If a child sits in a front passenger's seat, the driver might become distracted by the child's movements, or the child might become mischievous, which could result in driving hindrance.
- Select an appropriate child restraint system suitable for the child's age and physical size.

⚠ WARNING

- **If you do not use the child-proof lock, a child may open a door and the child may be thrown out, resulting in severe injury. To avoid this, use the child-proof lock setting.**
- **When it is necessary to seat the child who does not need a child restraint system in the front passenger's seat, observe the following point.**
  - **Slide the front passenger's seat all the way back. If the front passenger's seat is in a forward position, there is a risk of serious injury due to major impact if the front passenger's seat airbag was to be deployed.**

(Continued)

⚠ WARNING

(Continued)

59RN04650

- **If a child put a hand out of the window or lean on a door, the child may get severe injury by a strong impact of side or curtain airbag activation.**
  Do not allow a child to put hand out of the window or lean on a door.

- **Do not allow the hands or feet, etc., of a child near movable parts inside a vehicle, such as the armrests and the seat rails. Otherwise, there is the possibility of injury.**

A child needs to wear seat belt

⚠ WARNING

69RHS159

- **Do not drive with a child on your lap. Even if you hold the child tightly, proper support is not possible, and in the event of a collision, etc., the child may get serious injury.**
- **If a child does not wear a seat belt, in a sudden braking and a collision, the child may get serious injury.**
  Be sure to always have a child wear a seat belt.

(Continued)

⚠ WARNING

(Continued)

- **If two or more people use a single seat belt, in a sudden braking and a collision, the seat belt may not provide the best performance, resulting in severe injury.**
  Do not allow two or more people to use a single seat belt.

(Continued)

⚠ WARNING

(Continued)

69RHS160

- **The seat belts of this vehicle are designed to be suitable for occupants of adult size. If the shoulder strap rests on the neck or chin of a child rather than the shoulder, or if the lap portion of the belt does not rest securely on the hipbone, ensure that the child is seated in a child restraint system placed in the rear seat. Failure to properly use a seat belt may result in serious injury to the child.**
- **Use a child restraint system securely fastened to the rear seat for any child that cannot hold their head upright or sit on their own.**

Do not let a child play with seat belt

⚠ WARNING

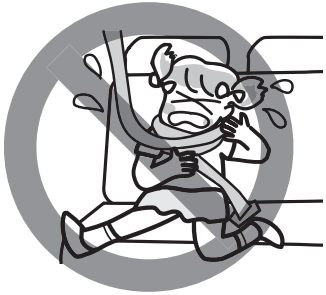

69RHS161

If a child play with a seat belt, for example, if the child's body is wrapped by the seat belt, it may cause severe injury such as suffocation. In case of emergency, cut the seat belt with scissors.

Using the Child Restraint System

Refer to “Securing child restraint system by seat belt” (P.2-43) or “Securing child restraint system by ISOFIX” (P.2-45).

An adult needs to open or close each door or window, and adjust seats

Only an adult should open or close each door or window and adjust seats, not to get a child’s hands, arms, legs or neck, etc. caught in.

⚠ WARNING

69RHS162

- **If the windows are not locked, a child may operate the windows by mistake or the other passengers may be caught in the windows.**
  To avoid unintended operation of the power window by a child, use the window lock switch.

(Continued)

⚠ WARNING

(Continued)

- **If you leave the power window in ready condition, it may cause unintended operation of the power window by a child, resulting in an accident.**
  When you leave the vehicle, make sure to press the engine switch to change the ignition mode to OFF, keep the key with you and leave the vehicle with your child.

Do not let a child stick his/her head or hands out of the window

⚠ WARNING

69RHS163

Ensure that a child does not put their hands or heads, etc., out the windows. Otherwise, serious injuries due to falling out or sudden braking may occur. Moreover, serious injury could also occur if a child were to come into contact with objects outside the vehicle.

Do not leave a child unattended in the vehicle

⚠ WARNING

69RHS164

When getting out of the vehicle, do not allow a child to stay in the vehicle without you.

- **Unintended and wrong operations by a child may cause a fire or an accident from the vehicle start.**
- **As the inside temperature of the vehicle will become hot under the blazing sun, a child may suffer from heat stroke or dehydration, resulting in severe health problems or death in the worst case. Even if you turn on the air conditioner, do not leave a child alone in the vehicle.**

Do not place a child in ,.luggage compartment

⚠ WARNING

69RHS165

The luggage areas do not feature a structure that can accommodate people. Do not allow a child to ride in such areas. Otherwise, there is the danger of accidents due to sudden braking, etc. Do not let a child play in luggage areas even while the vehicle is stopped on the road.

Seat belt

A child needs to wear seat belt

Refer to “Safety for child” (P.2-15).

Information for pregnant woman and the sick person

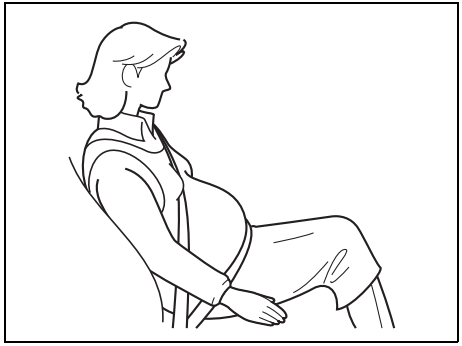

69RHS166

⚠ WARNING

- **Those that are pregnant or sick/disabled must also wear their seat belts. However, in the event of a collision, there is the danger of heavy pressure focused on certain body areas. Consultation with a physician is recommended.**
- **For those that are pregnant, ensure that the lap portion of the belt is as low as possible across the pelvis, avoiding to touch the abdomen. Make sure that the shoulder strap rests halfway between the shoulder and the base of the neck, crossing the chest and avoiding to touch the abdomen.**

Lap-shoulderbelt

Emergency Locking Retractor (ELR)

The seat belt has an emergency locking retractor (ELR), which is designed to lock the seat belt only during a sudden stop or impact. It also may lock if you pull the belt across your body very quickly. If this happens, let the belt go back to unlock it, and then pull the belt across your body more slowly.

Safety reminder

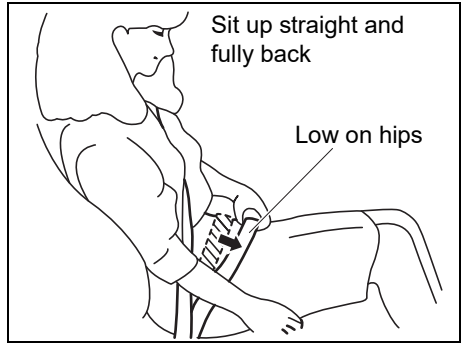

59RN02310

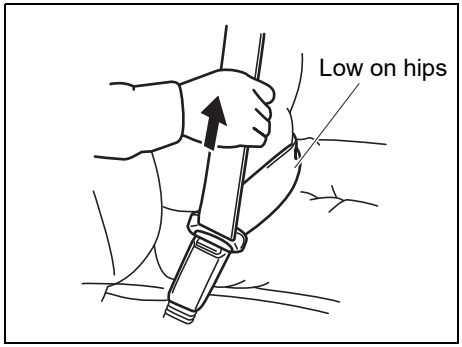

59RN02320

To reduce the risk of sliding under the belt during a collision, position the lap portion of the belt across your lap as low on your hips as possible and adjust it to a snug fit by pulling the shoulder portion of the belt upward through the latch plate. The length of the diagonal shoulder strap adjusts itself to allow freedom of movement.

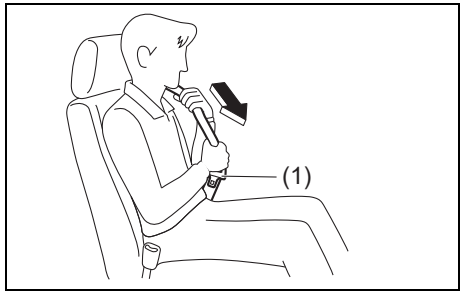

83SH02080

Holding the tongue plate (1) and the seat belt, pull out the seat belt slowly to straighten the twisted seat belt.

NOTE:
When the seat belt is locked and you cannot pull it out, release it once and then pull it out again. If you still cannot pull it out, pull the seat belt strongly, release it and then pull it out again slowly.

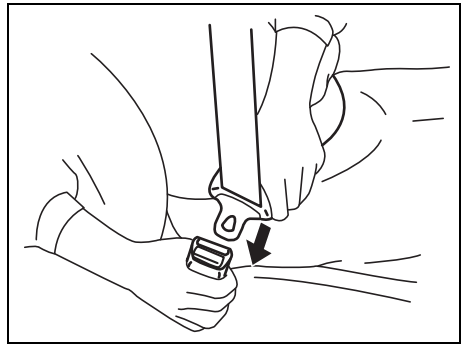

59RN02330

To fasten the seat belt, sit up straight and far back into the seat, pull the latch plate attached to the seat belt across your body and press it straight into the buckle until you hear a click. After pressing the latch plate into the buckle, pull the seat belt to make sure it is securely latched.

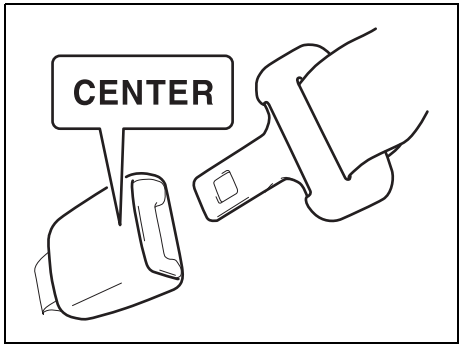

80J2008

NOTE:
The word "CENTER" is marked on the buckle for the rear center belt. The buckles are designed so a latch plate cannot be inserted into the wrong buckle.

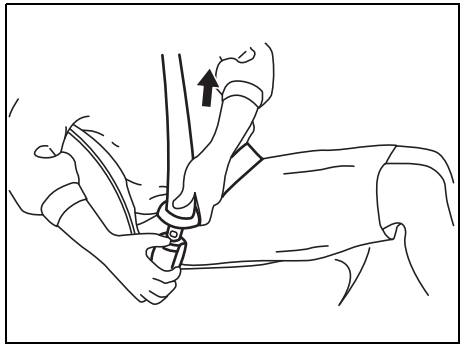

59RN02340

To unfasten the seat belt, push the red "PRESS" button on the buckle and retract the belt slowly while holding the belt or/and the latch plate.

Adjustment of seat belt length

The seat belt does not require length adjustment. The seat belt extends and retracts according to the movement of the body. If the seat belt gets a strong impact, the belt locks its tension automatically, in order to secure the body.

Shoulder anchor height adjuster (only for front seat)

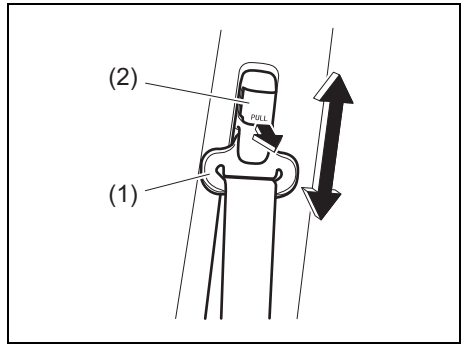

59RN02420

Adjust the shoulder anchor height so that the shoulder belt rides on the center of the outboard shoulder. To move upward, slide the anchor (1) up. To move downward, slide the anchor down while pulling the lock knob (2) out. After adjustment, make sure that the anchor is securely locked.

⚠ WARNING

Be sure that the shoulder belt is positioned on the center of the outside shoulder. The belt should be away from your face and neck, but not falling off your shoulder. Misadjustment of the belt could reduce the effectiveness of the safety belt in a collision.

Correct use of seat belt

⚠ WARNING

Use the seat belt correctly. Otherwise, in a sudden braking or a collision, the body may not be restrained, resulting in severe injury. Observe the following points.

- **If the seat belt is twisted or contains excessive slack, there is danger of heavy pressure focused on certain body areas.**
- **If the seat belt rests on the abdomen, this area may sustain heavy pressure when you get a strong impact.**
- **If the seat belt does not rest firmly over the shoulder, you may be thrown forward when you get a strong impact.**

Seat belt reminder

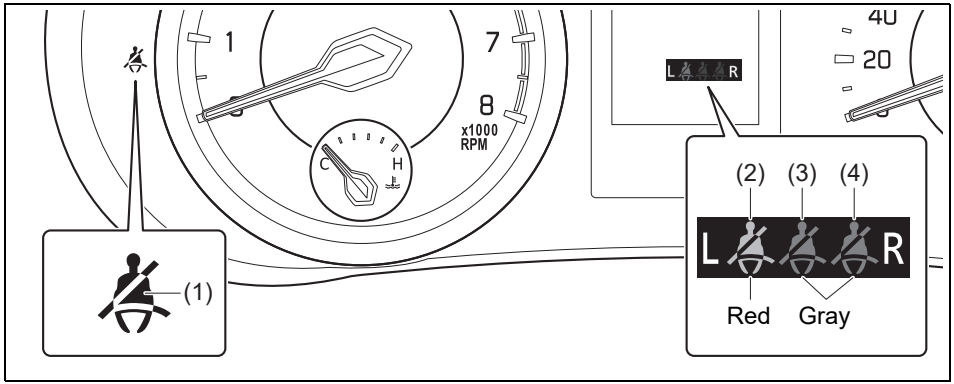

69T020140

(1) Driver's seat belt reminder light / front passenger's seat belt reminder light
(2) Rear passenger's seat belt reminder light (rear left)*1
(3) Rear passenger's seat belt reminder light (rear center)*2
(4) Rear passenger's seat belt reminder light (rear right)*2

*1 This symbol represents that the seat belt is unfastened.
*2 This symbol represents that the seat belt is fastened.

When the driver and/or passenger(s) do not fasten their seat belts, the seat belt reminder lights will come on or blink and a buzzer will sound to remind the driver and/or passenger(s) to fasten their seat belts. For more details, refer to the explanation below.

⚠ WARNING

It is absolutely essential that the driver and passengers fasten their seat belts at all times. Persons who are not fastening seat belts have a much greater risk of injury if an accident occurs. Make a regular habit of buckling your seat belt before pressing the engine switch.

Driver's seat belt reminder

If the driver's seat belt remains unbuckled when the engine switch is pressed to change the ignition mode to ON, the reminder works as follows:

1) The driver's seat belt reminder light will come on.
2) After the vehicle's speed has reached about 15 km/h, the driver's seat belt reminder light will blink and a buzzer will sound for about 95 seconds.
3) The reminder light will remain on until the driver's seat belt is buckled.

If the driver has buckled his or her seat belt and later unbuckles the seat belt, the reminder system will be activated from Step 1) or 2) according to the vehicle's speed. When the vehicle's speed is less than 15 km/h, the reminder will start from Step 1). When the vehicle's speed is more than 15 km/h, the reminder will start from Step 2).

The reminder will be automatically canceled when the driver's seat belt is buckled or the engine switch is pressed to change the ignition mode to LOCK (OFF).

Front passenger's seat belt reminder

If there is a person sitting in the front passenger seat and the front passenger seat belt is unbuckled when the engine switch is pressed to change the ignition mode to ON, the front passenger's seat belt reminder will activate. The front passenger's seat belt reminder works in the same manner as the driver's seat belt reminder.

NOTICE

The sensor of the front passenger's seat belt reminder is located in the seat cushion. Therefore, if you spill liquid such as liquid aromatics, soft drinks or juice on the front passenger's seat cushion, immediately wipe it dry with a soft cloth. Otherwise, the sensor of the front passenger's seat belt reminder can be damaged.

NOTE:

- *If you put an object on the passenger's seat, the weight of the object will be sensed by the sensor and the front passenger's seat belt reminder light will come on and then the interior buzzer may beep.*
- *If a child or a small sized person sit on the front passenger's seat or the cushion is put on the front passenger's seat, the weight will not be sensed by the sensor and the interior buzzer may not beep.*

Rear passenger's seat belt reminder

If the engine switch is pressed to change the ignition mode to "ON", the seat belt reminder light of all rear passengers lights for irrespective of the presence or absence of passenger. When the vehicle speed reaches 15 km/h or more, the seatbelt reminder will turn off about 65 seconds later.

Also, when opening the rear seat door the rear passenger 's seat belt reminder lights will also be lit.

In the following situations, rear passenger's seat belt reminder light blinks for about 65 seconds, and the buzzer sounds for about 35 seconds at the same time. After 30 seconds have elapsed from the stop of the buzzer, the corresponding indicator will switch from blinking to lighting.

- When the rear seat belt is removed while driving at a vehicle speed of 15 km/h (9 mph) or more.
- When the vehicle speed reaches 15 km/h (9 mph) or more after the rear seat belt has been removed with no rear door open.

The reminder will be automatically canceled when the rear seat belt is buckled or the engine switch is pressed to change the ignition mode to LOCK (OFF).

Handling and care for seat belt

Seat belt handling

69T020150

Periodically check if the seat belts work properly and are not damaged. Check the webbing, buckles, latch plates, retractors, anchorages and guide loops. Replace any seat belts which do not work properly or are damaged.

⚠ WARNING

- **Inspect all seat belt assemblies after any collision. Any seat belt assembly which was in use during a collision (other than a very minor one) should be replaced, even if damage to the assembly is not obvious. Any seat belt assembly even which was not in use during a collision must be replaced if the seat belt pretensioners were activated. The pretensioners and the load limitter only function once. In case they did not activate, consult with an authorized SUZUKI dealer or a qualified workshop.**
- **If frays, scratches, cuts are found on the seat belt, replace it with a new one.**
- **If the buckle does not work properly, ask an authorized SUZUKI dealer or a qualified workshop for inspection.**
- **If strong force was applied to the seat belt in a collision, the seat belt function may be damaged, even though its appearance is normal. Replace the seat belt with a new one.**

(Continued)

⚠ WARNING

(Continued)

- **As the seat belt may not provide the best performance and it may result in severe injury in case of emergency, observe the following points.**
  - **When foreign material enters into the buckle or you spill a drink, the seat belt may not work properly. In this case, ask an authorized SUZUKI dealer or a qualified workshop for inspection.**
  - **As the seat belt may be damaged, be careful not to get the seat belt caught in the door. Before closing the door, check that the seat belt is retracted without any slack.**
  - **Do not modify or remove the seat belt.**

Seat belt hanger

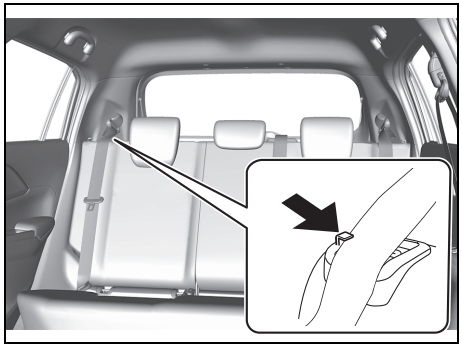

69T020120

⚠ WARNING

When you move a seatback, make sure the belt webbing is hooked in the seat belt hangers so the seat belts are not caught by the seatback, seat hinge, or seat latch. This helps prevent damage to the belt system.

Seat belt care

Caring for seat belts is the same as caring for any type of regular cloth material, etc.

⚠ WARNING

Do not use bleach, solvent or dyes on seat belts. Doing so may cause stains, discoloration and strength deterioration, and the seat belt may not function properly.

Seat belt pretensioner system

Vehicle with lap outer pretensioner

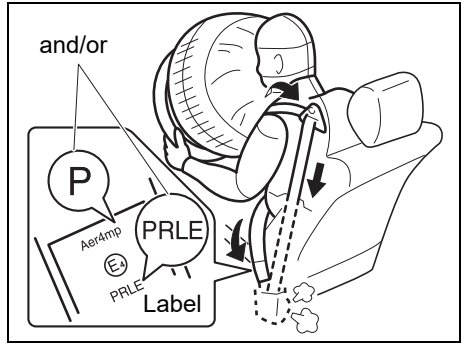

69T020330

Vehicle without lap outer pretensioner

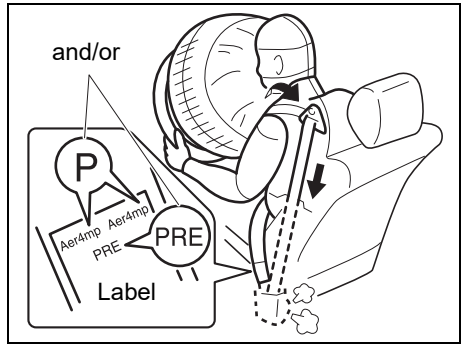

69T020340

⚠ WARNING

This section describes your SUZUKI vehicle's seat belt pretensioner system. Read and follow all these instructions carefully to minimize your risk of severe injury or death.

To determine if your vehicle is equipped with a seat belt pretensioner system at the front or rear seating positions, check the label on the seat belt at the bottom part. If the letters "p", "PRLE" and/or "PRE" appear as illustrated, your vehicle is equipped with the seat belt pretensioner system. You can use the pretensioner seat belts in the same manner as ordinary seat belts.
Read this section and "Supplemental Restraint System (airbags)" section to learn more about the pretensioner system.

The seat belt pretensioner system works with the supplemental restraint system (airbags). The crash sensors and the electronic controller of the airbag system also control the seat belt pretensioners. The pretensioners are triggered only when there is a frontal or side collision severe enough to trigger the airbags and the seat belts are fastened. For precautions and general information including servicing the pretensioner system, refer to "Supplemental Restraint System (airbags)" (P.2-49) in addition to this "Seat belt pretensioner system" section, and follow all those precautions.

The pretensioner is located in each seat belt retractor and driver's seat belt anchorage (vehicle with lap outer pretensioner). The pretensioner tightens the shoulder seat belt so the belt fits the occupant's body more snugly in the event of a frontal or side collision. For vehicle with lap outer pretensioner, tightens the waist belt at the same time. The retractors will remain locked after the pretensioners are activated. Upon activation, some noise will occur and some smoke may be released. These conditions are not harmful and do not indicate a fire in the vehicle.

The driver and all passengers must be properly restrained by fastening seat belts at all times, whether or not a pretensioner is equipped at their seating position, to minimize the risk of severe injury or death in the event of a collision.

Sit fully back in the seat; sit up straight; do not lean forward or sideways. Adjust the belt so the lap portion of the belt is worn low across the pelvis, not across the waist. Please refer to "Seat adjustment" (P.2-5) and the instructions and precautions about the seat belts in this "Seat belts and child restraint systems" section for details on proper seat and seat belt adjustments.

Please note that the pretensioners along with the airbags will activate in severe frontal or side collisions. They are not designed to activate in rear impacts, rollovers, or minor frontal side collisions. The pretensioners can be activated only once. If the pretensioners are activated (that is, if the airbags are activated), have the pretensioner system serviced by an authorized SUZUKI dealer or a qualified workshop as soon as possible.

If airbag warning light on the instrument cluster does not blink or come on briefly when the ignition mode is changed to ON, stays on for more than 10 seconds, or comes on while driving, the pretensioner system or the airbag system may not work properly. Have both systems inspected by an authorized SUZUKI dealer or a qualified workshop as soon as possible.

Service on or around the pretensioner system components or wiring must be performed only by an authorized SUZUKI dealer or a qualified workshop who is specially trained. Improper service could result in unintended activation of pretensioners or could render the pretensioner inoperative. Either of these two conditions may result in personal injury.

To prevent damage or unintended activation of the pretensioners, check that the lead-acid battery is disconnected and the ignition mode has been in LOCK (OFF) for at least 90 seconds before performing any electrical service work on your SUZUKI vehicle.

Do not touch pretensioner system components or wiring. The wires are wrapped with yellow tape or yellow tubing, and the couplers are yellow. When scrapping your SUZUKI vehicle, ask an authorized SUZUKI dealer or a qualified workshop, body repair shop, or scrap yard for assistance.

For proper operation of seat belt pretensioner system

Do not modify any parts that can affect the functionality of the seat belt pretensioner system. The seat belt may be retracted unexpectedly, or it may not be properly retracted when necessary.

Disposal and scrapping

Seat belt pretensioners that have not been activated must be activated according to the predetermined procedure before disposal.

⚠ WARNING

If you do not handle a pretensioner properly for disposal, the pretensioner system may activateunexpectedly, resulting in severe injury.
When disposing of a pretensioner or scrapping the vehicle equipped with a pretensioner, consult an authorized SUZUKI dealer or a qualified workshop.

Seat belt force limiter system

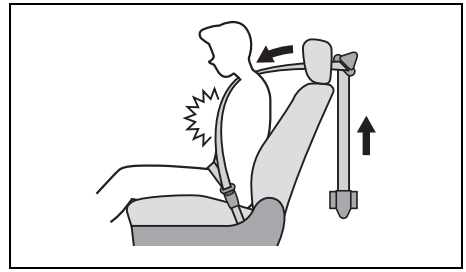

69RHS167

Front seat
In the event of a strong impact coming from the front, the seat belt force limiter operates in two stages to reduce a force to the shoulder strap, thus lessening the impact being sustained by the front passengers.

Rear seat
In the event of a strong impact coming from the front, the seat belt force limiter operate to reduce a force to the shoulder strap, thus lessening the impact being sustained by the rear passengers.

⚠ WARNING

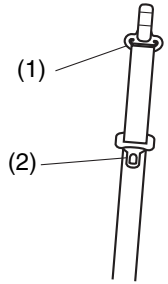

82K179

If the seat belt sustains strong impact, the resin of the shoulder anchor part (1) and the tongue plate part (2) could soften due to heavy friction, thus sticking to the seat belt, making the belt slide less easily. In such a case, the seat belt may not provide the best performance, resulting in severe injury in case of emergency. Have the seat belt replaced by an authorized SUZUKI dealer or a qualified workshop.

Child restraint systems

Child restraint system usage

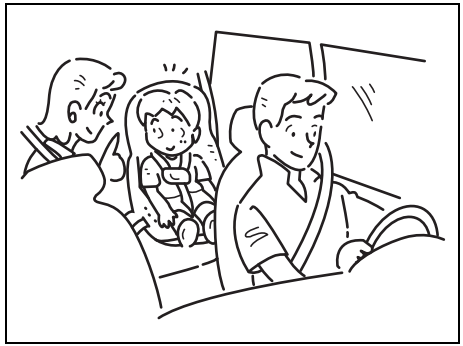

59RN02280

The following types of child restraint system are available generally.

Infant restraint

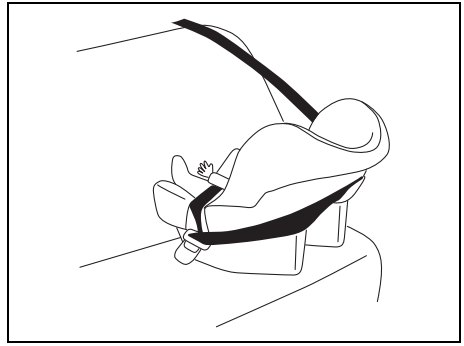

80JC007

Child restraint

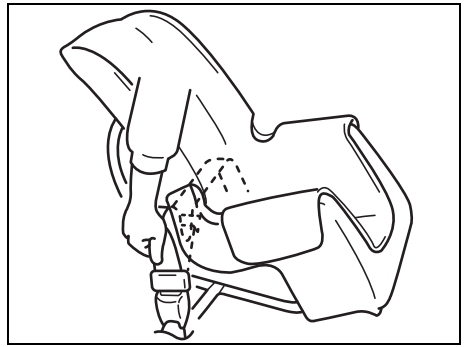

59RN02350

Booster seat

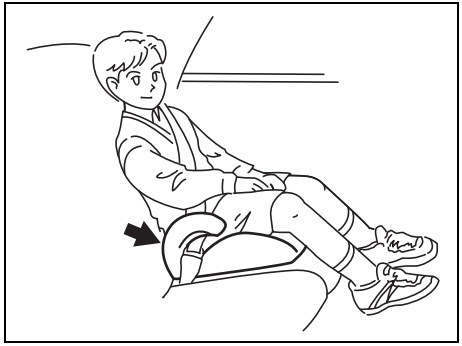

59RN02290

SUZUKI highly recommends that you use a child restraint system to restrain infants and small children. Many different types of child restraint systems are available; check that the restraint system you select meets applicable safety standards.

All child restraint systems are designed to be secured in vehicle seats either by seat belts (lap belts or the lap portion of lap-shoulder belts) or by special rigid lower anchor bars built onto the floor. Whenever possible, SUZUKI recommends that child restraint systems be installed on the rear seat. According to accident statistics, children are safer when properly restrained in rear seats than in the front passenger seat.

If you must use a front-facing child restraint in the front passenger's seat, adjust the passenger's seat as far back as possible.

NOTE:
Observe any statutory regulation about child restraints.

⚠ WARNING

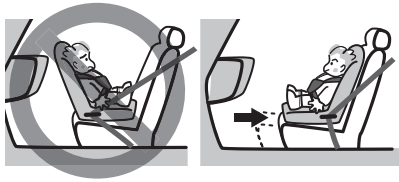

59RN02250

- **(Vehicle without the front passenger airbag deactivation system)**
  Do not install a rear-facing child restraint in the front passenger's seat. If the passenger's front airbag inflates, a child in a rear-facing child restraint could be killed or severely injured. The back of a rear-facing child restraint would be too close to the inflating airbag.

(Continued)

⚠ WARNING

(Continued)

- **(Vehicle with the front passenger air-bag deactivation system)**
  When using a child restraint system on the front passenger's seat, the front passenger's airbag system must be deactivated; otherwise deployment of the front passenger's airbag could result in the death or serious injury of the child.
- **When installing a child restraint system to the rear seat, touching the child's foot or the child restraint system to the seatback of the front seat can cause serious injury to the child in the event of an accident.**
  Adjust the front seat so that it does not touch the child or the child restraint system.
- **If child restraint systems are not installed properly, children or other occupants could be seriously injured in the event of an accident. Secure the child restraint system firmly according to both this manual and the instruction provided by child restraint system's manufacturer.**

(Continued)

⚠ WARNING

(Continued)

- **If the child is not secured properly in the child restraint system, it could cause serious injury to the child in the event of an accident. Use the child restraint system correctly following the instruction provided by child restraint system's manufacturer.**
- **If you recline the seatback, a child restraint system may not be secured properly and a child body may slip beneath the seat belt. This may cause severe injury.**
  Do not recline the seatback when a child restraint system is installed on the seat.
- **If you use the child restraint system which was severely damaged by an accident, etc., it may not provide the best performance. This may cause severe injury to a child.**
  If the child restraint system was severely damaged by an accident, etc., do not reuse the child restraint system even though its appearance looks normal.

Selecting an appropriate child restraint system

Please carefully read this part regarding child restraint systems and choose an appropriate seat for the child's age and physical size.

Certification mark of child restraint system to comply with UN R44/R129 standard

The following certification mark is displayed on the child restraint system conforming to the UN R44*1/R129*1 standard.

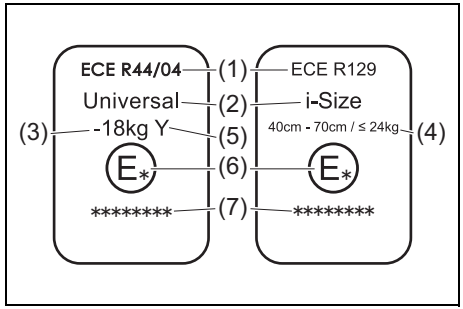

77R30470

(1) Regulation number*2
(2) Child restraint system category*3
(3) Weight range of the applicable child who is applicable for this certification mark as shown in the mark
(4) Height range and weight range of the applicable child who is applicable for this certification mark in the mark
(5) Device specification
(6) Country code that authorized the child restraint system
(7) Authorization number of the child restraint system

- This certification mark is a representative example.

*1: UN R44/R129 means the international regulation for the child restraint system.
*2: For “ECE” shown in the certification mark of the child restraint system, ECE standards are the same as those for the UN standards.
*3 “Universal” means that the child restraint system is approved for installation in all categories.

NOTE:
SUZUKI genuine child restraint system for this vehicle complies with the UN R44/R129 standard.

How to understand the table of vehicle handbook information on child restraint systems installation suitability for various seating positions

Mass Groups

- Child restraint systems meeting the UN R44 standard are classified into the following five types.

Mass Group	Child Weight
Group 0	Up to 10 kg
Group 0+	Up to 13 kg
Group I	9–18 kg
Group II	15–25 kg
Group III	22–36 kg

- Typical child restraint systems are specified as follows:

Baby seat

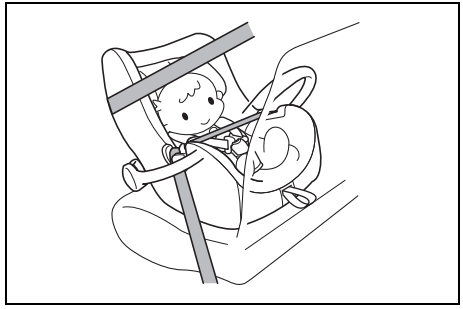

64L30810

A baby seat for rear-facing or sideways-facing use, for babies that cannot yet support their own heads or who cannot sit properly by themselves; this type corresponds to Group 0 and Group 0+ of the UN R44 standard.

Child seat

64L30820

A child seat with a front-facing configuration, used for children for which the shoulder strap of a regular seat belt rests on the neck or chin rather than the shoulder, or the lap portion of the belt cannot yet securely rest on the hipbone; this type corresponds to Group I of the UN R44 standard.

Junior seat

64L30830

A junior seat with a front-facing configuration, used for a child for which the shoulder strap of a regular seat belt rests on the neck or chin rather than the shoulder, or the lap portion of the belt cannot yet securely rest on the hipbone; this type corresponds to Group II and Group III of the UN R44 standard.

Child restraint systems installation suitability for each seat position (for the vehicle with airbag deactivation switch)

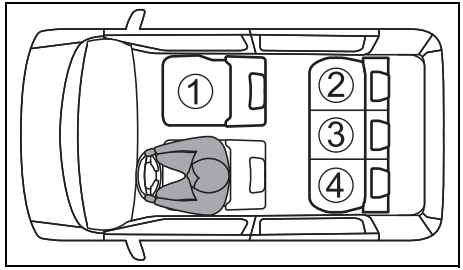

83RS034

NOTE:
The above illustration shows Left hand drive vehicle.
Seat position number of ①, ②, ③ and ④ is same as Left handle drive vehicle for Right handle drive vehicle.
① Front passenger's seat
② Rear seat right side
③ Rear seat center
④ Rear seat left side

① (#1, #2, #3)	Front Passenger airbag is activated	☒
	Front Passenger airbag is deactivated	U
② (#3, #4)	U	
③ (#3, #4)	U	
④ (#3, #4)	U	

U — It is suitable for universal category of child restraint system fixed with the vehicle seat belt.

It is suitable for i-Size and ISOFIX child restraint system.

This seat is equipped with Top tether anchorage point.

Never use a rear-facing child restraint system on the passenger seat.

It is not suitable for child restraint system.

#1: Move the front seat fully rearward.
#2: When you install a forward-facing child restraint, if there is a gap or space between the child restraint and the seatback, adjust the seatback angle in order to install the child restraint system properly.
#3: If the head restraint interferes with the child restratint system, adjust the height of the head restraint or remove it, as necessary.
#4: If there is a gap or space between the child restraint system and the seatback, put cushions, etc. into it in order to install properly.

Detailed information for child restraint system

Seat position number	Seating position				
	①		②	③	④
	Front Passenger airbag is activated	Front Passenger airbag is deactivated			
Seating position suitable for universal belted (YES/NO)	NO	YES	YES	YES	YES
i-Size seating position (YES/NO)	NO	NO	YES	NO	YES
Seating position suitable for lateral fixture (L1/L2)	NO	NO	X	NO	X
Suitable rear-facing fixture (R1/R2X/R2/R3)	NO	NO	R1, R2 (#1) R2X (#2) R3 (#1, #3)	NO	R1, R2 (#1) R2X (#2) R3 (#1, #3)
Suitable front-facing fixture (F2X/F2/F3)	NO	NO	F2,F3 (#1) F2X (#2)	NO	F2,F3 (#1) F2X (#2)
Suitable booster fixture (B2/B3)	NO	B2, B3	B2, B3	B2, B3	B2, B3

#1 Pull upward the head restraint until it clicks.
#2 Remove the head restraint.
#3 The front seat should be positioned between foremost and 9 notches rearward of foremost position.

Key of letters to be inserted in the above table
YES =Suitable for this seating position
NO = Not suitable for this seating position
X =ISOFIX position is not suitable for ISOFIX child restraint systems in this fixture.

The child restraint system can be used in the seating positions for fixture shown in the above table.
For child restraint system fixtures, confirm the table of next page.

If your child restraint system has no size class (or if you cannot find information in the following table), refer to the child restraint system suitability information for the vehicle or ask the retailer of your child seat.

ISOFIX child restraint systems are shown as follows;
ISOFIX child restraint systems are divided into different mass group, size class and fixture.

Mass group	Size class	Fixture	Description
0 (up to 10 kg)	F	L1	Left Lateral facing position Child Restraint Systems (carry-cot)
	G	L2	Right Lateral facing position Child Restraint Systems (carry-cot)
	E	R1	Rear-facing seat
0+ (up to 13kg)	E	R1	Rear-facing seat
	D	R2	Reduced-Size rear-facing toddler Child Restraint Systems
	–	R2X	Reduced-Size rear-facing toddler Child Restraint Systems
	C	R3	Full-Size rear-facing toddler Child Restraint Systems
I (9kg to 18kg)	D	R2	Reduced-Size rear-facing toddler Child Restraint Systems
	–	R2X	Reduced-Size rear-facing toddler Child Restraint Systems
	C	R3	Full-Size rear-facing toddler Child Restraint Systems
	B	F2	Reduced-Height front-facing toddler Child Restraint Systems
	B1	F2X	Reduced-Height front-facing toddler Child Restraint Systems
	A	F3	Full-Height front-facing toddler Child Restraint Systems

Mass group	Size class	Fixture	Description
II (15kg to 25kg)	X	X	–
III (22kg to 36kg)	X	X	–

Key of letters to be inserted in the above table
X = There is no fixture for this mass group.

Booster seat fixtures are shown as follows;

Fixture	Description
B2	Booster seat, reduced width 440 mm
B3	Booster seat, full width 520 mm

Installation suitability of SUZUKI recommendation child restraint systems

Body size	Recommendation of Child restraint system (#A)	Seating position				
		①		②	③	④
		Front Passenger airbag is activated	Front Passenger airbag is deactivated			
40–83 cm ≤ 13 kg (Birth–15 months)	BRITAX RÖMER BABY-SAFE 3 i-SIZE	NO	YES (#1)	YES (#1)	YES (#1)	YES (#1)
76–105 cm ≤ 22 kg (15 months–4 years)	BRITAX RÖMER TRIFIX 2 i-SIZE	NO	NO	YES	NO	YES
100–150 cm (15–36 kg) (3.5 years–12 years)	BRITAX RÖMER KIDFIX M i-SIZE	NO	YES (#1)	YES	YES (#1)	YES

Key of letters to be inserted in the above table
YES = It is suitable for this seating position
NO = It is not suitable for this seating position

#1: Only belted.
#A: These child restraint systems are SUZUKI Genuine Accessory which comply with the R129, refer to the genuine accessories catalog.
However, there are cases that some or all of these child restraint systems are not sold because of nonconformity to the law of your country or other reason.

Child restraint systems installation suitability for each seat position (for the vehicle without airbag deactivation switch)

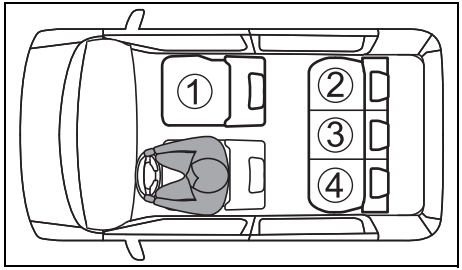

83RS034

NOTE:
The above illustration shows Left hand drive vehicle.
Seat position number of ①, ②, ③ and ④ is same as Left handle drive vehicle for Right handle drive vehicle.
① Front passenger's seat
② Rear seat right side
③ Rear seat center
④ Rear seat left side

① (#1, #2, #3)	U
② (#3, #4)	U
③ (#3, #4)	U
④ (#3, #4)	U

U — It is suitable for universal category of child restraint system fixed with the vehicle seat belt.

It is suitable for i-Size and ISOFIX child restraint system.

This seat is equipped with Top tether anchorage point.

Never use a rear-facing child restraint system on the passenger seat.

It is not suitable for child restraint system.

#1: Move the front seat fully rearward.
#2: When you install a forward-facing child restraint, if there is a gap or space between the child restraint and the seatback, adjust the seatback angle in order to install the child restraint system properly.
#3: If the head restraint interferes with the child restratint system, adjust the height of the head restraint or remove it, as necessary.
#4: If there is a gap or space between the child restraint system and the seatback, put cushions, etc. into it in order to install properly.

Detailed information for child restraint system

Seat position number	Seating position			
	①	②	③	④
Seating position suitable for universal belted (YES/NO)	YES (#1)	YES	YES	YES
i-Size seating position (YES/NO)	NO	YES	NO	YES
Seating position suitable for lateral fixture (L1/L2)	NO	X	NO	X
Suitable rear-facing fixture (R1/R2X/R2/R3)	NO	R1, R2 (#2)	NO	R1, R2 (#2)
		R2X (#3)		R2X (#3)
		R3 (#2, #4)		R3 (#2, #4)
Suitable front-facing fixture (F2X/F2/F3)	NO	F2,F3 (#2)	NO	F2,F3 (#2)
		F2X (#3)		F2X (#3)
Suitable booster fixture (B2/B3)	B2, B3	B2, B3	B2, B3	B2, B3

#1 When installing the child restraint systems, only a front-facing child restraint is suitable.
#2 Pull upward the head restraint until it clicks.
#3 Remove the head restraint.
#4 The front seat should be positioned between foremost and 9 notches rearward of foremost position.

Key of letters to be inserted in the above table
YES =Suitable for this seating position
NO = Not suitable for this seating position
X =ISOFIX position is not suitable for ISOFIX child restraint systems in this fixture.

The child restraint system can be used in the seating positions for fixture shown in the above table.
For child restraint system fixtures, confirm the table of next page.

If your child restraint system has no size class (or if you cannot find information in the following table), refer to the child restraint system suitability information for the vehicle or ask the retailer of your child seat.

ISOFIX child restraint systems are shown as follows;
ISOFIX child restraint systems are divided into different mass group, size class and fixture.

Mass group	Size class	Fixture	Description
0 (up to 10 kg)	F	L1	Left Lateral facing position Child Restraint Systems (carry-cot)
	G	L2	Right Lateral facing position Child Restraint Systems (carry-cot)
	E	R1	Rear-facing seat
0+ (up to 13kg)	E	R1	Rear-facing seat
	D	R2	Reduced-Size rear-facing toddler Child Restraint Systems
	–	R2X	Reduced-Size rear-facing toddler Child Restraint Systems
	C	R3	Full-Size rear-facing toddler Child Restraint Systems
I (9kg to 18kg)	D	R2	Reduced-Size rear-facing toddler Child Restraint Systems
	–	R2X	Reduced-Size rear-facing toddler Child Restraint Systems
	C	R3	Full-Size rear-facing toddler Child Restraint Systems
	B	F2	Reduced-Height front-facing toddler Child Restraint Systems
	B1	F2X	Reduced-Height front-facing toddler Child Restraint Systems
	A	F3	Full-Height front-facing toddler Child Restraint Systems

Mass group	Size class	Fixture	Description
II (15kg to 25kg)	X	X	–
III (22kg to 36kg)	X	X	–

Key of letters to be inserted in the above table
X = There is no fixture for this mass group.

Booster seat fixtures are shown as follows;

Fixture	Description
B2	Booster seat, reduced width 440 mm
B3	Booster seat, full width 520 mm

Securing child restraint system by seat belt

Choose the appropriate seat for the child's age and physical size.

⚠ WARNING

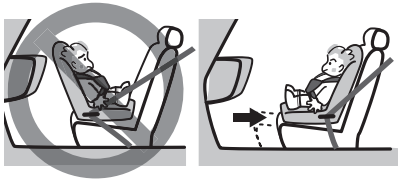

59RN02250

- **(Vehicle without the front passenger airbag deactivation system)**
  Do not install a rear-facing child restraint in the front passenger's seat. If the passenger's front airbag inflates, a child in a rear-facing child restraint could be killed or severely injured. The back of a rear-facing child restraint would be too close to the inflating airbag.

(Continued)

⚠ WARNING

(Continued)

- **(Vehicle with the front passenger air-bag deactivation system)**
  When using a child restraint system on the front passenger's seat, the front passenger's airbag system must be deactivated; otherwise deployment of the front passenger's airbag could result in the death or serious injury of the child.
- **If you install a child restraint system in the rear seat, slide the front seat far enough forward so that the child's feet do not contact the front seatback. This will help avoid injury to the child in the event of an accident.**

⚠ CAUTION

If your vehicle is equipped with the head restraint, adjust the height of the head restraint or remove it for fitting the child restraint, as necessary. However, if a booster cushion not equipped with the head restraint is fitted, the head restraint should not be removed. If the head restraint is removed for fitting the child restraint, you need to install it again after removing the child restraint.
If the child restraint is fitted improperly, a child sitting in it could be injured in a collision.

NOTE:
Stow the removed head restraint in the luggage compartment so it will not cause inconvenience to the occupants.

Securing

⚠ WARNING

If child restraint systems are not installed properly, children or other occupants could be seriously injured in the event of an accident. Secure the child restraint system firmly according to both this manual and the instruction provided by child restraint system's manufacturer.

This section explains securing the child restraint system in the rear seat.

(For model with front passenger airbag deactivation system)
Whenever possible, SUZUKI recommends that child restraint systems be installed on the rear seat. According to accident statistics, children are safer when properly restrained in rear seats than in the front passenger seat.

- If you must install the child restraint system on the front passenger's seat, follow instructions below.
  - Deactivate the front passenger's front airbag by the front passenger airbag deactivation system.
  - Slide the seat to the most rear position by the seat position adjustment lever.
  - If there is a gap or space between the child restraint and the seatback, adjust the seatback angle in order to install the child restraint system properly.
  - If your vehicle is equipped with the seat height adjustment lever, raise the seat to the uppermost position by the seat height adjustment lever.

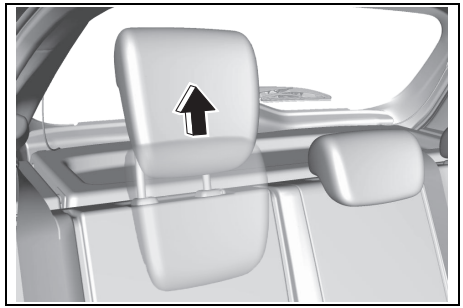

69T020090

1) When the child restraint system contacts the head restraint, adjust the height of the head restraint or remove it for fitting the child restraint system.

⚠ WARNING

- **If the child restraint system contacts the head restraint, the child restraint system cannot be secured firmly. This may cause severe injury to a child in a collision.**
  When installing the child restraint system, adjust the head restraint height to the highest position as much as possible or remove the head restraint so that the child restraint system would not contact the head restraint.
- **If you install a junior seat without a seatback to a seat without a headrest, a child may be severely injured in a collision.**
  When installing a junior seat without a seatback, install a head restraint.

2) Adjust the angle of the seatback so that there is no gap between the child restraint system and the seatback.

3) Make sure that the child restraint system is securely fastened to the main seat.
4) Make sure to pass the seat belt of the passenger's seat through the specified parts, according to the instruction manual that came with the child restraint system.

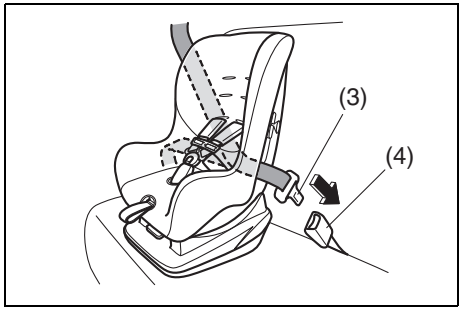

59RN02140

5) Insert the tongue plate (3) firmly into the seat belt buckle (4) until you hear a click.
   - The child restraint system in the above figure is a typical example.

6) Make sure the child seat is installed properly according to the instructions provided by the child restraint system manufacturer.
   - If the child restraint system is not installed properly, consult the retailer where you purchased the child restraint system.

Securing child restraint system by ISOFIX

Securing

⚠ WARNING

If child restraint systems are not installed properly, children or other occupants could be seriously injured in the event of an accident. Secure the child restraint system firmly according to both this manual and the instruction provided by child restraint system's manufacturer.

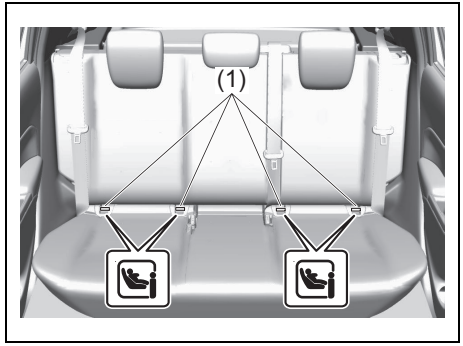

69T020160

(1) Lower anchorages

Your vehicle is equipped with the lower anchorages in the rear seat outboard seating positions for securing a ISOFIX*1 type of child restraints with the connecting bars. The lower anchorages are located where the rear of the seat cushion meets the bottom of the seatback.

Install the ISOFIX type child restraint system according to the instructions provided by the child restraint system manufacturer. After installation, try moving the child restraint system in all directions especially forward to check that connecting bars are securely latched to the anchorages.

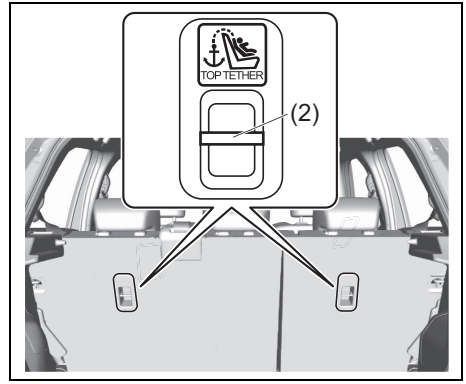

69T020170

(2) Top tether anchorages

Your vehicle is equipped with the top tether anchorages. Use the top tether strap of the child restraint according to the instructions provided by the child restraint system manufacturer.

Here is a general instruction:

⚠ CAUTION

If your vehicle is equipped with the head restraint, adjust the height of the rear head restraint or remove it for fitting the child restraint, as necessary. However, if a booster cushion not equipped with the head restraint is fitted, the head restraint should not be removed. If the head restraint is removed for fitting the child restraint, you need to install it again after removing the child restraint.
If the child restraint is fitted improperly, a child sitting in it could be injured in a collision.

NOTE:
Stow the removed head restraint in the luggage compartment so it will not cause inconvenience to the occupants.

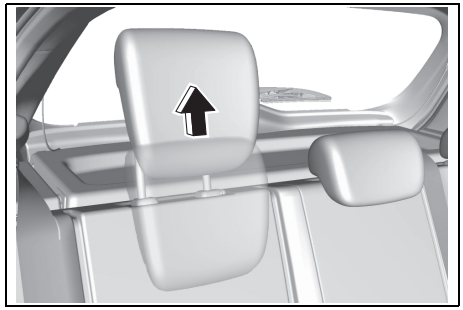

69T020090

1) When the child restraint system contacts the head restraint, adjust the height of the head restraint or remove it for fitting the child restraint system.

⚠ WARNING

- **If the child restraint system contacts the head restraint, the child restraint system cannot be secured firmly. This may cause severe injury to a child in a collision.**
  When installing the child restraint system, adjust the head restraint height to the highest position as much as possible or remove the head restraint so that the child restraint system would not contact the head restraint.

(Continued)

⚠ WARNING

(Continued)

- **If you install a junior seat without a seatback to a seat without a headrest, a child may be severely injured in a collision.**
  When installing a junior seat without a seatback, install a head restraint.

2) Check that the rear seat is securely fixed.

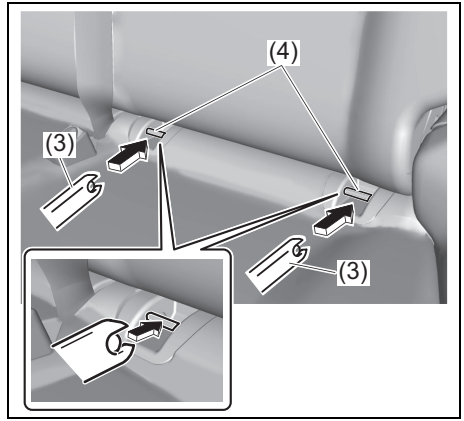

69T020180

3) Place the child restraint in the rear seat, inserting the connecting bars (3) to the lower anchorages (4) between the seat cushion and the seatback.

4) Use your hands to carefully align the connecting bar tips with the anchorages. Take care not to pinch your fingers.

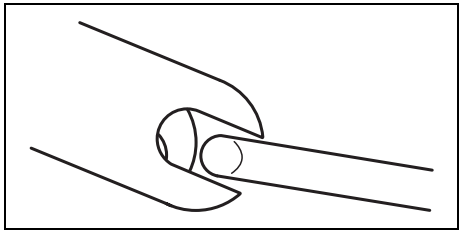

54G184

5) Push the child restraint toward the anchorages so that the connecting bar tips are partially hooked to the anchorages. Use your hands to confirm the position.

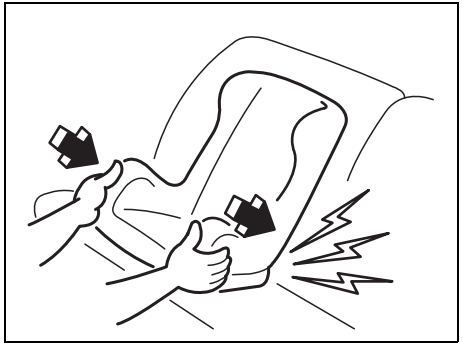

54G185

6) Grasp the front of the child restraint and push the child restraint forcefully to latch the connecting bars. Check that they are securely latched by trying to move the child restraint system in all directions, especially forward.
7) Make sure the child seat is installed properly according to the instructions provided by the child restraint system manufacturer.
   •If the child restraint system is not installed properly, consult the retailer where you purchased the child restraint system.
8) Attach the top tether strap referring to “Installation of child restraint with top tether” section.
   When you put your child in the child restraint system, appropriately slide the front seat forward not to touch a part of your child’s body.

NOTICE

When installing a child restraint system to the rear seat, adjust the front seat position so that the front seat does not interfere with the child restraint system.

Installation of child restraint with top tether

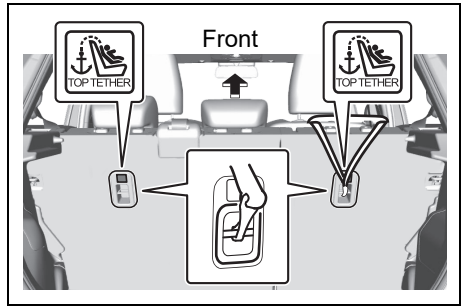

69T020190

Some child restraint systems require the use of a top tether strap. Top tether anchorages are provided in your vehicle at the locations shown in the illustrations.
The number of the top tether anchorage brackets provided in your vehicle depends on the vehicle specification. Install the child restraint system as follows:

1) Secure the child restraint on the rear seat using the procedure described above for securing a restraint system that does not require a top tether strap.

2) Hook the top tether strap to the top tether anchorage and tighten the top tether strap according to the instructions provided by the child restraint system manufacturer. Attach the top tether strap to the corresponding top tether anchorage located directly behind the child restraint. Do not attach the top tether strap to the luggage restraint loops (if equipped).

⚠ WARNING

Do not attach the child restraint top tether strap to the luggage restraint loops. Incorrectly attached top tether strap will reduce the intended effectiveness of the child restraint system.

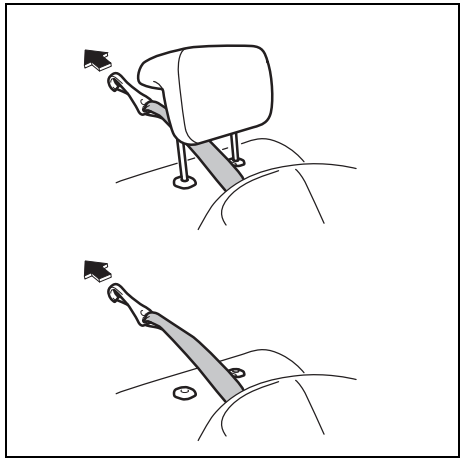

52RS20431

3) When routing the top tether strap, pass the top tether strap as shown in the illustration. (Refer to “Head restraints” (P.2-11) for details on how to adjust the height of head restraint or remove it.)
4) Check that cargo does not interfere with routing of the top tether strap.
5) Make sure the child seat is installed properly according to the instructions provided by the child restraint system manufacturer.
   •If the child restraint system is not installed properly, consult the retailer where you purchased the child restraint system.

⚠ WARNING

If the seat belt, etc. gets stuck in the child restraint system, it may not be secured properly and this may cause severe injury to a child in a collision. When you install the child restraint system, check that obstacles and the seat belt do not exist near the ISOFIX anchorages and the top tether anchorages.

NOTE:
For Australian model, refer to “For Australia” (P.13-1).

Supplemental Restraint System (airbags)

⚠ WARNING

This section describes the protection provided by your SUZUKI vehicle's supplemental restraint system (airbags). Read and follow all instructions carefully to minimize your risk of severe injury or death in the event of a collision.

Your vehicle is equipped with a supplemental restraint system consisting of the following components in addition to a lap-shoulder belt at each seating position.

(1) Side curtain airbag module
(2) Side crash sensor
(3) Driver's front airbag module
(4) Forward crash sensor
(5) Airbag controller
(6) Front passenger's front airbag module
(7) Front seat belt pretensioner
(8) Side airbag module

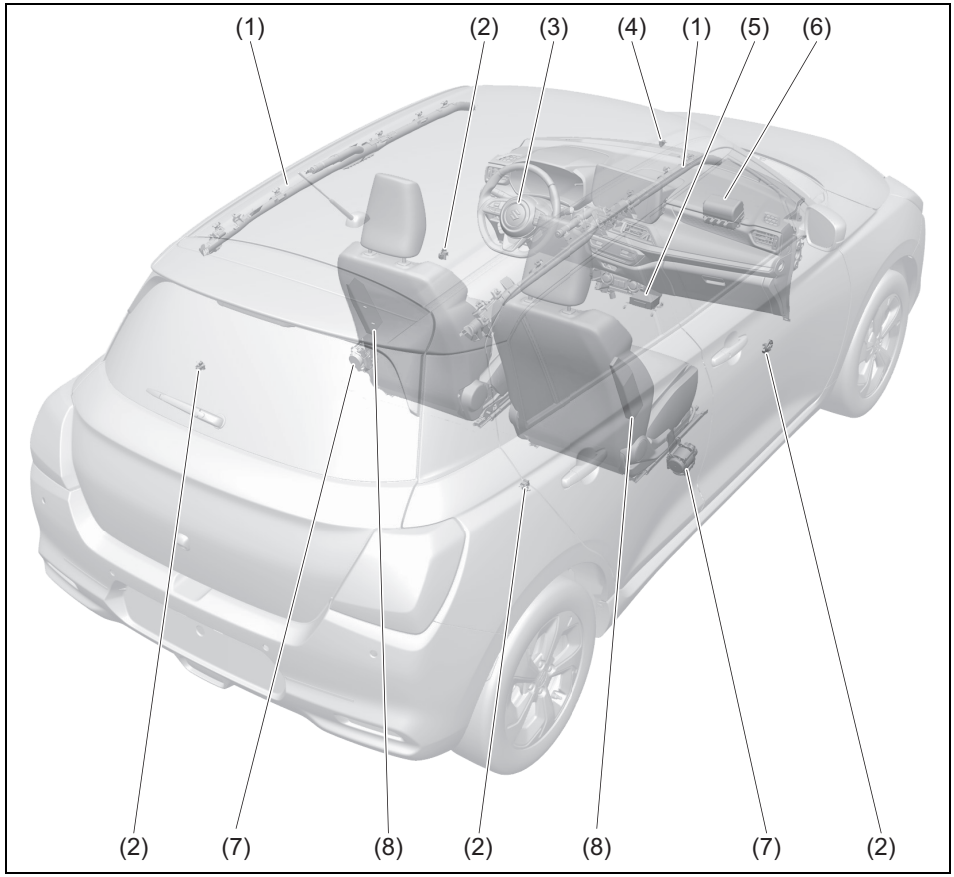

69T020200

What is SRS airbag system?

SRS stands for “Supplemental Restraint System”. This system aims to restrain passengers in their seats for safety.

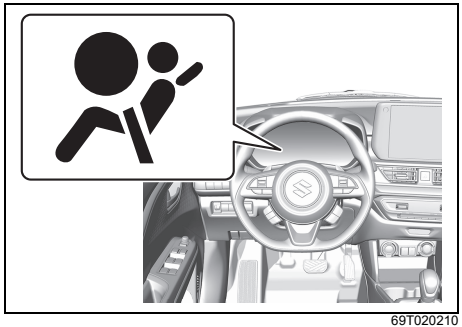

69T020210

If airbag warning light on the instrument cluster does not blink or come on when the ignition mode is first changed to ON, or airbag warning light stays on, or comes on while driving, the airbag system (or the seat belt pretensioner system) may not work properly. Have the airbag system inspected by an authorized SUZUKI dealer or a qualified workshop as soon as possible.

⚠ WARNING

- **SRS airbag system is not a substitute for seat belts. SRS airbag system is the supplemental restraint system and will provide the effectiveness by using the seat belts at the same time.**
  If you and the passengers do not fasten their seat belts, it may result in severe injury in a sudden braking or a collision.
  Even when you drive the vehicle equipped with SRS airbag system, make sure to fasten seat belt.
- **If the seat belts are not fastened properly, airbags may not provide the best performance. This may cause severe injury in a sudden braking and a collision.**
  Make sure that the driver and all the passengers fasten the seat belts properly in a correct posture.

NOTE:
Via the event data recorder (EDR) system, this vehicle records and accumulates data when the airbag is deployed.

Front airbags

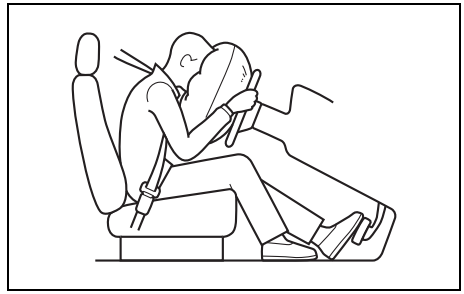

80J090

Front airbags are designed to inflate in severe frontal collisions when the ignition mode is ON.

NOTE:
In a frontal angle collision, the side airbags and side curtain airbags may inflate.

Front airbags are not designed to inflate in rear impacts, side impacts, rollovers or minor frontal collisions, since they would offer no protection in those types of accidents. Since an airbag deploys only one time during an accident, seat belts are needed to restrain occupants from further movements during the accident.

Therefore, an airbag is not a substitute for seat belts. To maximize your protection, always fasten your seat belts. Be aware that no system can prevent all possible injuries that may occur in an accident.

Side airbags and side curtain airbags

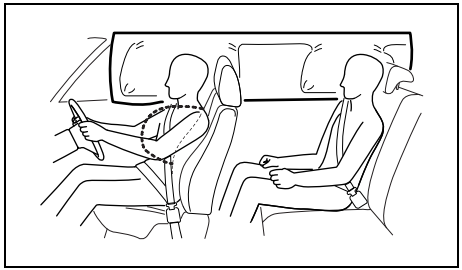

68KM090

Side airbags and side curtain airbags are designed to inflate in severe side impact collisions when the ignition mode is ON.

Side airbags and side curtain airbags are not designed to inflate in frontal or rear collisions, rollovers or minor side collisions, since they would offer no protection in those types of accidents. Only the side airbag and side curtain airbag on the side of the vehicle that is struck will inflate. However, in a frontal angle collision, the side airbags and side curtain airbags may inflate. Since an airbag deploys only one time during an accident, seat belts are needed to restrain occupants from further movements during the accident.
Therefore, an airbag is not a substitute for seat belts. To maximize your protection, always fasten your seat belts. Be aware that no system can prevent all possible injuries that may occur in an accident.

Front passenger airbag deactivation system (if equipped)

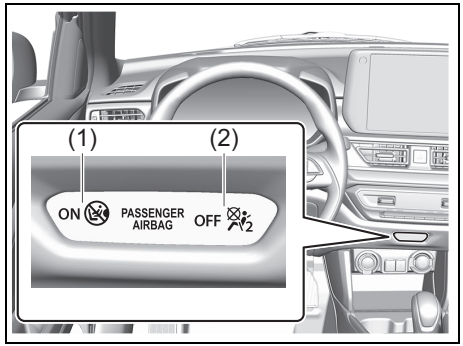

69T020220

The front passenger's front airbag must be deactivated if a child restraint system is to be installed on the front passenger's seat.
When the engine switch is pressed to change the ignition mode to ON, "PASSENGER AIRBAG ON" indicator (1) or "PASSENGER AIRBAG OFF" indicator (2) shows whether the front passenger's airbag is activated or deactivated.

When the front passenger's airbag is activated, both "PASSENGER AIRBAG ON" indicator (1) and "PASSENGER AIRBAG OFF" indicator (2) come on for a few seconds and then go out.
After that, only "PASSENGER AIRBAG ON" indicator (1) comes on for about 1 minute and then goes out.

When the front passenger's airbag is deactivated, both "PASSENGER AIRBAG ON" indicator (1) and "PASSENGER AIRBAG OFF" indicator (2) come on for a few seconds and then go out.
After that, only "PASSENGER AIRBAG OFF" indicator (2) comes on.

When you activate or deactivate the front passenger's airbag, check which indicator is on before starting the engine.

Side airbags, side curtain airbags and seat belt pretensioners are not connected to the airbag deactivation system. Even if the front passenger's airbag is deactivated, side airbags, side curtain airbags and seat belt pretensioners are still activated.

⚠ WARNING

- **Whenever a child restraint system has to be used in the front passenger's seat, regardless of front facing or rear facing, the front passenger's airbag system must be deactivated. Otherwise deployment of the front passenger's airbag could result in the death or serious injury of the child.**
- **Check that the front passenger's airbag is activated and "PASSENGER AIRBAG ON" indicator (1) is on whenever there is no child restraint installed on the front passenger's seat**

According to accident statistics, children are safer when properly restrained in rear seats than in the front passenger seat.

Airbag deactivation switch

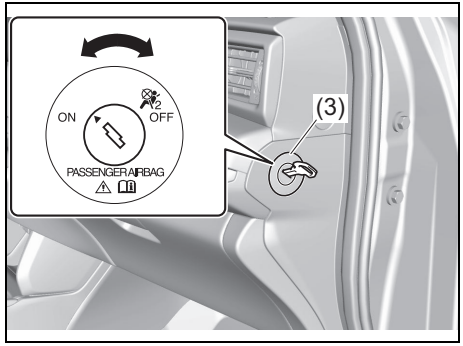

69T020230

The airbag deactivation switch (3) is installed only for use when a front-facing or rear-facing child restraint system or infant restraint system is installed in the front passenger's seat. The switch is located on the lateral face of the passenger's side of the instrument panel.

To deactivate the front passenger's airbag, follow the instructions below before starting the engine.

1) Check that the engine switch is in LOCK (OFF) mode.
2) Insert the key into the airbag deactivation switch (3), then push and turn the key to "OFF" (airbag off) position, and pull out the key.
3) Press the engine switch to change the ignition mode to ON. Both indicators come on for a few seconds and then go out.
   After that, only "PASSENGER AIRBAG OFF" indicator (2) comes on to remind you that the front passenger's airbag is deactivated.

To activate the front passenger's airbag, follow the instructions below before starting the engine.

1) Check that the engine switch is in LOCK (OFF) mode.
2) Insert the key into the airbag deactivation switch (3), then push and turn the key to "ON" (airbag on) position, and pull out the key.
3) Turn the engine switch to change the ignition mode to ON. Both indicators come on for a few seconds and then go out.
   After that, only "PASSENGER AIRBAG ON" indicator (1) comes on for about 1 minute and then goes out to remind you that the front passenger's airbag is activated.

When driving the vehicle with SRS airbag system

Make sure to fasten seat belt

⚠ WARNING

65J106

SRS airbag system is not a substitute for seat belts. SRS airbag system is the supplemental restraint system and will provide the effectiveness by using the seat belts at the same time. If you and the passengers do not fasten their seat belts, it may result in severe injury in a sudden braking or a collision.
Even when you drive the vehicle equipped with SRS airbag system, make sure to fasten seat belt.

Correct sitting posture

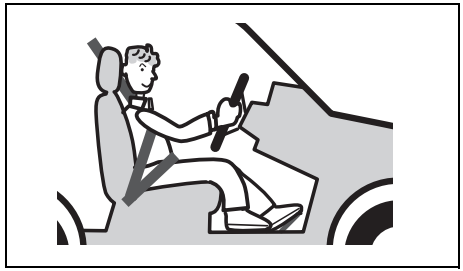

80J014

There is a possibility of major impact from the front airbags when the airbags activate and deploy instantaneously, the driver and the passenger should sit deeply into their seats and touch their backs lightly to the seatback. In addition, the seat should be positioned so that it is not too far forward.

⚠ WARNING

59RN02190

- **Do not position your face, chest, etc., close to the steering wheel or instrument cluster, and do not rest your feet up into this area. Otherwise, there is the risk of serious injury due to major impact if the airbag were to be deployed.**
- **If side airbags or side curtain airbags activate, you may get strong impact, resulting in severe injury. Do not put hands out of the window or lean on the door. Also, when sitting in the rear seat, do not hug the seatback of the front seat.**

For proper SRS airbag system operation

⚠ WARNING

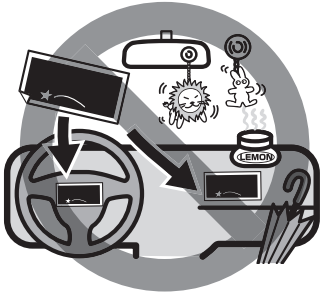

80T020410

- **Do not modify the steering wheel, such as replacing it, placing stickers on it, painting it or putting the cover on it.**
- **Do not place stickers on the airbag units or the surrounding areas or paint them. Also, do not attach any accessories, fragrances, electronic toll control units, portable car navigation systems, etc. to this area, and do not lean umbrellas or other objects against it.**

(Continued)

⚠ WARNING

(Continued)

- **Do not attach accessories (except for SUZUKI genuine products), etc., to the windshield or the inside rear-view mirror.**

59RN02200

- **For the vehicle with side airbags or side curtain airbags, do not attach accessories such as cup holders or hangers near the door. Also, do not lean umbrellas against the door.**

Warning label of SRS airbag for front passenger's seat

72M00150

You may find this label on the sun visor.

⚠ WARNING

NEVER use a rearward facing child restraint on a seat protected by an ACTIVE AIRBAG in front of it, DEATH or SERIOUS INJURY to the CHILD can occur.

Description of warning label

Symbol	Symbol meaning
	Do not install a rear-facing child restraint system to the front passenger's seat equipped with an airbag.
	If the front passenger's seat airbag were to be deployed, a major impact could be applied to a rear-facing child restraint system and the child.
	For more details, read this owner's manual.

"SRS AIRBAG" mark and location

The SRS AIRBAG is located near the "SRS AIRBAG" mark.

⚠ WARNING

- **If the airbag stored place is damaged or cracked, the airbag system may not work properly, which could result in serious injury in the event of a collision. Have your vehicle inspected by an authorized SUZUKI dealer or a qualified workshop.**
- **If you smash the airbag stored place or apply a strong impact to it, the airbag may not work properly or may inflate unexpectedly, resulting in serious injury.**
  Do not smash the airbag stored place or apply a strong impact to it.

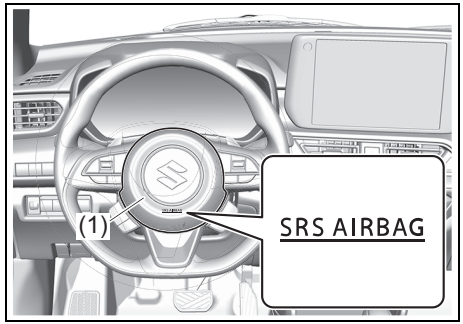

69T020240

(1) Driver's front airbag

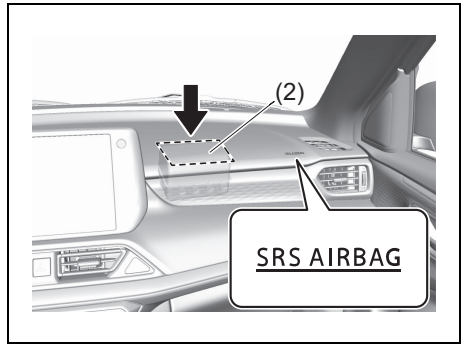

69T020250

(2) Front passenger's front airbag

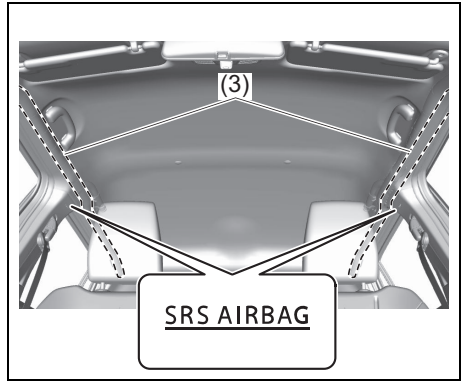

69T020260

(3) Side curtain airbags

The driver's front airbag (1) is located behind the center pad of the steering wheel and the front passenger's front airbag (2) is located behind the passenger's side of the dashboard.
The side curtain airbags (3) are located in the roof lining.
The words "SRS AIRBAG" are molded into the airbag covers to identify the location of the airbags.

69T020270

(4) Side airbags

The side airbags (4) are located in the part of the front seatbacks closest to the doors. The "SRS AIRBAG" labels are attached to the seatbacks to identify the location of the side airbags.

Installation of child restraint system

⚠ WARNING

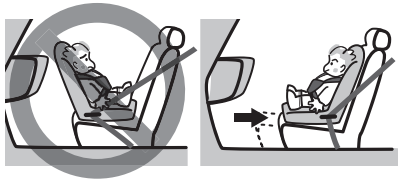

59RN02250

- **(Vehicle without the front passenger airbag deactivation system)**
  Do not install a rear-facing child restraint in the front passenger's seat. If the passenger's front airbag inflates, a child in a rear-facing child restraint could be killed or severely injured. The back of a rear-facing child restraint would be too close to the inflating airbag.

(Continued)

⚠ WARNING

(Continued)

- **(Vehicle with the front passenger air-bag deactivation system)**
  When using a child restraint system on the front passenger's seat, the front passenger's airbag system must be deactivated; otherwise deployment of the front passenger's airbag could result in the death or serious injury of the child.

Refer to "Child restraint systems" (P.2-29) for details on securing your child.

Handling for airbags

For proper SRS airbag system operation

If objects are positioned within the range where the airbag deploys, such objects might be impacted and blown off or the airbag may not deploy properly.

⚠ WARNING

- **As the airbag may not provide the best performance and it may result in severe injury in case of emergency, observe the following points.**
  - **Do not modify the suspension. If the vehicle height or the stiffness of the suspension were to change, airbag malfunction may result.**
  - **When installing a grille guard, etc., on the front of the vehicle, consult an authorized SUZUKI dealer or a qualified workshop. If you modify the front part of the vehicle, the airbag system may not work properly.**
  - **When installing radio equipment, etc., consult an authorized SUZUKI dealer or a qualified workshop. Radio waves, etc., from a radio may adversely affect the computer module used in the airbag system.**

(Continued)

⚠ WARNING

(Continued)

- **If the airbag-related parts are replaced or repaired, which has an impact on the airbag functions, the airbag may activate unnecessarily or may not activate when necessary.**
  The following situations may give a negative impact to the airbag system. In these cases, consult an authorized SUZUKI dealer or a qualified workshop beforehand.
  - **Removing the steering wheel, repairing the areas around the steering wheel, etc.**
  - **Center console repair, repairs around the instrument cluster, repairs under the front seat, and repairs of electrical wiring**
  - **Installation of audio equipment, etc.**
  - **Sheet metal painting and repairs around the dashboard**
  - **Replacement of the front seat and repairs around the seat**
  - **Repairs around the front pillar, the back pillar or the roof side**
  - **Repairs around the center pillar**

Driver's front airbag precautions

⚠ WARNING

- **Do not position your hands, face, chest, etc., close to airbag unit area or lean on the steering wheel. Otherwise, there is the risk of serious injury due to major impact if the airbag were to be deployed.**

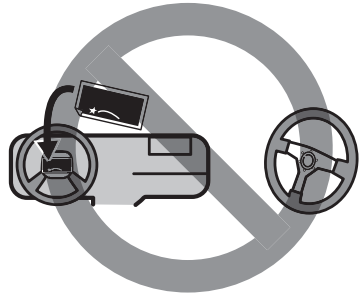

80T020360

- **Do not modify the steering wheel, such as replacing it, placing stickers on it, painting it or putting the cover on it. Otherwise, the airbag may not deploy normally in case of emergency, resulting in severe injury.**

Front passenger's front airbag precautions

⚠ WARNING

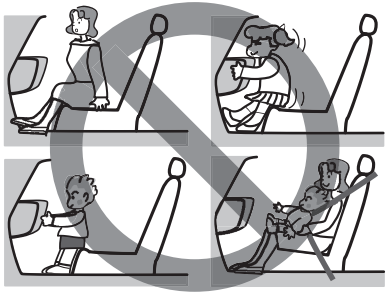

69RHS170

- **When riding in the front passenger's seat or when allowing a child to ride in this seat, be sure to observe the following points. Failure to do so may result in serious injury due to major impact if the airbag is deployed.**
  - **Do not position your hands or feet on the airbag unit area, and do not position your face, chest, etc., close to this area.**
  - **Do not allow a child to stand in front of the airbag unit area or sit on a passenger's lap in the front passenger's seat. Have a child ride in the rear seat wearing a seat belt.**

(Continued)

⚠ WARNING

(Continued)

  - **For a child that is not yet big enough to wear a seat belt properly, be sure to use a child restraint system on the rear seat.**

⚠ WARNING

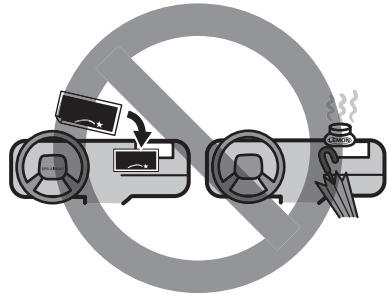

80T020370

- **As the airbag may not provide the best performance and it may result in severe injury in case of emergency, observe the following points.**
  - **Do not place stickers on the airbag units or the surrounding areas or paint them. Also, do not attach any accessories, fragrances, electronic toll control units, portable car navigation systems, etc. to this area, and do not lean umbrellas or other objects against it.**
  - **Do not attach accessories (except for SUZUKI genuine products), etc., to the windshield or the inside rearview mirror.**

Side airbags and side curtain airbags precautions

⚠ WARNING

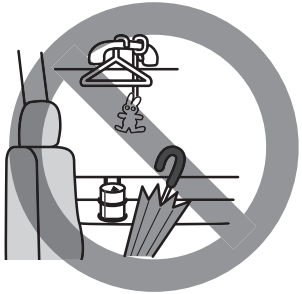

59RN02200

If you attach accessories such as cup holders or hangers near the door, or if you lean umbrellas against the door, when side airbags or side curtain airbags activate, these objects may be thrown out and may not inflate properly, resulting in severe injury.
Do not attach accessories such as cup holders or hangers near the door. Also, do not lean umbrellas against the door.

Function of airbags

How the System Works

In a frontal collision, the collision sensors will detect rapid deceleration, and if the controller judges that the deceleration represents a severe frontal collision, the controller will trigger the inflators. The inflators inflate the appropriate airbags with nitrogen or argon gas. The inflated airbags provide a cushion for your head and upper body. The airbag inflates and deflates so quickly that you may not even realize that it has activated. The airbag will neither hinder your view nor make it harder to exit the vehicle.
A seat belt helps keep you in the proper position for maximum protection when an airbag inflates. Adjust your seat as far back as possible while still maintaining control of the vehicle. Sit fully back in your seat; sit up straight; do not lean over the steering wheel or dashboard. Front occupants should not lean on or sleep against the door. Refer to “Seat adjustment” (P.2-5) and “Seat belt” (P.2-19) in this section for details on proper seat and seat belt adjustments.

⚠ WARNING

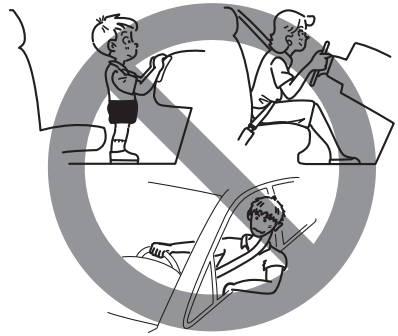

69T020300

- **The driver should not lean over the steering wheel. The front passenger should not rest his or her body against the dashboard where a front airbag is mounted or a child should not stand in front of the dashboard. Otherwise, he or she will get too close to the dashboard. For vehicle with side airbags and side curtain airbag, occupants should not lean on or sleep against the door. In these situations, the out-of-position occupant would be too close to an inflating airbag, and may suffer severe injury.**

(Continued)

⚠ WARNING

(Continued)

- **Do not attach any objects to, or place any objects over, the steering wheel or dashboard. Do not place any objects between the airbag and the driver or front passenger. These objects may interfere with airbag operation or may be propelled by the airbag in the event of a collision. Also, these objects may move when you start moving vehicle or while vehicle is moving, they may interfere with driver's view or safe driving. In each condition, it may cause severe injury.**
- **For vehicle with side airbags, do not use seat covers on the front seats, because seat covers may obstruct the inflation of side airbags. Also, near the door, do not place cup holders, hangers or any other objects and do not lean an umbrella, as these objects could be propelled by the airbag in the event of a collision. Either of these conditions may cause severe injury.**

(Continued)

⚠ WARNING

(Continued)

- **Do not strike or apply significant levels of impact to the airbag component areas. It can cause the airbags to malfunction.**
- **Even though your vehicle is moderately damaged by a collision, it may not be severe enough to trigger front, side or side curtain airbags to inflate. If your vehicle sustains any front-end or side damage, have the airbag system inspected by an authorized SUZUKI dealer or a qualified workshop to ensure that it works properly. If the original function of airbag system is damaged, airbag may not function effectively and fully in case of an emergency.**

⚠ CAUTION

Airbags must inflate quickly and forcefully in order to reduce the chance of serious or fatal injuries. However, an unavoidable consequence of the quick inflation is that the airbag may irritate bare skin, such as the facial area against a front airbag. Wash off any residue as soon as possible to prevent skin irritation. Also, upon inflation, a loud noise will occur and some powder and smoke will be released. These conditions are not harmful and do not indicate a fire in the vehicle. Be aware, however, that some airbag components may be hot for a while after inflation.
This may cause burn injury.

Your vehicle is equipped with a diagnostic module which records information about the airbag system if the airbags deploy in a collision. The module records information about overall system status, and which sensors activated the deployment.

Servicing the airbag system

If the airbags inflate, have the airbags and related components replaced by an authorized SUZUKI dealer or a qualified workshop as soon as possible.

If your vehicle ever gets in deep water and the driver's floor is submerged, the airbag controller could be damaged. If this happens, ask an authorized SUZUKI dealer or a qualified workshop to check the airbag system as soon as possible.

Special procedures are required for servicing or replacing an airbag. For that reason, only an authorized SUZUKI dealer or a qualified workshop should be allowed to service or replace your airbags. Remind anyone who services your SUZUKI vehicle that it has airbags.

Service on or around airbag components or wiring must be performed only by an authorized SUZUKI dealer or a qualified workshop. Improper service could result in unintended airbag deployment or could render the airbag inoperative. Either of these two conditions may result in severe injury.

To prevent damage or unintended inflation of the airbag system, check that the battery is disconnected and the ignition mode has been in LOCK (OFF) for at least 90 seconds before performing any electrical service work on your SUZUKI vehicle. Do not touch airbag system components or wires. The wires are wrapped with yellow tape or yellow tubing, and the couplers are yellow for easy identification.

⚠ CAUTION

If you do not handle the airbags properly, they may inflate unexpectedly, resulting in personal injury.
When scrapping the airbags or the vehicle that has the airbags, consult an authorized SUZUKI dealer or a qualified workshop.

Front airbag deployment conditions

Front airbags deploy (inflation)

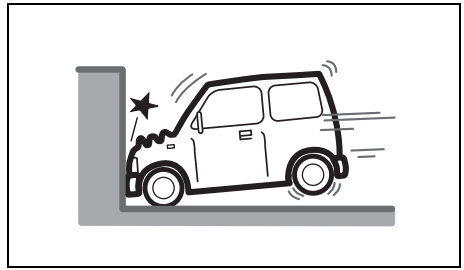

80J097

- Frontal collision with a fixed wall that does not move or deform at more than about 25 km/h (15 mph)

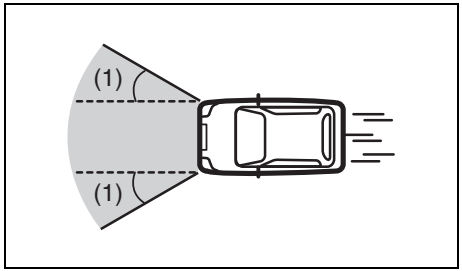

80J098E

- Strong impact equivalent to frontal collision such as above at left and right angles of about 30 degrees (1) or less from the front of your vehicle

Front airbags may inflate

Receiving a strong impact to the lower body of your vehicle, the front airbags may inflate.

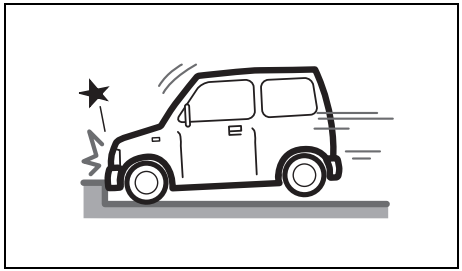

80J099

- Hitting a curb or medial strip

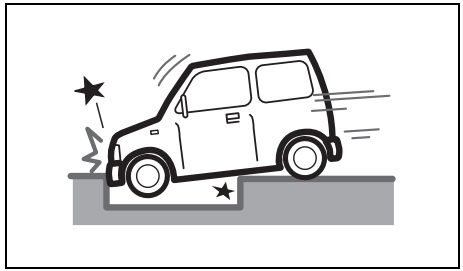

80J100E

- Falling into a deep hole or ditch

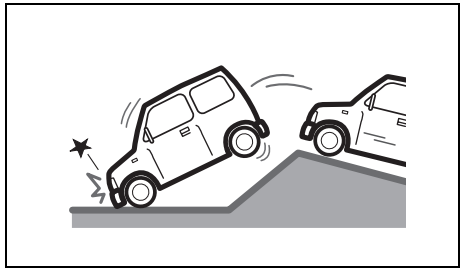

80J101

- Landing hard or falling

Front airbags may not inflate

The front airbags may not inflate when a strong impact has not occurred since the collision object was easy to be deformed or moved, or the crashed portion of your vehicle was easy to be deformed.

Also, front airbags may not inflate in many cases when the collision angle is greater than about 30 degrees at left and right angles from the front of your vehicle.

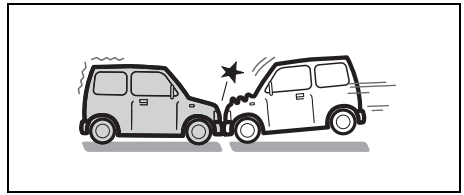

80J102

- Frontal collision to a stopped vehicle at less than about 50 km/h (30 mph)

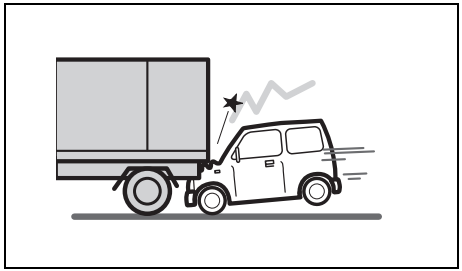

80J103

- Collision that the front of your vehicle goes under the bed of a truck etc.

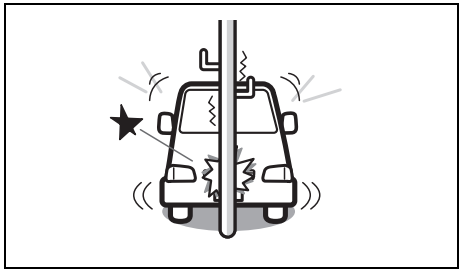

80J104

- Collision with a utility pole or stumpage

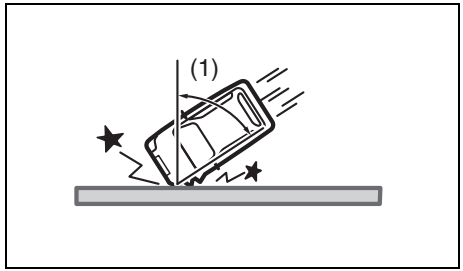

80J105E

- Collision with a fixed wall or guardrail at left and right angles of greater than about 30 degrees (1) from the front of your vehicle

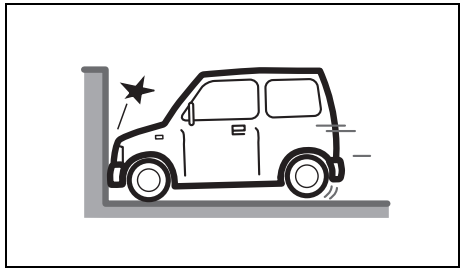

80J106

- Frontal collision with a fixed wall that does not move or deform at less than about 25 km/h (15 mph)

Front airbags do not inflate

Front airbags do not inflate in rear impacts, side impacts or rollovers, etc. However, these might inflate in a strong impact.

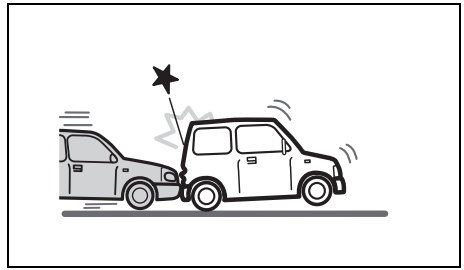

80J120

- Impact from the rear

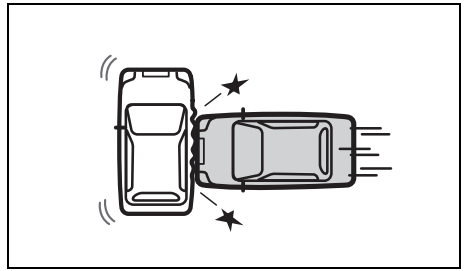

80J119

- Impact from the side

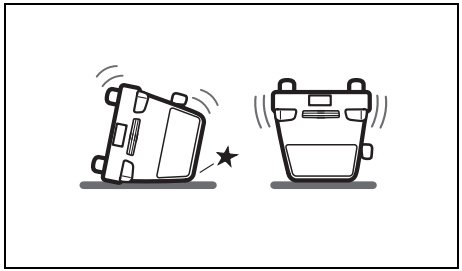

80J110

- Vehicle rollover

Side airbags and side curtain air-bags deployment conditions

Side airbags and side curtain airbags deploy (inflation)

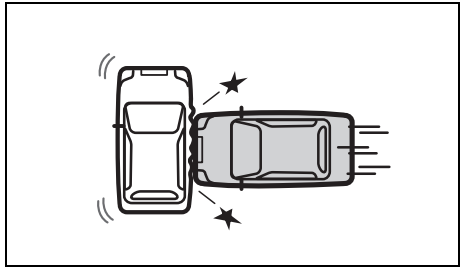

80J119

- Impacts from the side at about a right angle by a general passenger car to your vehicle at more than about 30 km/h (19 mph) or in a greater impact

Side airbags and side curtain airbags may inflate in a strong impact

Side airbags and side curtain airbags may inflate even in a frontal collision, if there is a strong impact to the lateral direction.

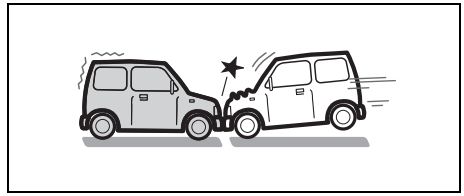

80J102

- Frontal collision

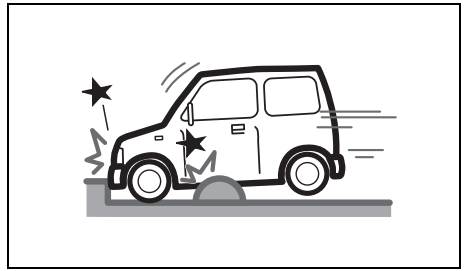

52RM20730

- Hitting a curb or bump

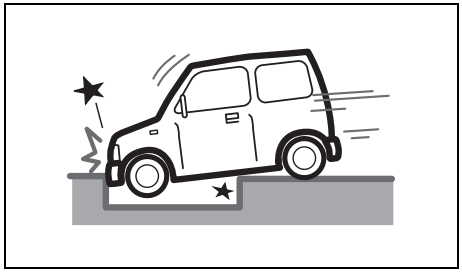

80J100E

- Falling into a deep hole or ditch

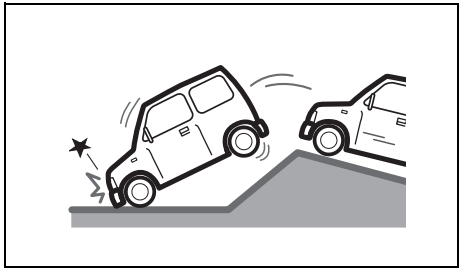

80J101

- Landing hard or falling

Side airbags and side curtain airbags may not inflate

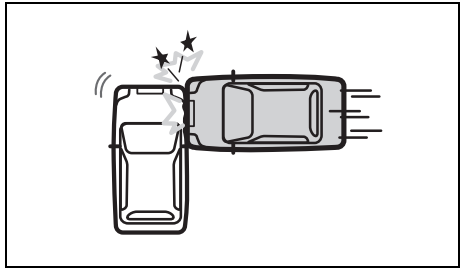

80J121

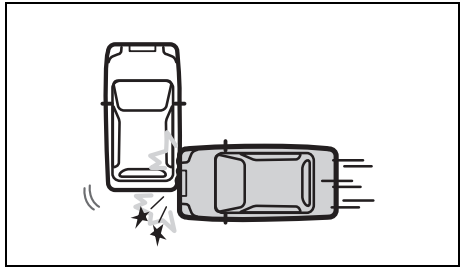

80J122

- Impact from the side to the vehicle body other than the passenger compartment

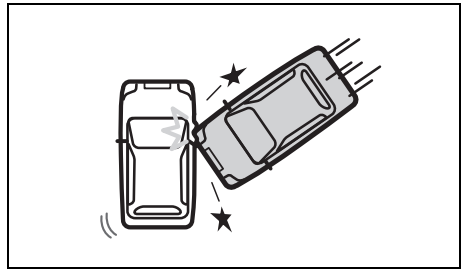

80J123

- Impact from the side at an oblique angle

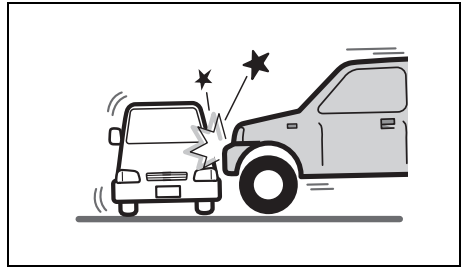

80J124

- Impact from the side by a high hood vehicle

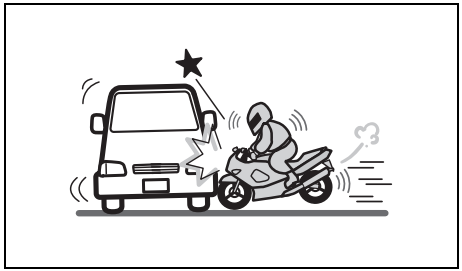

80J125

- Impact from the side by a motorcycle or bicycle

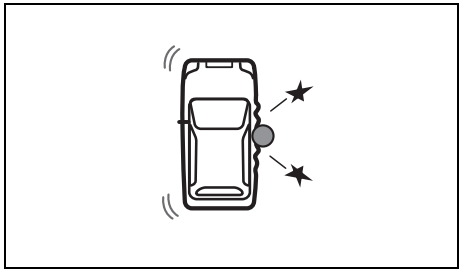

80J126

- Collision with a utility pole or stumpage

Side airbags and side curtain airbags do not inflate

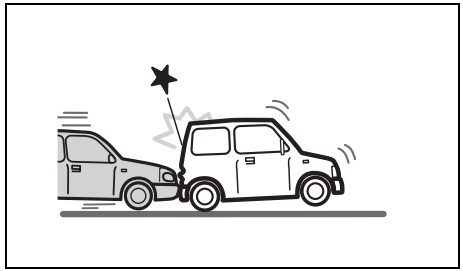

80J120

- Impact from the rear

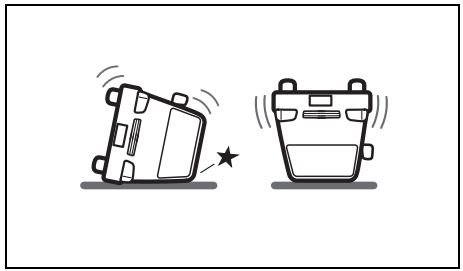

80J110

- Vehicle rollover

When starting the engine

Be careful of carbon monoxide poisoning

⚠ WARNING

Exhaust gases contain carbon monoxide, a potentially lethal gas that is colorless and odorless. If you breath exhaust gases, you may feel drowsy, resulting in severe health problems or death in the worst case.
If you start the engine, be careful of carbon monoxide poisoning.

Do not run engine in a poorly-ventilated area

⚠ WARNING

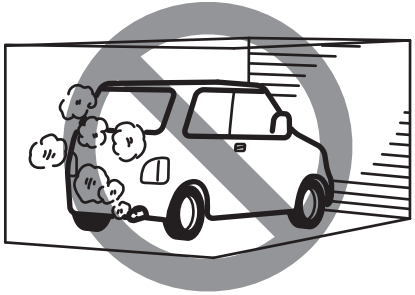

69T020310

Avoid breathing exhaust gases. Exhaust gases contain carbon monoxide, a potentially lethal gas that is colorless and odorless. Since carbon monoxide is difficult to detect by itself, take the following precautions to help prevent carbon monoxide from entering your vehicle.
Otherwise, it may result in severe health problems or death in the worst case.

- **Do not leave the engine running in garages or other confined areas.**

(Continued)

⚠ WARNING

(Continued)

- **Do not park with the engine running for a long period of time, even in an open area. If it is necessary to sit for a short time in a parked vehicle with the engine running, check that the air intake selector is set to "FRESH AIR" and the blower is at high speed.**
- **Avoid operating the vehicle with the tailgate or trunk open. If it is necessary to do so, check that the all windows are closed, and the blower is at high speed with the air intake selector set to "FRESH AIR".**
- **To allow proper operation of your vehicle's ventilation system, keep the air inlet grill in front of the windshield clear of snow, leaves or other obstructions at all times.**
- **Keep the exhaust tailpipe area clear of snow and other material to help reduce the buildup of exhaust gases under the vehicle. This is particularly important when parked in blizzard conditions.**
- **Have the exhaust system inspected periodically for damage and leakage. Any damage or leakage should be repaired immediately.**

Do not take a nap with engine running

⚠ WARNING

69RHS172

Do not take a nap with the engine running. Otherwise, it may result in an accident, severe health problems or death in the worst case.

- **Exhaust gases can enter the vehicle due to surrounding conditions and wind direction, possibly causing carbon monoxide poisoning.**

(Continued)

⚠ WARNING

(Continued)

- **The gearshift lever could change unintentionally, or the accelerator pedal could be depressed accidentally, causing an accident.**
- **If you were to accidentally step on the accelerator pedal while asleep, the engine and exhaust system could overheat, resulting in danger of fire.**

When loading the luggage

Loading too much luggage in the vehicle may have negative effects to the vehicle body or driving performance.

⚠ WARNING

59RN02230

- **Fuel, chemical containers, spray cans etc. may catch a fire or cause an explosion.**
  Do not bring these objects into the vehicle.

(Continued)

⚠ WARNING

(Continued)

80T020390

- **If you place any objects on the instrument panel, these objects may move and interfere with driver's view or safe driving. Also, the front passenger's front airbag may not work properly or these objects may be thrown out when the airbag inflates in an accident.**
  Do not place any objects on the instrument panel.

⚠ CAUTION

- **If you hang any objects on the gearshift lever or use it as a handrest, the gearshift lever may not work properly, resulting in a malfunction or an accident.**
  Do not hang any objects on the gearshift lever or use it as a handrest.

69T020280

- **If you pile up luggage, it may interfere with driver's view. Also, in a sudden braking, the luggage would jump out and it may result in an accident.**
  Do not pile up luggage in the vehicle.

(Continued)

⚠ CAUTION

(Continued)

- **If animals move about in the vehicle, it may interfere with driver's view. Also, in a sudden braking, it may result in an accident.**
  When you bring animals into the vehicle, make sure that animals do not move about.

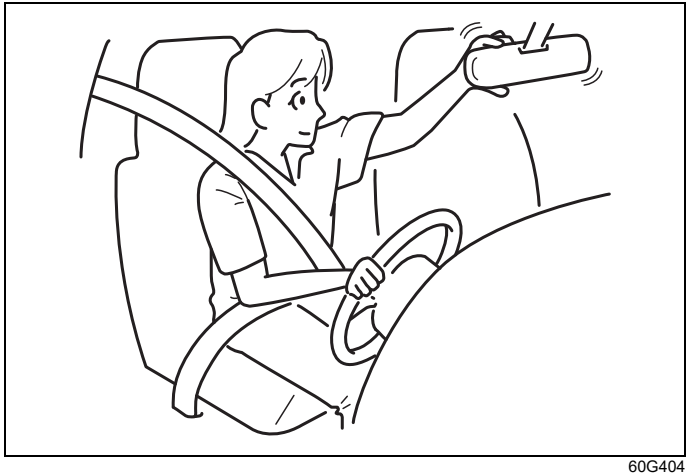

60G404

BEFORE DRIVING

Keys 3-1
Doors 3-2
Keyless entry system 3-8
Keyless push start system remote controller 3-10
Theft deterrent alarm system (if equipped) 3-15
Theft deterrent light (if equipped) 3-17
Windows 3-17
Lighting control lever 3-21
Headlight leveling switch 3-26
Turn signal control lever 3-26
Hazard warning switch 3-27
Windshield wiper and washer lever 3-28
Horn 3-31
Heated rear window switch/
heated outside rearview mirror switch 3-32

Keys

Be careful not to lose your key and to leave it in the locked vehicle.

⚠ WARNING

When you take the remote controller in an airplane, do not press the lock button or the unlock button. When you put the remote controller in a bag, place it so that either of these buttons is not pressed easily. If either of these buttons is pressed, radio wave may interfere with operation of the airplane.
***The remote controller is an electronic device which has a restriction on its use in the airplane.**

The key which is stowed in the remote controller can be used for locking or unlocking the doors. However, it cannot be used for starting or stopping the engine. To start or stop the engine, use the remote controller. Refer to “Starting engine” (P.5-13) and “Stopping engine” (P.5-15).

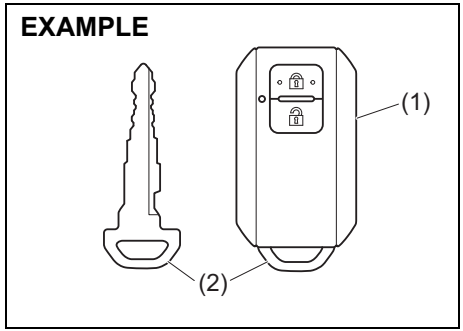

59RN03010

Your vehicle comes with two identical keyless push start system remote controllers (1), each with a detachable key (2) housed inside.

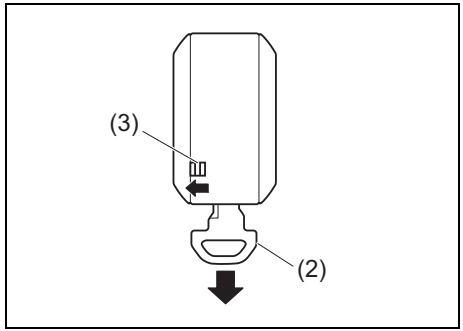

59RN03020

To remove the key from the remote controller, slide the lock (3) in the direction of the arrow and pull out the key.

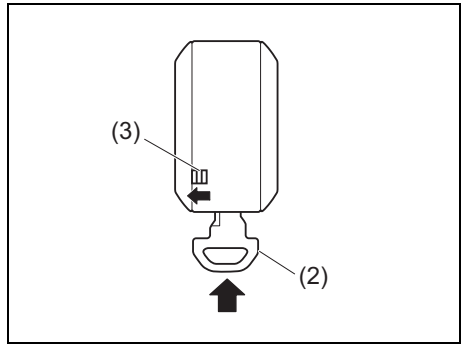

59RN03030

To stow the key into the remote controller, push the key in the remote controller until you hear a click.

NOTE:
- *Always stow the key into the remote controller. When the battery of the remote controller runs out or the remote controller has malfunction, you may not lock or unlock the doors.*
- *If you lose the remote controller, ask an authorized SUZUKI dealer or a qualified workshop as soon as possible to prevent theft.*
- *If you want to purchase the remote controller, ask an authorized SUZUKI dealer or a qualified workshop.*

Key number plate

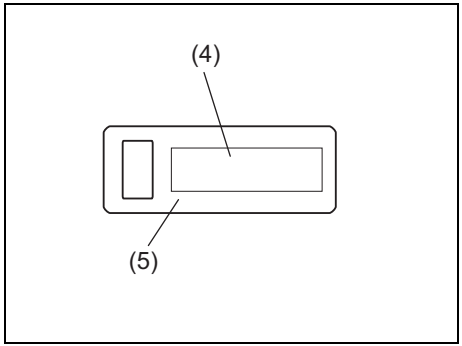

59RN030080

The key identification number (4) is stamped on a metal tag (5) provided with the keys. Keep the tag in a safe place. If you lose your keys, you will need this number to have new keys made. Write the number below for your future reference.

KEY NUMBER:

NOTE:

- *Carefully keep the tag in the place other than your vehicle, so that someone does not find out about the key identification number. If you lose your key, inform the key identification number of an authorized SUZUKI dealer or a qualified workshop.*
- *When you resell or transfer your vehicle to a new owner or operator, give the key number plate with your vehicle to him or her.*

Immobilizer System

For detail of immobilizer system, “Immobilizer system” in the “OPERATING YOUR VEHICLE” section

Doors

⚠ WARNING

- **When a seat belt or luggage is caught by a door, the door cannot be shut properly and it may open while driving. This may cause an accident. Close a door not to catch a seat belt or luggage in the door.**
- **When you keep the tailgate open with the engine running, exhaust gases will enter the vehicle and cause carbon monoxide poisoning. This may cause severe health problems or death in the worst case. Do not keep the tailgate open with the engine running.**
- **To prevent fire or theft, stop the engine and lock the doors when leaving the vehicle.**
- **When opening a door, be careful of the surrounding area. An accident, such as a collision with the vehicle or a pedestrian behind your vehicle, may occur. Be very careful when opening a door especially on a windy day.**

⚠ CAUTION

- **When a child opens or closes a door, his / her hands, legs or head may be caught in the door and this may cause injury. Opening or closing a door should be performed not by a child but by an adult.**
- **When the tailgate is not fully opened, it may be unexpectedly closed and this may cause injury. When opening the tailgate, open it fully.**
- **Opening the tailgate right behind the exhaust pipes may cause burn injury. With the engine running, do not open the tailgate right behind the exhaust pipes.**

NOTE:
- *When leaving the vehicle even for a short period of time, do not leave cash or valuables in the vehicle, to avoid risk of theft.*
- *Depending on the setting conditions of the security alarm and the opening conditions of the doors, an alarm may operate. Refer to "Theft deterrent alarm system (if equipped)" (P.3-15).*

Side door locks

Left hand vehicle

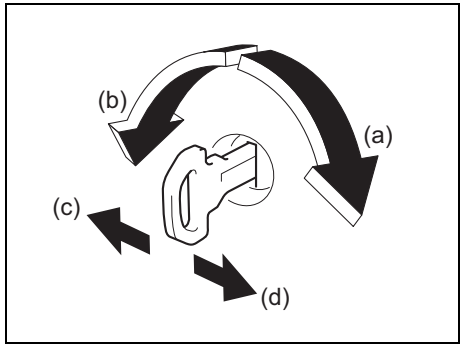

69T030290

Right hand vehicle

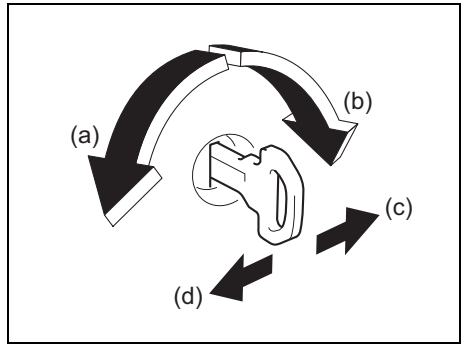

69T030300

(a) LOCK
(b) UNLOCK
(c) Front
(d) Rear

To lock a front door from outside the vehicle:
- Insert the key and turn the top of the key toward the front of the vehicle, or
- Turn the lock knob forward, then pull and hold the door handle as you close the door.

To unlock a front door from outside the vehicle, insert the key and turn the top of the key toward the rear of the vehicle.

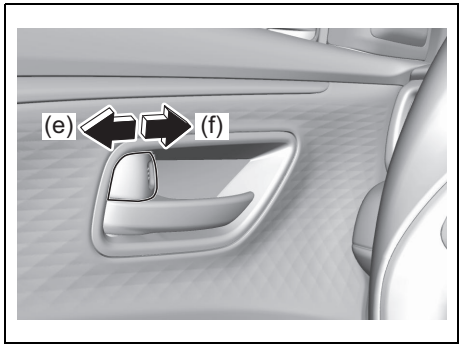

69T030010

(e) UNLOCK
(f) LOCK

To lock a door from inside the vehicle, turn the lock knob forward. Turn the lock knob rearward to unlock the door.

To lock a rear door from outside the vehicle, turn the lock knob forward and close the door. You do not need to pull and hold the door handle as you close the door.

NOTE:
Be sure to hold the door handle when you close a locked front door, or the door will not remain locked.

Central door locking system

Left hand vehicle

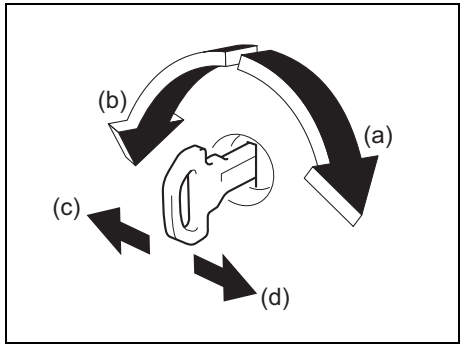

69T030290

Right hand vehicle

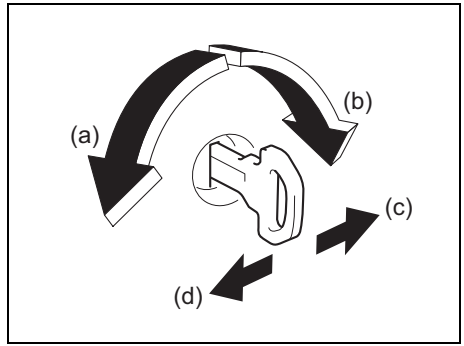

69T030300

(a) LOCK
(b) UNLOCK
(c) Front
(d) Rear

You can lock and unlock all doors (including the tailgate) simultaneously by using the key in the driver's door lock.

To lock all doors simultaneously, insert the key in the driver's door lock and turn the top of the key toward the front of the vehicle once.

To unlock all doors simultaneously, insert the key in the driver's door lock and turn the top of the key toward the rear of the vehicle twice.

NOTE:
You can switch the function that unlocks all doors from requiring two turns to requiring one turn, and vice versa, via the information display setting mode. For details on how to use the information display, refer to "Setting mode of information display" (P.12-8).

To unlock the driver's door only, insert the key in that door lock and turn the top of the key toward the rear of the vehicle once.

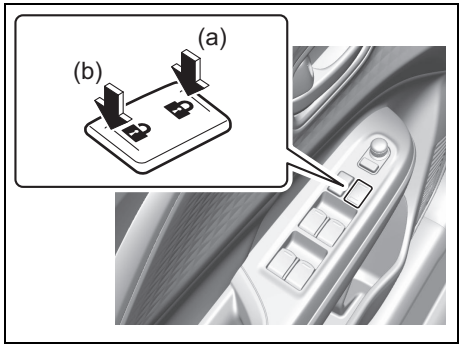

69T030020

(a) LOCK
(b) UNLOCK

You can also lock or unlock all doors by pressing the front or rear of the switch, respectively.

NOTE:
- *You can also lock or unlock all doors by operating the transmitter or remote controller. Refer to "Keyless push start system remote controller" (P.3-10).*
- *If your vehicle is equipped with the keyless push start system, you can also lock or unlock all doors by pushing the request switch. Refer to "Keyless push start system remote controller" (P.3-10).*

Child-proof locks (rear door)

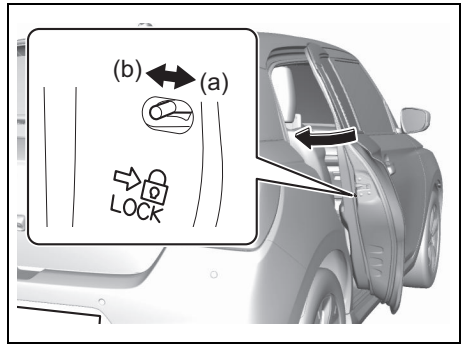

69T030030

(a) LOCK
(b) UNLOCK

Each of the rear doors is equipped with a child-proof lock which can be used to help prevent unwanted opening of the door from inside the vehicle. When the lock lever is in the lock position (a), the rear door can only be opened from outside. When the lock lever is in the unlock position (b), the rear door can be opened from inside or outside.

⚠ WARNING

Be sure to place the child-proof lock in the lock position whenever children are seated in the rear.

NOTE:
When you open a door from inside, put your hand out of the window and use the door handle.

Tailgate

⚠ WARNING

Always check that the tailgate is closed and latched securely. Completely closing the tailgate helps prevent occupants from being thrown from the vehicle in the event of an accident. Completely closing it also helps keep exhaust gases from entering the vehicle.

Locking and unlocking from outside the vehicle

Left hand vehicle

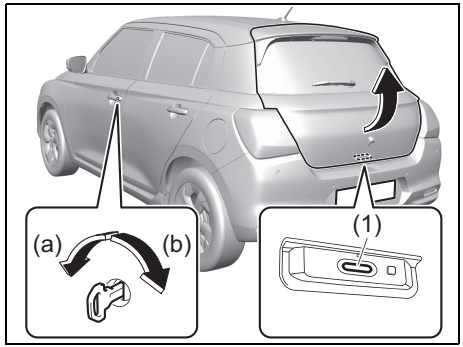

69T030040

Right hand vehicle

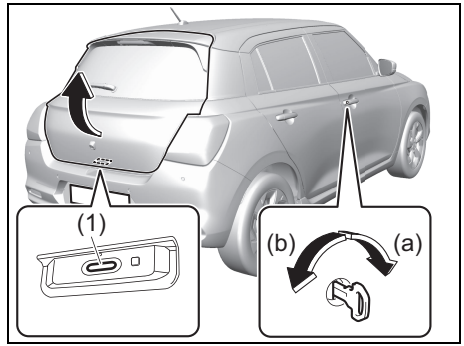

69T030340

(a) LOCK
(b) UNLOCK

You can lock and unlock the tailgate by using the key in the driver's door lock.

To open the tailgate, push and hold the tailgate unlatch switch (1) and lift the tailgate.

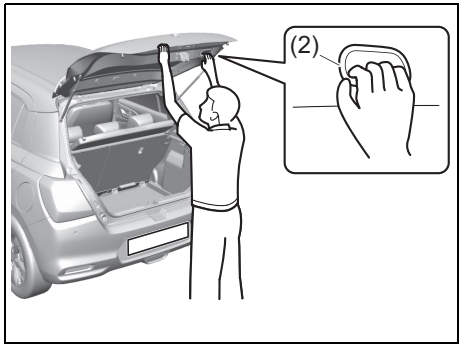

69T030050

To close the tailgate, pull it down by laying your hands on the part (2) of the lower right side and push the tailgate strongly a little.

NOTE:
When the tailgate is closed incompletely, follow the procedure below:
1) *Push the tailgate unlatch switch (1) and open the tailgate.*
2) *After a few seconds, close the tailgate.*
3) *Check that the tailgate is closed completely.*

⚠ CAUTION

69T030060

To avoid damage and malfunction of the dumper stay, observe the following precautions. Otherwise, the damper stay (3) which upholds the tailgate may not operate smoothly and the tailgate may not be kept up when opening it.
- **Do not scratch the rod part of the damper stay and do not attach foreign materials such as dirt, vinyl and tape to this part.**
- **Do not lay your hands on the damper stay and do not hang any objects.**

Unlocking from inside the vehicle
If you cannot unlock the tailgate by using the key in the driver's door lock due to a discharged lead-acid battery or malfunction, follow the procedure below to unlatch the tailgate from inside the vehicle.
1) Fold the rear seat forward for easier access. Refer to "Folding rear seats" (P.2-13) for details on how to fold the rear seat forward.

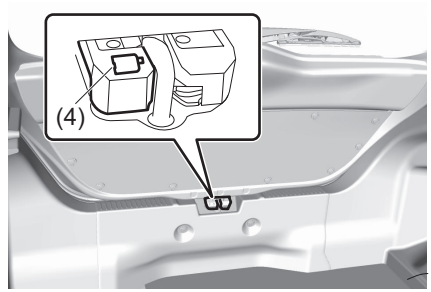

69T030070

2) Open the cover (4) in the lock mechanism of the tailgate.

NOTE:
Be careful not to lose the cover (4) because it is small and detachable.

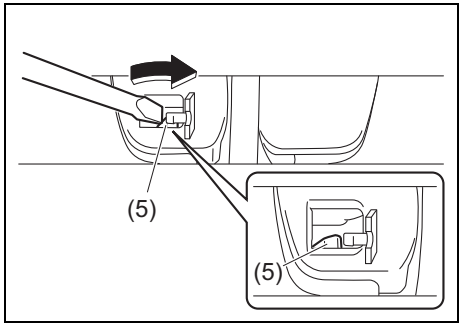

69T030080

3) Move the lever (5) in arrow direction by using a flat-bladed screwdriver to unlock the tailgate.
4) Push open the tailgate from inside. The tailgate will be latched again by simply closing the tailgate.

If the tailgate cannot be unlatched by pushing the unlatch switch (1), have the vehicle inspected by an authorized SUZUKI dealer or a qualified workshop.

⚠ CAUTION

Check that there is no one near the tailgate when pushing open the tailgate from inside the vehicle.

Keyless entry system

By pressing the operational part of the keyless push start system remote controller within the range of about 2 m (6.6 ft) from the vehicle, you can lock/unlock all doors.
Whenever locking the vehicle, make sure to pull on the door handle to confirm that it is locked.

⚠ WARNING

To prevent accidents such as fire and theft, stop the engine and lock the doors whenever leaving the vehicle.

NOTICE

Precision electronic parts are incorporated into the keyless push start system remote controller. Observe the following in order to prevent the breakdown of its electronic parts.

- **Do not place the keyless push start system remote controller in areas where it will get hot, such as on top of the instrument cluster.**
- **Do not drop the keyless push start system remote controller or allow it to sustain strong impact.**
- **Do not wash the keyless push start system remote controller or allow it to make contact with water.**

NOTE:

- *The working distance of the keyless entry system may change due to the influence of the surroundings. Also, keyless entry system may not work in places where strong radio waves, etc., are generated.*
- *When leaving the vehicle even for a short period of time, do not leave cash or valuables in the vehicle, to avoid risk of theft.*
- *If you cannot lock/unlock the door with the keyless push start system remote controller, use the actual key to lock/unlock the door.*
- *When the keyless entry system does not operate at the correct distance, the battery in the keyless push start system remote controller may be dead.*
- *If you operate the keyless push start system remote controller more than necessary, battery life will be drained quicker than normal.*
- *For purchasing keyless push start system remote controller and registering personal identification codes, consult an authorized SUZUKI dealer or a qualified workshop.*

Keyless push start system

The remote controller enables the following operations:

- You can lock or unlock the doors by operating the lock button or unlock button on the remote controller. For details, refer to the explanation in this section.
- You can lock or unlock the doors by pushing the request switch on the door handle. For details, refer to the explanation in this section.

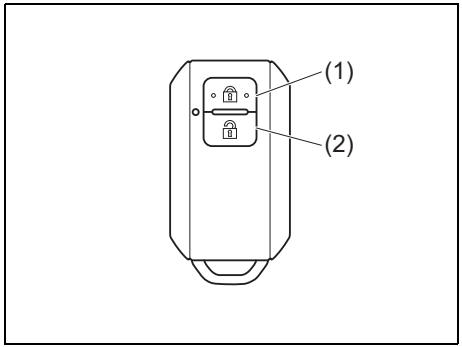

59RN03050

(1) LOCK button
(2) UNLOCK button

You can lock or unlock all doors (including the tailgate) simultaneously by operating the remote controller near the vehicle.

NOTE:

- *The keyless entry system may not work in the following conditions:*
- *If any of doors is opened, you cannot lock the vehicle. (You can unlock the vehicle.) The exterior buzzer will sound for about 2 seconds.*
  - *When the engine switch is in ACC or ON mode.*
- *You can register up to four remote controllers and the keys for your vehicle.*

Central door locking system

- To lock all doors, push LOCK button (1) once.
- To unlock only the driver's door, push UNLOCK button (2) once.
- To unlock other doors, push UNLOCK button (2) once again.

NOTE:
You can switch the function that unlocks all doors from requiring two pushes to requiring one push, and vice versa, via the information display setting mode. For details on how to use the information display, refer to "Setting mode of information display" (P.12-8).

The turn signal lights will flash once and the exterior buzzer will sound once when the doors are locked.

Answer-back function

The answer-back function informs door locking/unlocking via keyless entry system.

Default setting (factory setting)

Answer-back function	When locked	When unlocked
Hazard warning light	Blinks once	Blinks twice
Interior light (when switch is in "DOOR" position)	–	Lights up for about 15 seconds

When changing the settings

Answer-back function	When locked	When unlocked
Hazard warning light	–	–
Interior light (when switch is in "DOOR" position)	Blinks twice	Lights up for about 15 seconds

- If you want the interior light to light up or blink at the same time as keyless entry system operation, set the interior light switch to the "DOOR" position.

- After the interior light turns on for about 15 seconds, it gradually dims and turns off automatically.
- For model equipped with the keyless push start system, the exterior buzzer will sound.

Default setting (factory setting)

Answer-back function	When locked	When unlocked
Exterior buzzer	Sounds once	Sounds twice

When changing the settings

Answer-back function	When locked	When unlocked
Exterior buzzer	–	–

NOTE:
- *For changing the settings (customizing) of the answer-back function, consult an authorized SUZUKI dealer or a qualified workshop.*
- *The answer-back function will operate when the vehicle is locked/unlocked by a request switch as well. Also, the following signs can be customized separately:*
  - *Sign by the hazard warning light and interior light*
  - *Sign by the exterior buzzer*

Timer lock function

This function automatically locks the doors after a certain interval, in order to prevent theft.
- After unlocking the vehicle via keyless entry system, the vehicle will automatically lock its doors after about 30 seconds if no doors are opened during that time.
- When all the doors are closed and the hood is open, and the timer lock function is activated, the security alarm is not set.

NOTE:
- *The timer lock function will operate when the vehicle is unlocked by a request switch.*

Keyless push start system remote controller

⚠ WARNING

Radio waves from the keyless push start system antenna(s) may interfere with operation of electrical medical equipment such as pacemakers. Failure to take the precautions listed below can increase the risk of severe injury or death due to radio wave interference.
- **Anyone who uses electrical medical equipment such as a pacemaker should consult the medical equipment supplier or their medical advisor about whether radio waves from the antenna(s) can interfere with the medical equipment.**
- **If radio wave interference is a concern, have the function of the antenna(s) disabled by an authorized SUZUKI dealer or a qualified workshop.**

⚠ CAUTION

Radio waves from the keyless push start system remote controller may interfere with operation of mobile phones and other remote controllers. Do not operate your keyless push system remote controller, the request switch and the engine switch more than necessary.

NOTE:
- *The driver should keep the remote controller and do not leave it in the vehicle.*
- *If you lose the remote controller, consult an authorized SUZUKI dealer or a qualified workshop as soon as possible, to avoid theft.*
- *The keyless push start system may not function correctly in certain environments or under certain operating conditions as follows:*
  - *When there are strong signals coming from a television, power station or a cellular phone.*
  - *When the remote controller is placed near an electronic device such as personal computer.*
  - *When the remote controller is in contact with or covered by a metal object.*
  - *When a radio wave type remote keyless entry is used nearby.*
  - *When your vehicle is parked in a coin-operated parking (due to influence of radio waves for detecting vehicle).*

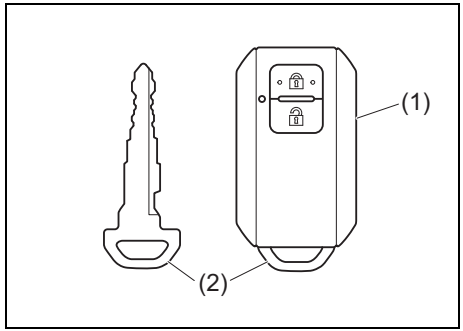

59RN03010

Your vehicle comes with two identical keyless push start system remote controllers (1), each with a detachable key (2) housed inside.

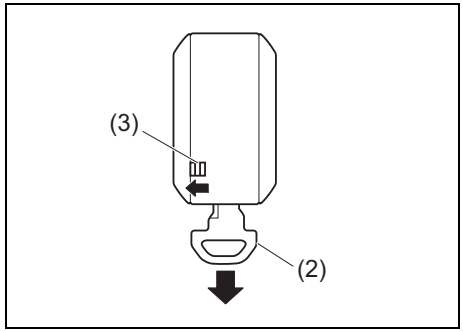

59RN03020

To remove the key from the remote controller, slide the lock (3) in the direction of the arrow and pull out the key.

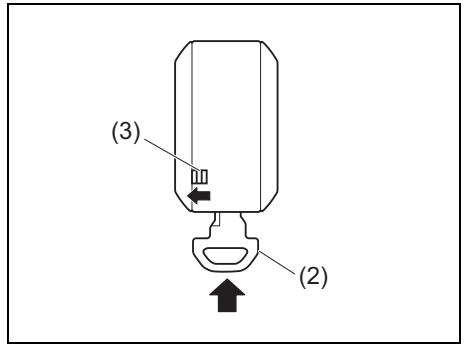

59RN03030

To stow the key into the remote controller, push the key in the remote controller until you hear a click.

⚠ CAUTION

Disassembly, repair and modification of the remote controller may cause fire, electrical shock and injury. Also, you may be punished by the law.
Do not disassemble the remote controller (except replacement of the battery), repair it and modify it.

NOTICE

The remote controller is a sensitive electronic instrument. To avoid damaging the remote controller:
- **Do not place the remote controller on the dashboard where it gets high temperature.**
- **Do not drop the remote controller and apply strong impact to it.**
- **Do not wash the remote controller and put it into water.**
- **Do not attach a magnetic key chain to the remote controller.**
- **Keep the remote controller away from magnetic objects such as a television and audio equipment.**
- **Keep the remote controller away from electrical medical equipment. Also, do not receive medical treatment when you keep the remote controller with you.**

NOTE:
- *The suitability marking of product is attached inside of the remote controller. Do not erase and modify this marking. Otherwise, you may be punished by the law.*
- *Stow a key in the remote controller. When the battery of the remote controller runs out or the remote controller has malfunction, you may not lock or unlock the doors.*
- *You can register up to four remote controllers and the keys for your vehicle.*
- *The battery life of the remote controller is about two years, but it can vary depending on usage conditions.*
- *The remote controller always perform a receiving operation to communicate with a vehicle. If the remote controller keeps receiving strong radio wave such as you place the remote controller near a television or a personal computer, the battery may seriously run out.*
- *To purchase a new remote controller and register a new remote controller code, ask an authorized SUZUKI dealer or a qualified workshop.*

Warning message when the remote controller battery runs out

When the battery of the remote controller almost runs out and you press the engine switch to ON mode, the message will be shown on the information display of the instrument cluster. Replace the battery with new one and reset the warning. For details, refer to “Warning and indicator messages” (P.4-16) and “Keyless push start system remote controller battery replacement” (P.9-56).

NOTE:
By changing the settings (customizing), you can choose non-display of the message. For details, consult an authoriozed SUZUKI dealer or a qualified workshop.

Locking or unlocking doors by request switch

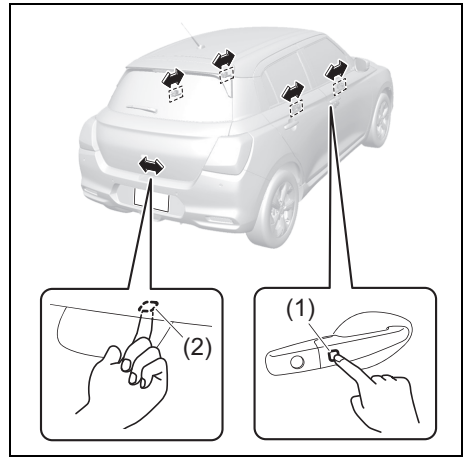

69T030090

When the remote controller is within the operating range described in this section, you can lock or unlock the doors (including the tailgate) by pushing the request switch (1) on the door handle of the driver’s door or the front passenger’s door or the request switch (2) on the tailgate.
Be sure that the doors are locked by pulling the door handle, after you operate the request switch to lock the doors.

⚠ WARNING

When leaving the vehicle, stop the engine and lock the doors to avoid the risk of fire and theft.

NOTE:
- *The door locks cannot be operated by the request switch under the following conditions:*
  - *If any door is open or is not completely closed.*
  - *If the ignition mode is other than LOCK (OFF).*
- *If you lock or unlock the doors by pushing the request switch, the answer-back function and the timer lock function will operate. For details, refer to the explanation in this section.*
- *When leaving the vehicle even for a short period of time, do not leave cash or valuables in the vehicle, to avoid risk of theft.*

Operating range of request switch

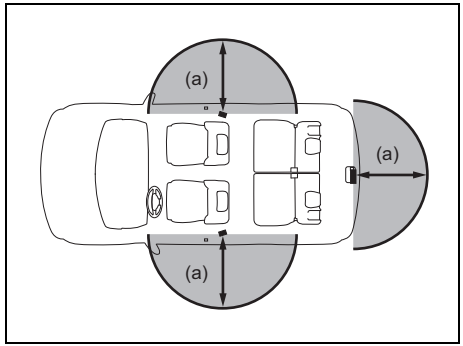

69T030320

(a) 80 cm (2.6 ft)

When the remote controller is within approximately 80 cm (2.6 ft) from a front door handle or the tailgate switch, you can lock or unlock the doors by pushing the request switch.

NOTE:
- *Even if the remote controller is within the operating range of the request switch, the remote controller may not be detected and the request switch may not operate in the following conditions:*
  - *When the battery of the remote controller runs down*
  - *When the remote controller is interfered with strong radio waves or noise*
  - *When the remote controller is in contact with or covered by a metal object*
  - *When the remote controller is too close to the door glass*
  - *When the remote controller is far from the request switch such as near the ground, on a high position or in your hip pocket*
- *The request switch operates only towards the door within the operating range. For example, if the remote controller is within the operating range of the driver's door, the request switch on the driver's door operates. However, the request switches on the passenger's door and the tailgate does not operate.*
- *If a spare remote controller is in the vehicle, the request switch may not operate normally.*

Warning buzzer of inoperative request switch

This exterior buzzer beeps for about 2 seconds in the following conditions to warn you that the request switch is inoperative:

- The request switch is pressed after all doors are closed with the ignition mode changed to ACC or ON by pressing the engine switch.
- The request switch is pressed in any of the following conditions after changing the ignition mode to LOCK (OFF) by pressing the engine switch.
  - The remote controller is left inside the vehicle.
  - Any of the doors is open.

Press the request switch again after doing the following:
With the ignition mode changed to LOCK (OFF) by pressing the engine switch, bring out the remote controller if it is inside the vehicle and check that all doors are completely closed.

Function to prevent a key left in the vehicle

If the remote controller is left in the vehicle and you lock all of the doors as described below, the door will be automatically unlocked.

- If you open the front door and turn the lock knob forward.

NOTE:

- *If you try to lock the doors without the remote controller, check that you have the remote controller in your hand. Otherwise, you may lock the remote controller in the vehicle.*
- *When the engine switch in ACC or ON mode, this function will operate regardless of the remote controller position.*
- *When the lead-acid battery completely runs out, this function will not operate.*

Range for detecting warning buzzer of inoperative request switch and function to prevent a key Left in the vehicle

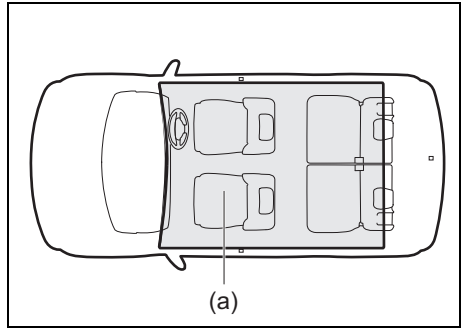

69T030330

The detection range (a) is the inside of the vehicle except the instrument panel.

NOTE:

- *Even if the remote controller is within the detection range (a), the remote controller may not be detected and the warning buzzer of inoperative request switch and the function to prevent a key left in the vehicle may not operate, in the following conditions:*
  - *When the battery of the remote controller runs down*
  - *When the remote controller is interfered with strong radio waves or noise*

- *When the remote controller is in contact with or covered by a metal object*
- *When the remote controller is in any of storage areas*
- *When the remote controller is in front of the instrument panel, in the sun visor, on the floor or in the luggage compartment*

- *Even if the remote controller is out of the detection range (a), the remote controller may be detected and the warning buzzer of inoperative request switch and the function to prevent a key left in the vehicle may operate, in the following conditions:*
  - *When the remote controller is outside of the vehicle and it is too close to the door*
  - *When the remote controller is on the instrument panel or in the luggage compartment*

Theft deterrent alarm system (if equipped)

A theft deterrent alarm system is armed in about 20 seconds after you close and lock all doors (including engine hood and tailgate) by using the keyless push start system remote controller or pushing the request switch. Once the system is armed, any attempt to open a door by using any other means* than the keyless push start system remote controller, pushing the request switch or open the engine hood will cause the alarm to be triggered.

* These means include the following:
  - The key
  - The lock knob on a door

NOTICE
Do not modify or remove the theft deterrent alarm system. If modified or removed, the system cannot be properly operated.

NOTE:

- *The theft deterrent alarm system generates alarms when any of the predetermined conditions is met. However, the system does not have any function of blocking unauthorized entry into your vehicle.*
- *Always use the remote controller or the request switch to unlock the doors when the theft deterrent alarm system has been armed. Using a key instead will trigger the alarm.*
- *If a person who does not know the theft deterrent alarm system is going to drive your vehicle, we recommend you explain the system and its operation to the person, or disable the system beforehand. Mistakenly triggering the alarm may cause a nuisance to others.*
- *Even if the theft deterrent alarm system is armed, you should still be careful to guard against theft. Do not leave money or things of value in your vehicle.*
- *The theft deterrent alarm system is maintenance-free.*

How to arm the theft deterrent alarm system (When enabled)

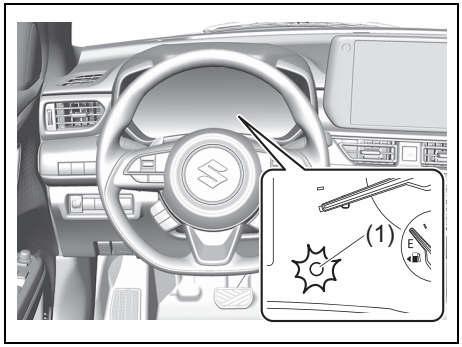

69T030100

Lock all doors (including the tailgate and engine hood) using the remote controller or the request switch. The theft deterrent light (1) will start blinking, and the theft deterrent alarm system will be armed in about 20 seconds.
While the system is being armed, the indicator continues to blink at intervals of approximately 2 seconds.

NOTE:
- *To prevent the alarm from being accidentally triggered, avoid arming it while anyone remains inside the vehicle. The alarm will be triggered if any person inside unlocks a door by operating the lock knob.*
- *The theft deterrent alarm system is not armed when all doors are locked using the key from outside, or using the door lock knobs.*
- *If any door is not operated within approximately 30 seconds after the doors have been unlocked using the remote controller or the request switch, the doors are automatically locked again. After the doors are locked, the theft deterrent alarm system will be armed in about 20 seconds if the system is in the enabled state.*

How to disarm the theft deterrent alarm system

Simply unlock the doors using the remote controller or the request switch. The theft deterrent light will go out, indicating that the theft deterrent alarm system is disarmed.

How to stop the alarm

Should the alarm be triggered accidentally, unlock the doors using the remote controller or the request switch, or press the engine switch to change the ignition mode to ON. The alarm will then stop.

NOTE:
- *Even after the alarm has stopped, if you lock the doors using the remote controller or the request switch, the theft deterrent alarm system will be rearmed with a delay of about 20 seconds.*
- *If you disconnect the lead-acid battery while the theft deterrent alarm system is in the armed condition or the alarm is actually in operation, the alarm will be triggered or re-triggered when the battery is then reconnected, although, in the latter case, the alarm remains stopped for the period between disconnection and reconnection of the lead-acid battery.*
- *Even after the alarm has stopped at the end of the predetermined operation time, it will be triggered again if any door is opened without disarming the theft deterrent alarm system.*

Checking whether the alarm has been triggered during parking

If the alarm was triggered due to an unauthorized entry into the vehicle and you then press the engine switch to change the ignition mode to ON, the theft deterrent light will blink rapidly for about 8 seconds and a buzzer will beep 4 times during this period. If this happens, check whether your vehicle has been broken into while you were away from it.

Theft deterrent light (if equipped)

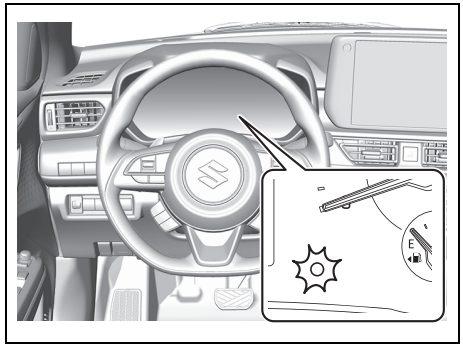

69T030130

This light will blink with the ignition mode LOCK (OFF) or ACC. The blinking light is intended to deter theft by leading others to believe that the vehicle is equipped with a security system.

Windows

Electric window controls

The electric windows can only be operated when the ignition mode is ON.

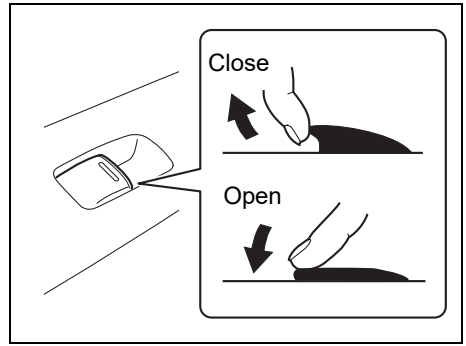

69T030150

⚠ WARNING

- **When opening or closing a window, a part of body such as hands, legs and neck may be caught by the window and an accident may occur. When you operate a window, observe the following precautions:**
  - **A driver and the other passengers should be careful when opening or closing a window.**
  - **Do not allow a child to operate the window switches.**
  - **You should always lock the passenger's window operation when there are children in the vehicle. Children can be seriously injured if they get part of their body caught by the window during operation. Refer to "Window lock switch" (P.3-19) for details.**
  - **When you leave your vehicle, make sure to press the engine switch to change the ignition mode to OFF. Then, carry your key with you and take a child or children out of the vehicle.**

(Continued)

⚠ WARNING

(Continued)

  - **When you open or close the front passenger's window or the rear windows on the driver's side, check that the other passengers and children do not take their hands and faces outside the vehicle, before the window operation. Also, make sure to inform them that you will perform the window operation.**
- **When you operate the electric window controls from the outside of the window, your hands or neck may be caught by the window and an accident may occur. Do not operate the electric window controls from the outside of the window.**

⚠ CAUTION

If you touch a window glass when opening or closing it, you may be caught by it. This may cause personal injury.
When you open or close a window glass, do not touch it.

NOTICE

If you open or close a window with the engine stopped, the lead-acid battery may discharge.
To protect the lead-acid battery, open or close a window with the engine running.

NOTE:

- *If only one of the rear windows is opened during driving, a loud sound may be heard. This happens because air pressure near the opened window changes. This is not a malfunction. This is the same phenomenon as the sound is heard when you blow your breath against an empty bottle sideways. You can reduce this sound with the rear window opened by the following operations:*
  - *Open one of the front window as well.*
  - *Change the opening range of the rear window. For example, if you currently open the rear window fully, open it partly.*
- *If only one of the front windows is opened during driving, a loud sound may be heard, as described above. You can reduce this sound with the front window opened by the following operations:*
  - *Open one of the rear windows as well.*
  - *Change the opening range of the front window. For example, if you currently open the front window fully, open it partly.*

Window lock switch

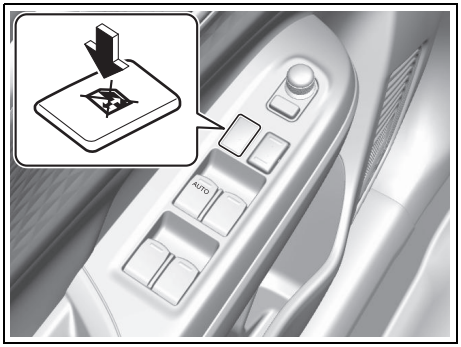

69T030140

The driver's door has the window lock switch for the passenger's window and the rear windows. When you push the lock side of the switch, the passenger's window and the rear windows cannot be opened or closed. To cancel the lock position, push the unlock side of the switch.

NOTE:
Even if the window lock switch is in the lock position, you can open or close the driver's window.

Opening or closing in driver's seat

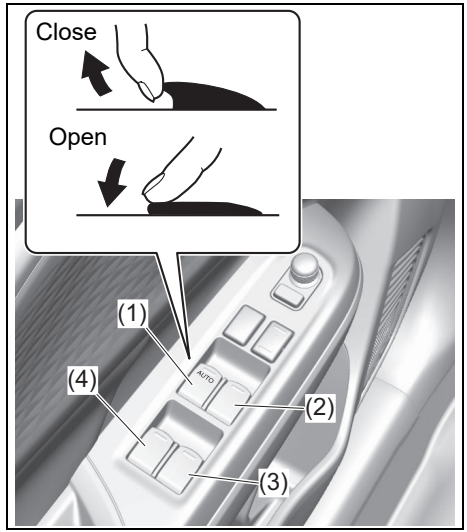

69T030160

The driver's door has a switch (1) to operate the driver's window, and a switch (2) to operate the front passenger's window or there are switches (3), (4), to operate the rear left and right passenger windows, respectively.

Auto-down and auto-up features for the driver's window

The driver's window has auto-down and auto-up features for added convenience (at toll booths or drive-through restaurants, for example). This means the driver can open or close the window without holding the window switch in the down or up position. Press down or lift up the driver's window switch completely and release it. To stop the window before it reaches the full-down or full-up position, pull up or push down the switch briefly.

Pinching prevention function

The driver's window is equipped with the pinching prevention function. The function detects a foreign object caught in the window while being closed by the auto-up feature, which you can close the window without holding the window switch in the up position, and stops the window closing to prevent damage.

⚠ WARNING

The function may not detect the object depending on shape, size, hardness and position of the object caught by the closing window. This may cause severe injury.
Be very careful when opening or closing the windows.

⚠ CAUTION

When auto-down and auto-up features are in operation or just before the window is fully closed, the pinching prevention function may not detect an object caught in the window.
While the pinching prevention function is in operation, be careful not to get your fingers caught by the window.

NOTE:
- *The pinching prevention function does not operate while you are holding the window switch in the up position.*
- *Even if you cannot close the window by the auto-up feature because there may be something wrong with the pinching prevention function, you can close the window by holding the window switch in the up position.*
- *If you drive in extreme off-road condition, the pinching prevention function may operate accidentally because the window reacts to vehicle jolting.*

When the pinching prevention function initialization is necessary

When you disconnect and reconnect the lead-acid battery or replace the fuse, the function will be deactivated. In this condition, the auto-down feature will be deactivated, while the auto-up feature may remain being activated. The pinching prevention function needs to be initialized.

⚠ WARNING

As the pinching prevention function will not operate until its initialization is completed, an accident may occur. Make sure to perform the pinching prevention function initialization.

NOTE:
When the driver's window cannot be automatically opened or closed, perform the pinching prevention function initialization.

How to perform the pinching prevention function initialization

1) Start the engine.
2) Open the driver's window fully by holding the window switch in the down position.
3) Close the driver's window by holding the switch in the up position, and keep holding the switch for 2 seconds after the window fully closed.
4) Check the driver's window if auto-down and auto-up features work.

If auto-down and auto-up features do not work after performing the above procedures repeatedly, there might be something wrong with the pinching prevention function. Have your vehicle inspected by an authorized SUZUKI dealer or a qualified workshop.

Opening or closing in passenger's seat and rear seats

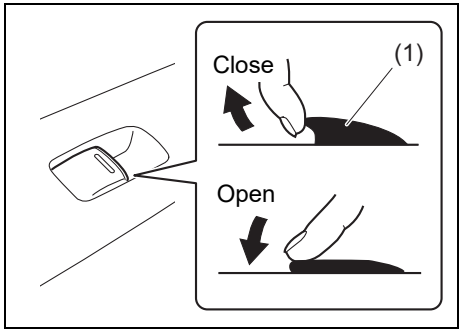

69T030170

The front passenger and the rear passengers can open or close the windows on the front passenger's seat and the rear seats respectively.

- Only while the window switch (1) is operated, the window will be opened or closed. When the passenger release his/her finger from the window switch, the window will stop moving.
- When there are children in the vehicle, set the window lock switch on the driver's door in the lock position. Refer to "Window lock switch" (P.3-19).

NOTE:
When the window lock switch is in the lock position, the windows on the passenger's seat and the rear seats cannot be opened or closed.

Lighting control lever

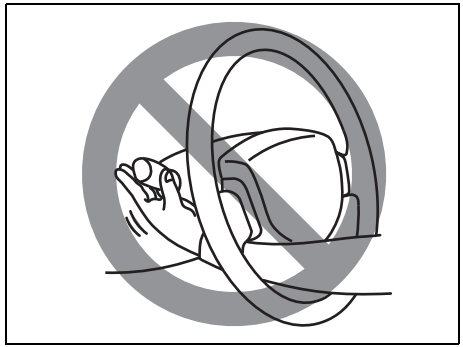

55S20025

⚠ WARNING

To avoid possible injury, do not operate controls by reaching through the steering wheel.

Automatic light operation

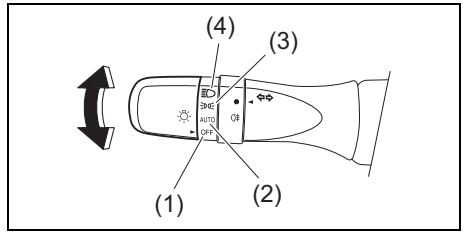

69T030230

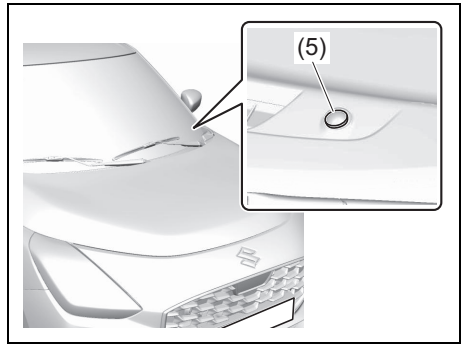

69T030180

Your vehicle's lighting system is controlled by two main systems: the lighting switch and the auto-on headlight system (when the lighting switch is in "AUTO" position).
The two systems work together to operate your lights as shown in the following chart:

ON: Lights ON
LIGHT: When it is light around the light sensor (5).
DARK: When it is dark around the light sensor (5).

Lighting switch position	Main lights to be operated	Ignition mode LOCK (OFF) or ACC		Ignition mode ON	
		LIGHT	DARK	LIGHT	DARK
(1) OFF	Position lights, Tail lights, License plate light	–	–	–	–
	Headlights	–	–	–	–
(2) AUTO	Position lights, Tail lights, License plate light	–	–	–	ON
	Headlights	–	–	–	ON
(3)	Position lights, Tail lights, License plate light	ON	ON	ON	ON
	Headlights	–	–	–	–
(4)	Position lights, Tail lights, License plate light	ON	ON	ON	ON
	Headlights	ON	ON	ON	ON

To turn the lights on or off, twist the knob on the end of the lever. There are four positions:

OFF (1)
All lights are off.

AUTO (2)
This function works when the engine switch is pressed to change the ignition mode to ON. The headlights, position lights, tail lights and license plate light are turned on and off automatically according to the amount of outside light detected by a sensor. They go out automatically when you change the ignition mode to ACC or LOCK (OFF) by pressing the engine switch.

The light sensor (5) for sensing the amount of outside light is installed on the passenger's seat side of instrument panel.

When the following conditions are met, you can use the high beam assist.
- The engine switch is pressed to change the ignition mode to ON
- The headlights are turned on when it becomes dark outside the vehicle
- The lighting switch is in "AUTO" position

For details, refer to "High beam assist" (P.5-92).

⚠ CAUTION

If the light sensor area of the windshield is covered with mud, ice, or other similar substances, the headlights, position lights, tail lights and license plate light may be turned on even when it is still light outside.

NOTE:
- *Avoid covering the light sensor area of the windshield with a sticker. The sticker may impair the performance of the sensor and make the system unable to control operation of the lights correctly.*
- *If you changed the ignition mode to ON by pressing the engine switch and "AUTO" position remains selected, the headlights, position lights, tail lights and license plate light come on automatically as it gets dark outside, even with the engine not running. Leaving the lights lit for a long time may lead to a completely discharged battery.*

(3)
Front position lights, tail lights, license plate light and instrument lights are on, but headlights are off.

(4)
Front position lights, tail lights, license plate light, instrument lights and headlights are on.

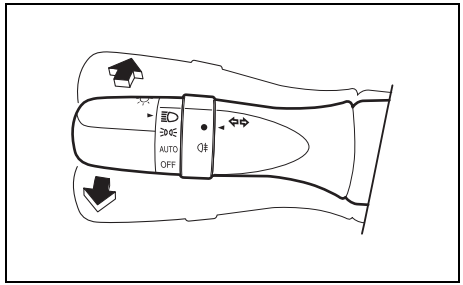

69T030240

With the headlights on, push the lever forward to switch to the high beams (main beams) and pull the lever toward you to switch to the low beams. When the high beams (main beams) are on, a light on the instrument cluster will come on. To momentarily activate the high beams (main beams) as a passing signal, pull the lever slightly toward you and release it when you have completed the signal.

NOTE:
The high beam assist will be activated when the lighting switch is in "AUTO" position. Refer to the "High beam assist" (P.5-92).

Auto-on headlight system

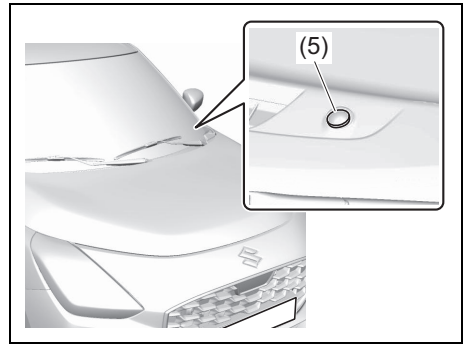

69T030180

The auto-on headlight system automatically turns on all lights that are operated by the lighting switch, when the following three conditions are all met.

Conditions for auto-on headlight system operation:
1) It is dark around the light sensor (5).
2) The lighting switch is in "AUTO" position.
3) You press the engine switch to change the ignition mode to ON.

This system is activated by a signal from the light sensor (5) on the passenger's seat side of instrument panel. Do not cover the sensor (5). Otherwise, the system will not work correctly.

⚠ WARNING

It takes about 5 seconds for the light sensor to react to a change in lighting conditions. To help avoid an accident due to reduced visibility, turn on your headlights before driving into a tunnel, parking structure, etc.

NOTE:
The light sensor reacts even to infrared rays, so it may operate incorrectly when there are strong infrared rays.

Light reminder buzzer

The interior buzzer continuously beeps if you open the driver's door without turning off the headlights and position lights. This function is triggered under the following condition:
The headlights and/or position lights are on even after the engine switch is pressed to change the ignition mode to LOCK (OFF).

The buzzer stops sounding when you turn off the headlights and position lights.

NOTE:
A message is indicated on the information display in the instrument cluster while the buzzer is sounding.

Daytime Running Light (D.R.L.) system

When the engine is started, the daytime running lights are turned on by this system.

Conditions for D.R.L. system operation
1) The engine is running.
2) Headlights is off.
3) Turn signal light is off.

NOTE:
- *Brightness of the daytime running lights is different from the brightness of the position lights, but it is not a malfunction.*
- *When using the turn signal light, the Daytime Running Light on the side where the turn signal light is blinking goes off.*

Guide me light

Guide me light has two functions of "To home" and "To car" for improving your visibility in the dark.

"To home" function
Even after you leave the car, the ground will be illuminated for a short while with this function. You can turn on the front position lights and the headlights in the low beam setting for about 10 seconds after the engine switch is pressed to change the ignition mode to LOCK (OFF).

To set the function:
1) Turn the lighting switch to "AUTO" position.
2) Press the engine switch to change the ignition mode to LOCK (OFF).
3) Pull the lighting control lever toward you once and open the driver's side door within 60 seconds. Or pull the lighting control lever toward you once while the driver's side door is open.

To cancel the function:
Perform any of the following operations.
- Pull the lighting control lever toward you once.
- Change the ignition mode to ACC or ON by pressing the engine switch.
- Turn the lighting switch to any other position than “AUTO” position.

NOTE:
- *When the “To home” is functioning, rear fog light and the headlights (high beam) are not turned on.*
- *Lighting time of the “To home” function can be changed on the information display. Refer to “Setting mode of information display” (P.12-8).*

“To car” function
Before you get in the vehicle, the ground will be illuminated for a short while to easily lead the driver to the vehicle. If UNLOCK button of the keyless push start system remote controller is pressed while the lighting switch is positioned in “AUTO”, the front position lights and the headlights in the low beam are turned on for 10 seconds.
This function will operate only when it is dark outside the vehicle.

To cancel the function:
Perform any of the following operations.
- Lock the doors by using the keyless push start system remote controller, the request switch or the key in the driver’s door lock.
- Change the ignition mode to ACC or ON by pressing the engine switch.
- Turn the lighting switch to any other position than “AUTO” position.

NOTE:
- *When the “To car” is functioning, rear fog light and the headlights (high beam) are not turned on.*
- *Lighting time of the “To car” function can be changed on the information display. Refer to “Setting mode of information display” (P.12-8).*

Rear fog light switch

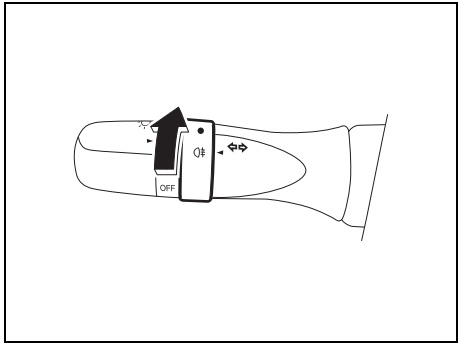

69T030250

To turn the rear fog light on, twist the knob as shown in the illustration with the headlights on. When the rear fog light is on, an indicator light on the instrument cluster will come on.

⚠ CAUTION

Use the rear fog light to alert the following vehicle of your presence when visibility is poor due to rain, fog, etc. When visibility is good, do not use it as it will disturb the following vehicles.

Headlight leveling switch

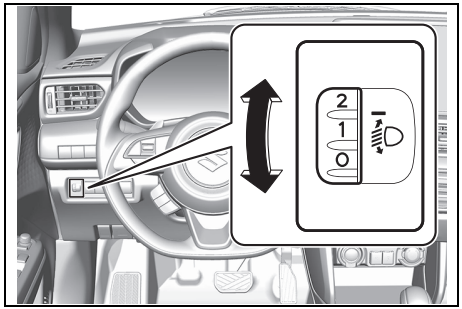

69T030280

Level the headlight beam according to the load condition of your vehicle by turning this switch. The chart shows the appropriate switch position for different vehicle load conditions.

Vehicle Load Condition	Switch Position
Driver only	0
Driver + 1 passenger (in front seat)	0.5
Driver + 4 passengers, no cargo	2.5
Driver + 4 passengers, cargo added	3
Driver + full cargo	4.5

Turn signal control lever

You can use the turn signal control lever when the engine switch is in ON mode.

Turn signal operation

With the ignition mode ON, move the lever upward or downward to activate the right or left turn signals.

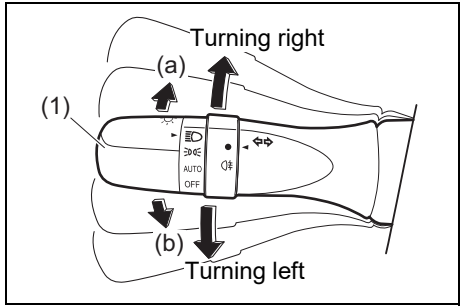

69T030260

- Move the turn signal control lever (1) as follows:
  – Turning left: Move the lever downward.
  – Turning right: Move the lever upward
- When you move the lever, the turn signal lights and the turn signal light indicators on the instrument cluster will flash simultaneously.
- When you move the lever to its original position, the turn signal lights and the turn signal light indicators on the instrument cluster will be turned off.
- When changing lanes, if you lightly press the turn signal control lever in the directions (a) or (b) in which you want to change lanes, the turn signal lights and turn signal light indicators on the instrument cluster will flash only while the turn signal control lever is pressed.

NOTE:
If the angle by which you turn the steering wheel is small, the lever will not return automatically to its original position. In this case, return the lever to its original position manually.

Lane change signal

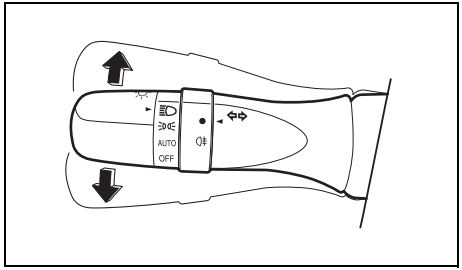

69T030270

Move the lever partially upward or downward to turn right or left and hold the lever in the moved position.

- The turn signal and its indicator flash while the lever is held at the moved position.
- The turn signal and its indicator flash 3 times even if you returned the lever immediately after the activation.

NOTE:

- *The turn signal and its indicator can be set whether they flash 3 times after the turn signal lever is returned via the information display. Refer to "Setting mode of information display" (P.12-8).*
- *You can customize the setting for the number of flashing times of the turn signal and its indicator (1 to 4 times). Please ask an authorized SUZUKI dealer or a qualified workshop for the customization.*

Hazard warning switch

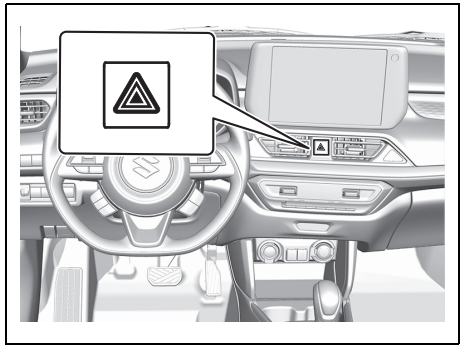

69T030190

You can use the hazard warning switch to warn the other drivers of possible risk of traffic hazard when you park your vehicle in case of emergency.

- Push the hazard warning switch to activate the hazard warning lights. All turn signal lights and both turn signal indicators will flash simultaneously.
- Push the switch again to turn off the hazard warning switch.
- The instrument panel in the above figure is a typical example; the actual equipment depends on the vehicle type.

NOTICE

If you use the hazard warning switch for many hours with the engine stopped, the lead-acid battery may run out.
Do not use the hazard warning switch for many hours with the engine stopped.

Windshield wiper and washer lever

When the engine switch is in ON mode, you can use the wiper/washer lever.

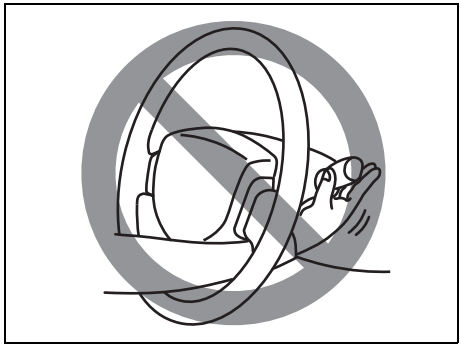

52SS30040

⚠ WARNING

To avoid possible injury, do not operate controls by reaching through the steering wheel.

⚠ CAUTION

In cold weather, the sprayed washer fluid on the glass may get frozen and it may cause poor visibility to a driver. Use the defroster to warm the glass and spray the washer fluid. Refer to "Manual air conditioning system (with digital control panel)" (P.7-18) or "Automatic heating and air conditioning system (climate control)" (P.7-25).

NOTICE

- **If you use the wipers with the glass dried, the glass and the wiper blade rubbers may be damaged. When the glass is dry, use the washer fluid and then use wipers.**
- **If you operate the wipers with the wiper blades stuck on the glass, the wiper blade rubbers may be damaged or the wipers may be broken. When the wiper blades are stuck on the glass, do not operate the wipers.**
- **If you use the washer when the washer fluid cannot be sprayed enough, the washer pump may be broken. When the washer fluid cannot be sprayed enough, turn off the washer switch.**

When the operative wipers suddenly stop

When the wipers are under heavy load such as covered by snow and the temperature of the wiper motor becomes high, the breaker will be activated and the wipers will temporarily stop to protect the wiper motor from overheating.
If this happens, perform the following operations:

1) Stop the vehicle in a safe place, and press the engine switch to change the ignition mode to ACC or LOCK (OFF).
2) Move the wiper lever and switch to "OFF" position.
3) Remove obstacles such as snow on the wipers.
4) After a while, when the temperature of the wiper motor becomes low enough, the breaker will be reset automatically and you can use the wipers.

If you cannot use the wipers after a while, there may be another problem. Ask a SUZUKI dealer or a qualified workshop to have the wipers inspected.

Wiper and washer operation

When the ignition mode is ON, you can use the wiper/washer lever.

When the wipers are under heavy load such as covered by snow, the breaker will be activated and the wipers will stop operating to protect the wiper motor from overheating.
If the wiper stops during operation, do the following methods.

1) Stop the vehicle in a safe place, and turn the engine off.
2) Move the wiper lever and switch to “OFF” position.
3) Remove obstacles such as snow on the wipers.
4) After a while, when the temperature of the wiper motor becomes low enough, the breaker will be reset automatically and the wipers will be able to use.

If you cannot use the wipers after a while, there may be another problem. Ask an authorized SUZUKI dealer or a qualified workshop to have the wipers inspected.

Windshield wipers

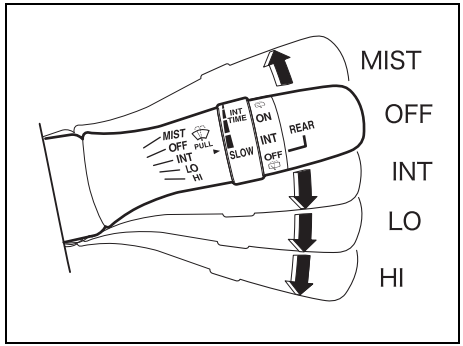

68PM00237

You can operate the windshield wipers by moving the lever upward or downward.

MIST	Temporary operation only while the lever is up
OFF	Off
INT	Intermittent operation
LO	Low speed operation
HI	High speed operation

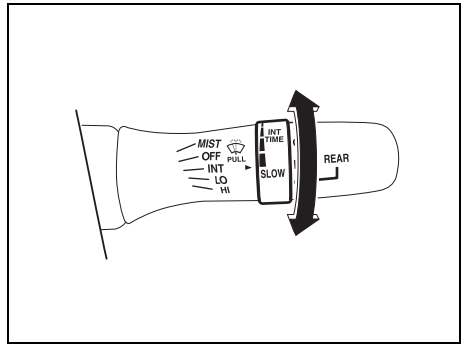

68PM00238

The lever is equipped with the “INT TIME” control. Turn the control forward or rearward to adjust the intermittent wiper operation to the desired interval.

Windshield washer

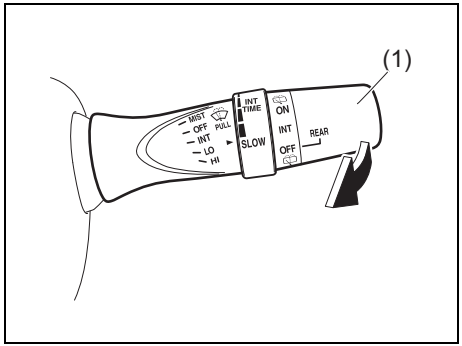

76TS30330

To spray windshield washer fluid, pull the lever (1) toward you. The windshield wipers will automatically turn on at low speed if they are not already on and your vehicle is equipped with “INT” position.

⚠ WARNING

- **To prevent windshield icing in cold weather, turn on the defroster to heat the windshield before and during windshield washer use.**
- **Do not use radiator antifreeze in the windshield washer reservoir. It can severely impair visibility when sprayed on the windshield, and can also damage your vehicle’s paint.**

NOTICE

To help prevent damage to the windshield wiper and washer system components, you should take the following precautions:

- **Do not continue to hold in the lever when there is no windshield washer fluid being sprayed or the washer motor can be damaged.**
- **Do not attempt to remove dirt from a dry windshield with the wipers or you can damage the windshield and the wiper blades. Always wet the windshield with washer fluid before operating the wipers.**
- **Clear ice or packed snow from the wiper blades before using the wipers.**
- **Check the washer fluid level regularly. Check it often when the weather is bad.**
- **Fill a reservoir to 3/4 level with washer fluid for its expansion, if temperature falls low enough to freeze the fluid.**

Rear window wiper

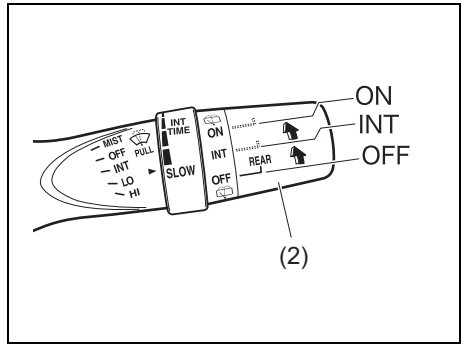

80T030340

You can operate the rear window wiper by twisting the lever (2) as shown in the illustration.

ON	Normal operation
INT	Intermittent operation
OFF	Off

With the rear wiper in “OFF” position, twist the switch rearward and hold it there to spray window washer fluid.

With the rear wiper in “ON” position, turn the switch forward and hold it there to spray window washer fluid.

NOTICE

Clear ice or snow from the rear window and rear wiper blade before using the rear wiper. Accumulated ice or snow could prevent the wiper blade from moving, causing damage to the wiper motor.

Rear window washer

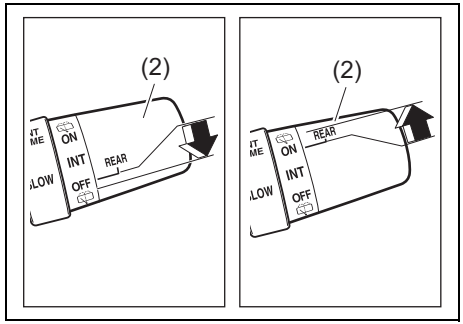

76TS30350

- If you twist the lever (2) in the direction of ⬆ and align it to (washer) position above “ON” position, the rear window washer fluid will be sprayed and the rear wiper will operate simultaneously. If you release your hand from the lever, it will return to “ON” position.
- If you twist the lever (2) in the direction of ⬇ and align it to (washer) position below “OFF” position, the rear window washer fluid will be sprayed and the rear wiper will operate simultaneously. If you release your hand from the lever, it will return to “OFF” position.

Horn

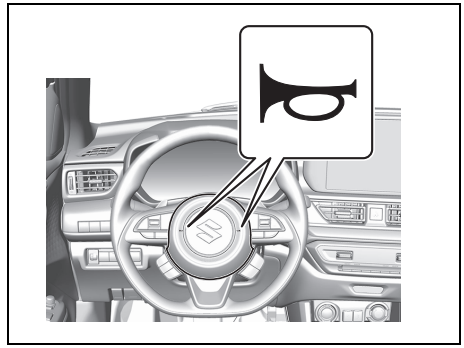

69T030200

Press the horn button of the steering wheel to sound the horn. The horn will sound with the engine switch in any position.

Heated rear window switch/ heated outside rearview mirror switch

Type 1

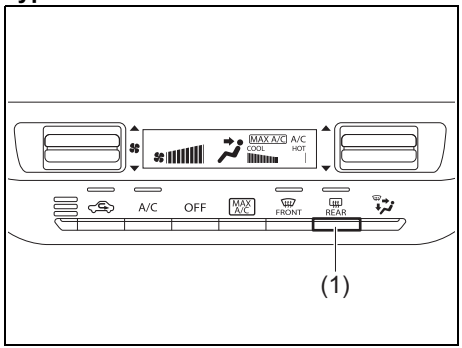

69T030210

Type 2

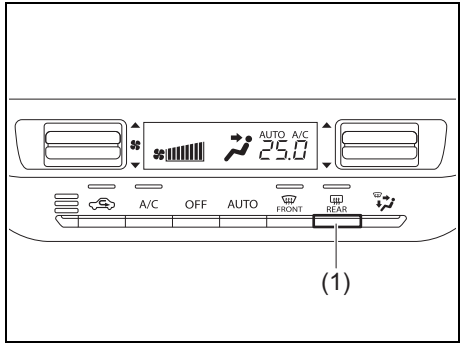

69T030220

When the rear window is misted, push this switch (1) to clear the window.

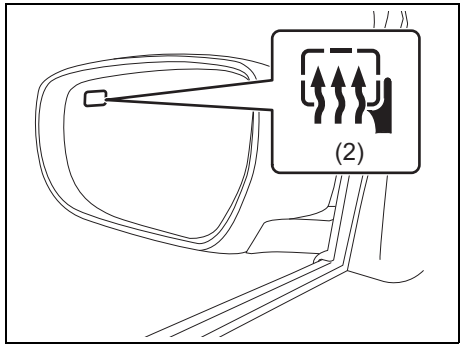

52RM20450

If the outside rearview mirror has the mark (2), it is also equipped with the heated outside rearview mirrors. When you push the switch (1), both the heated outside rearview mirrors and the heated rear window will operate simultaneously.

An indicator light will come on when the defogger is on. The defogger will work only when the engine is running. To turn off the defogger, push the switch (1) again.

NOTICE
The heated rear window and the heated outside rearview mirrors use a large amount of electricity. Turn off the switch after the window and mirrors have become clear.

NOTE:

- *The defogger will work only when the engine is running.*
- *The defogger will automatically turn off after the defogger remains on for 15 minutes to prevent discharging of the lead-acid battery.*
- *If your vehicle is equipped with heated outside rearview mirrors, only the driver's side outside rearview mirror has the mark (2), but both outside rearview mirrors work simultaneously.*

MEMO

INSTRUMENT CLUSTER

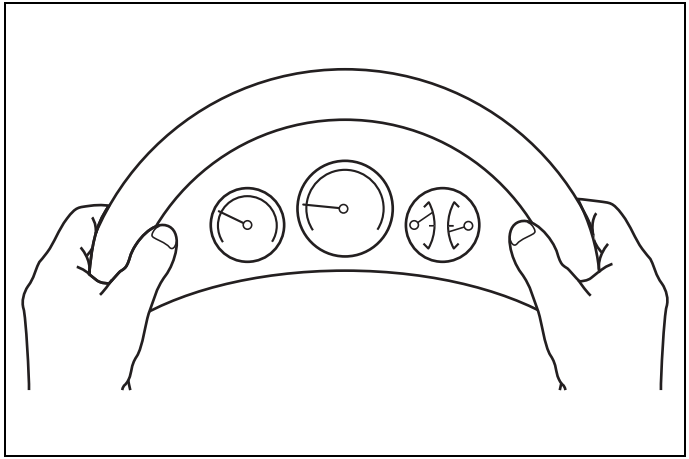

59RN04640

Instrument cluster 4-1
Speedometer 4-2
Tachometer 4-2
Fuel gauge 4-2
Temperature gauge 4-3
Brightness control 4-3
Information display 4-4
Warning and indicator lights 4-39

Instrument cluster

(1) Trip meter selector knob
(2) Tachometer
(3) Warning and indicator lights
(4) Speedometer
(5) Indicator selector knob
(6) Temperature gauge
(7) Information display
(8) Fuel gauge

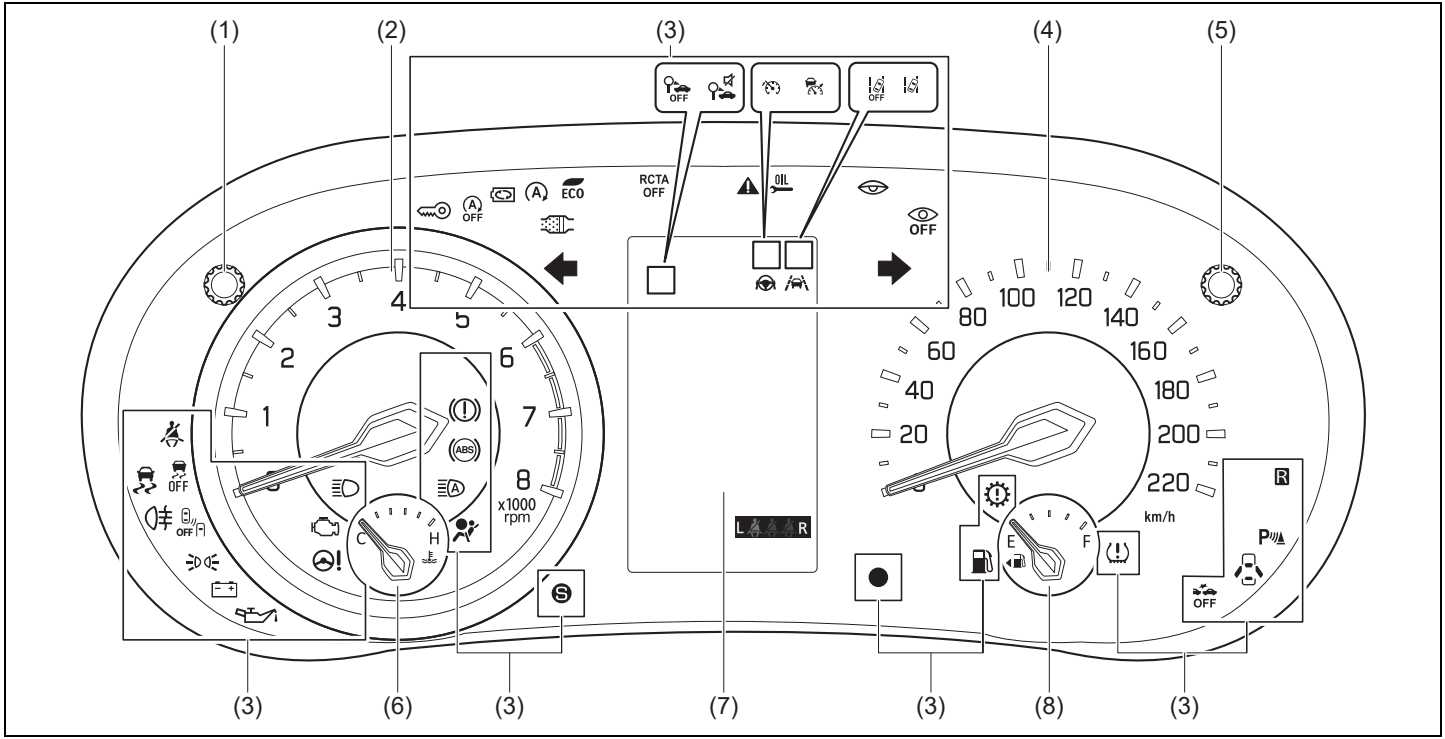

69T04001R

Speedometer

The speedometer indicates vehicle speed.

Tachometer

The tachometer indicates engine speed in revolutions per minute.

NOTICE
Never drive the vehicle with the engine revving in the red zone or severe engine damage can result. **Keep the engine speed below the red zone even when downshifting to a lower gear position.** **Refer to "Downshifting maximum allowable speeds" (P.5-39).**

Fuel gauge

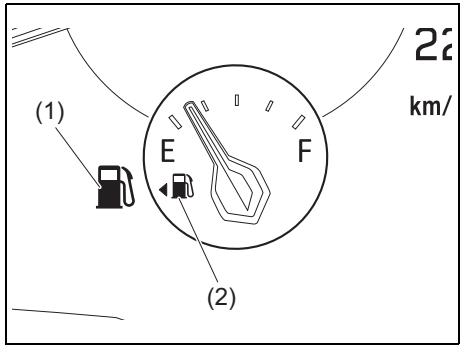

69T040020

When the ignition mode is ON, this gauge gives a rough indication of the amount of fuel in the fuel tank. "F" stands for full and "E" stands for empty.

If the indicator approaches a low level (near "E") on fuel gauge, refill the tank as soon as possible.

NOTE:
The indicator moves a little depending on road conditions (for example, slope or curve) and driving conditions because of fuel movement in the tank.

If the low fuel warning light (1) comes on, refill the fuel tank as soon as possible.

Refer to "Low fuel warning light" (P.4-43) for details.

The mark (2) indicates that the fuel filler door is located on the left side of the vehicle.

Temperature gauge

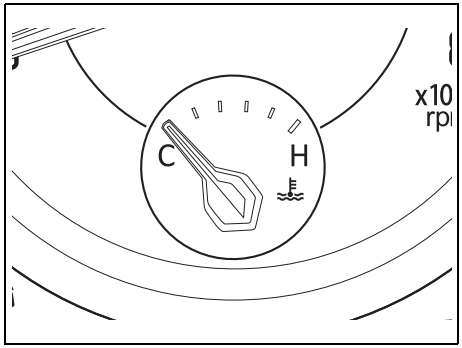

69T040030

When the ignition mode is ON, this gauge indicates the engine coolant temperature. Under normal driving conditions, the indicator should stay within the normal, acceptable temperature range between “H” and “C”. If the indicator approaches “H”, overheating is indicated. Follow the instructions for “Engine trouble: Overheating” in the “EMERGENCY SERVICE” section.

NOTICE

Continuing to drive the vehicle when engine overheating is indicated can result in severe engine damage.

Brightness control

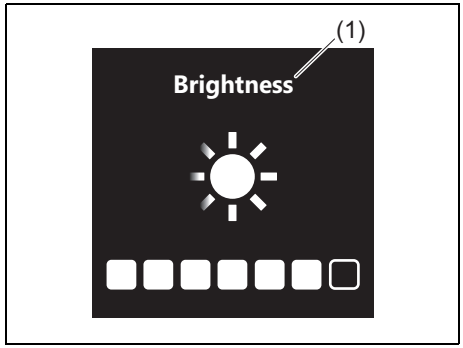

69T040510

(1) Brightness

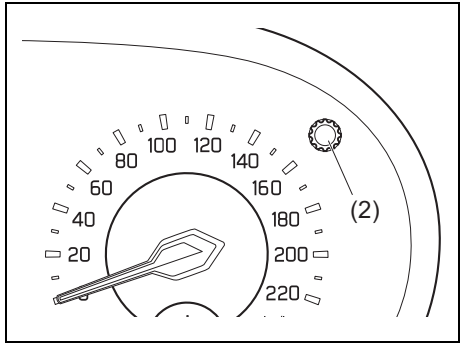

69TJ040020

When the ignition mode is ON, the instrument panel lights come on.

Your vehicle has a system to automatically dim the brightness of the instrument panel lights when the position lights or headlights are on.

When the position lights and/or headlights are on, you can adjust the meter illumination brightness.

To increase the brightness of the instrument panel lights, turn the indicator selector knob (2) clockwise.

To reduce the brightness of the instrument panel lights, turn the indicator selector knob (2) counterclockwise.

⚠ WARNING

Do not adjust the brightness of the instrument panel lights while driving. Otherwise, you could lose control of the vehicle.

NOTE:

- *If you do not turn the knob within several seconds of activating, the brightness control display will be canceled automatically.*
- *When you reconnect the lead-acid battery, the brightness of the instrument panel lights will be reinitialized. Readjust the brightness according to your preference.*

- *If you adjust to the maximum brightness level when the position lights or headlights are on, the following functions will be cancelled.*
  - *The function which automatically dims the brightness of instrument panel lights*
  - *The function which operates with the brightness control, except maximum brightness level*
- *In the vehicle equipped with infotainment system, the screen becomes the daytime screen (bright color) when the instrument panel lights brightness is maximized.*

Information display

The information display is shown when the ignition mode is ON.

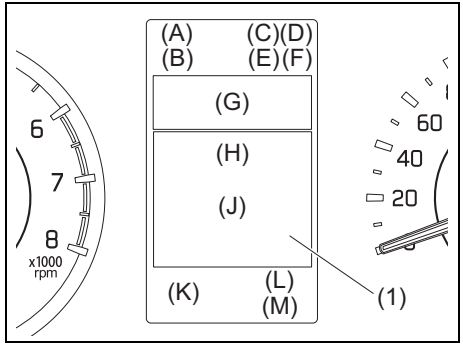

69T040050

(1) Information display

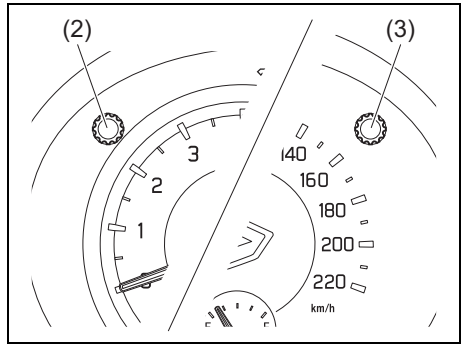

69T040060

(2) Trip meter selector knob
(3) Indicator selector knob

The information display shows the following information.

Display (A)
Clock

Display (B)
Traffic sign recognition OFF indicator light (if equipped) /
Traffic sign recognition buzzer OFF indicator light (if equipped)

Display (C)
Speed limiter (if equipped) /
Adaptive cruise control indicator light

Display (D)
Lane departure prevention indicator light / Lane departure prevention OFF indicator light

Display (E)
steering assist indicator light

Display (F)
Lane keep assist indicator light

Display (G)
Traffic sign recognition (if equipped) / Following distance indicator / Preceding vehicle mark of adaptive cruise control / Set speed / Lane keep assist / Lane departure warning / Dual Sensor Brake Support II (DSBS II) warning

Display (H) and (J)
Warning and indicator messages / Fuel consumption / Driving range / Average speed / Driving time / Total idling stop time and total idling fuel saved (if equipped) / Clock and date / Motion / Torque and power / Accelerator and brake / Energy flow (if equipped) / Vehicle speed / Adaptive cruise control system (if equipped) / Cruise control (if equipped) / Speed limiter (if equipped) / Dual Sensor Brake Support II (DSBS II) system / Lane departure prevention system / Lane keep assist / Blind Spot Monitor (if equipped) / Rear Cross Traffic Alert (if equipped)

Display (K)
Selector position (for CVT vehicle) / Gear position (for CVT vehicle with manual mode) / Gearshift indicator (if equipped)

Display (L)
Rear passenger's seat belt reminder / Outside temperature

Display (M)
Odometer / Trip meter

55T040250

When the engine switch is pressed to change the ignition mode to ON, the start-up sound of the instrument cluster will sound and the above image will appear on the display for several seconds.
Some warning and indicator messages may appear on the display when the ignition mode is ACC or LOCK (OFF).

NOTE:
The settings of the start-up sound can be changed through the information display setting mode. For details, refer to "Setting mode of information display" (P.12-8).

Clock

The display (A) shows the time.

To set the clock, follow "Setting mode of information display" instructions in this section.

Thermometer / ENG A-STOP indicator light / ENG A-STOP OFF light

Thermometer
The display (L) shows the thermometer.

The thermometer indicates the outside temperature.

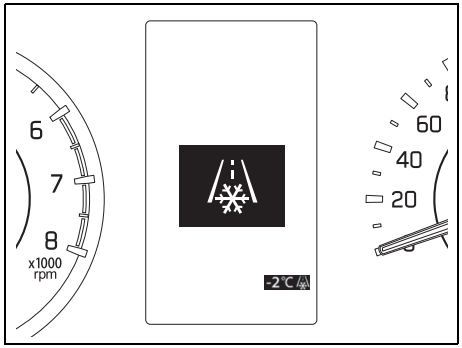

69T040080

If the outside temperature nears freezing condition, the message shown in the above illustration will appear on the display.

To change the temperature unit between "°C" and "°F", follow "Setting mode of information display" instructions in "SPECIFICATIONS" section.

NOTE:
The outside temperature indication is not the actual outside temperature when driving at low speed, or when stopped.

ENG A-STOP indicator light / ENG A-STOP OFF light
Refer to "ENG A-STOP indicator light" (P.4-50) or "ENG A-STOP OFF light" (P.4-50).

Fuel consumption / Driving range / Average speed / Driving time / Total idling stop time and total idling fuel saved / Clock and date / Motion / Torque and power / Accelerator and brake / Energy flow / Vehicle speed / Intersection guidance

When there are no warning or indicator messages on the display (J), you can select one of the following indications to appear on the display: instantaneous fuel consumption, average fuel consumption, driving range, average speed, driving time, total idling stop time and total idling fuel saved, clock and date, motion, torque and power, accelerator and brake, boost pressure and engine oil temperature (if equipped), energy flow, vehicle speed, intersection guidance (if equipped) or no indication (or SUZUKI SAFETY SUPPORT image and message).

⚠ WARNING

If you attempt to adjust the display while driving, you could lose control of the vehicle. Do not attempt to adjust the display while driving.

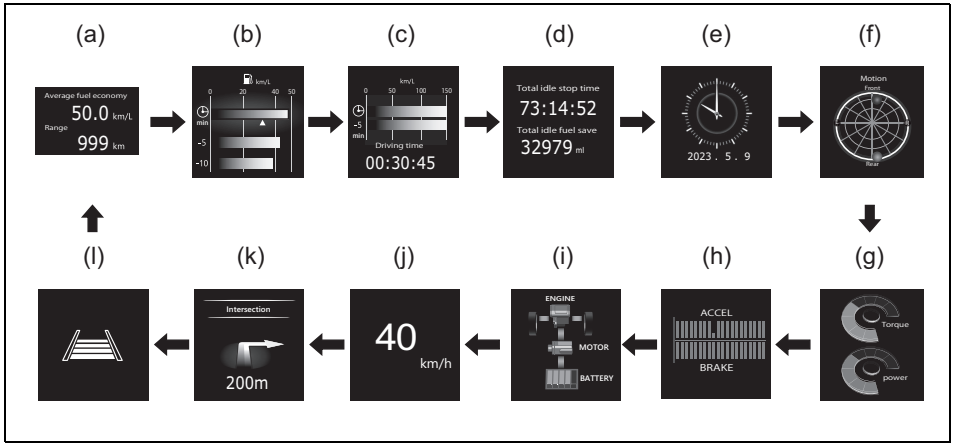

69T040070

(a) Instantaneous fuel consumption / Average fuel consumption / Driving range
(b) Instantaneous fuel consumption / Average fuel consumption / 5-minute average fuel consumption
(c) Average speed / 5-minute average speed / Driving time
(d) Total idling stop time and total idling fuel saved (if equipped)
(e) Clock and date
(f) Motion
(g) Torque and power
(h) Accelerator and brake
(i) Energy flow (if equipped)
(j) Vehicle speed
(k) Intersection guidance (if equipped)
(l) No indication or SUZUKI SAFETY SUPPORT image and message

To switch the display indication, push the indicator selector knob (3) quickly.

NOTE:
The value of instantaneous fuel consumption, average fuel consumption, driving range, average speed, total idling fuel saved, motion, torque and power, accelerator and brake and energy flow shown on the display are affected by the following conditions;
- *road condition*
- *surrounding traffic condition*
- *driving condition*
- *vehicle condition*

- *a malfunction which causes the malfunction indicator light to come on or blink*

Instantaneous fuel consumption
The display shows instantaneous fuel consumption with a bar graph only when the vehicle is moving.

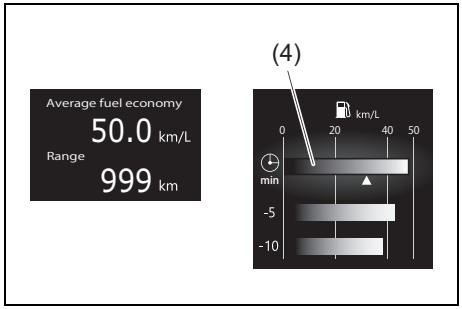

69T040360

(4) Instantaneous fuel consumption

NOTE:
- *The display does not show the bar graph unless the vehicle is moving.*
- *Depending on the vehicle's specification, the fuel consumption units of initial setting are indicated as L/100km, km/L or MPG.*
- *For "L/100km" setting, the indicated maximum value of instantaneous fuel consumption is 30. No more than 30 will be indicated on the display even if the actual instantaneous fuel consumption is higher.*
- *For "km/L" setting, the indicated maximum value of instantaneous fuel consumption is 50. No more than 50 will be indicated on the display even if the actual instantaneous fuel consumption is higher.*
- *For "MPG(UK)" setting, the indicated maximum value of instantaneous fuel consumption is 80. No more than 80 will be indicated on the display even if the actual instantaneous fuel consumption is higher.*
- *The indication on the display may be delayed if fuel consumption is greatly affected by driving conditions.*
- *The display shows estimated values. Indications may not be the same as actual values.*

Average fuel consumption / 5-minute average fuel consumption / 1-driving cycle average fuel consumption
Average fuel consumption from previous reset and 5-minute average fuel consumption, and 1-driving cycle average fuel consumption are shown.

(Average fuel consumption)

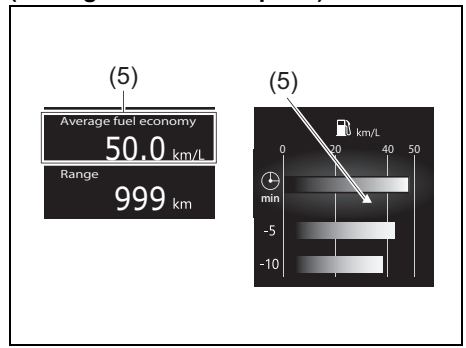

69T040370

(5) Average fuel consumption

If you selected average fuel consumption the last time you drove the vehicle, the display shows the last value of average fuel consumption from previous driving when the engine switch is pressed to change the ignition mode to ON. Unless you reset the value of average fuel consumption, the display indicates the value of average fuel consumption based on the average fuel consumption during previous driving.

NOTE:
When you reconnect the negative (–) terminal to the lead-acid battery, the value of average fuel consumption will be shown after driving for a period of time.

You can select the timing to reset the value of average fuel consumption by one of the following three methods;

- Reset after refuel: the value of average fuel consumption will be reset automatically by refueling.
- Reset with trip meter A: the value of average fuel consumption will be reset automatically by resetting trip meter A.
- Reset manually: the value of average fuel consumption will be reset by pushing and holding the indicator selector knob (3) when the display indicates the average fuel consumption.

To change the timing to reset the value of average fuel consumption, refer to “Setting mode of information display” (P.12-8).

NOTE:
If you add only a small amount of fuel when you select “After refuel”, the average fuel consumption value may not be reset.

(5-minute average fuel consumption)

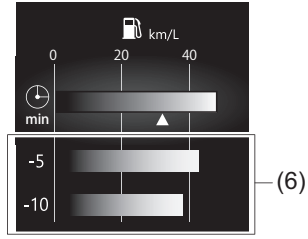

69T040380

(6) 5-minute average fuel consumption

(1-driving cycle average fuel consumption)

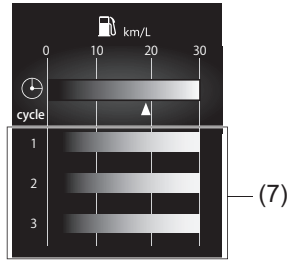

69T040390

(7) 1-driving cycle average fuel consumption

You can check transition of average fuel consumption every 5 minutes from 15 minutes before up to now. Also, you can check transition of average fuel consumption the past 3 driving cycles. Time indication and driving cycle indication can be changed. For details, refer to “Setting mode of information display” (P.12-8).

Driving range

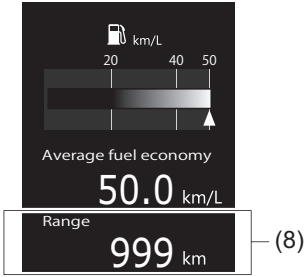

69T040400

(8) Driving range

If you selected driving range the last time you drove the vehicle, the display indicates "---" for a few seconds and then indicates the current driving range when the engine switch is pressed to change the ignition mode to ON.

The driving range shown in the display is the approximate distance you can drive until the fuel gauge indicates "E", based on current driving conditions.

When the low fuel warning light comes on, the display "---" will appear.
If the low fuel warning light comes on, fill the fuel tank immediately regardless of the value of driving range shown in the display.

When you refuel, the driving range is updated. However, if you only add a small amount of fuel, the correct value will not be displayed.

NOTE:
- *If you refuel when the ignition mode is ON, the driving range may not indicate the correct value.*
- *When you reconnect the negative (–) terminal to the lead-acid battery, the value of driving range will be shown after driving for a period of time.*

Average speed / 5-minute average speed
Average speed from previous reset and 5-minute average speed are shown.

(Average speed)

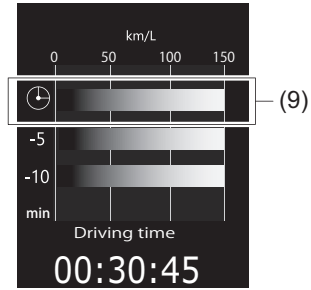

69T040410

(9) Average speed

If you selected average speed the last time you drove the vehicle, the display indicates the last value of average speed from previous driving when the engine switch is pressed to change the ignition mode to ON. Unless you reset the value of average speed, the display indicates the value of average speed which includes average speed during previous driving.

To reset the value of average speed, push and hold the indicator selector knob (3) for about 2 seconds when the display indicates an average speed. The display shows "---" and then indicates a new average speed after driving for a short time.

NOTE:
When you reconnect the negative (–) terminal to the lead-acid battery, the value of average speed will be shown after driving for a period of time.

(5-minute average speed)

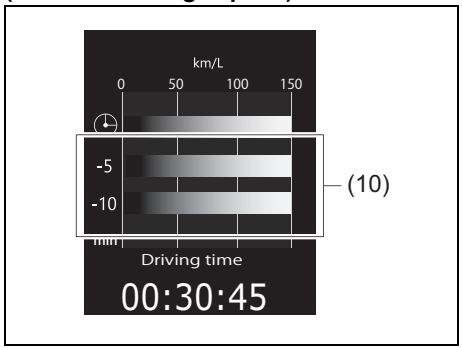

69T040420

(10) 5-minute average speed

You can check transition of 5-minute average speed every 5 minutes from 10 minutes before up to now.

Driving time

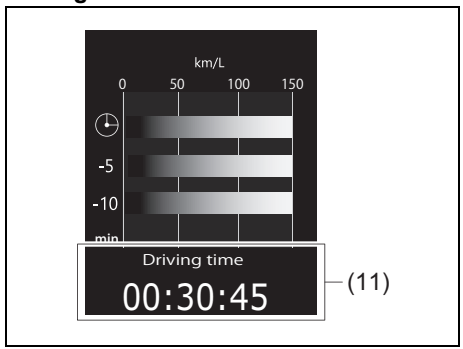

69T040430

(11) Driving time

Driving time from previous reset is shown. To reset the driving time, push and hold the indicator selector knob (3) for about 2 seconds when the display indicates a driving time. The display shows "---" and then indicates a new driving time after driving for a short time.

NOTE:
- *Disconnection of the lead-acid battery negative (-) terminal will reset the indication of the driving time.*
- *The indicated maximum value of driving time is 99:59:59. No more than this value will be indicated on the display until you reset the driving time.*

Total idling stop time and total idling fuel saved (if equipped)

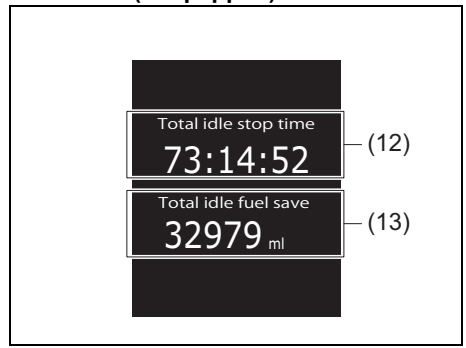

69T040440

(12) Total idling stop time
(13) Total idling fuel saved

The display shows the total length (in hours, minutes and seconds) of engine stopping time and the total amount (in milliliters) of fuel conservation by ENG A-STOP system since the indication was reset.
- To reset the total idling stop time and the total idling fuel saved, push and hold the indicator selector knob (3) for a while when the display shows the total idling stop time and the total idling fuel saved.

NOTE:
- *The indicated maximum value of the total idling stop time is 99:59:59 and this value is fixed until it is reset.*

- *When you reconnect the negative (–) terminal to the lead-acid battery, the value of the total idling stop time and the total idling fuel saved will be reset.*

Clock and date
Date and time are shown. For the setting procedure, refer to “Setting mode of information display” (P.12-8).

Motion

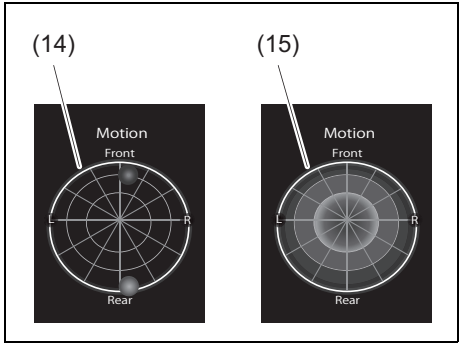

69T040450

This indicates how the center of gravity is moved while driving.
G (acceleration of gravity) position applied to the vehicle body while driving is shown by a globe (14).
When the vehicle is stopped, historical data of G positions applied to the vehicle body during the driving is shown as a graph (15).

G position history graph at the vehicle stopped can be changed to indicate or hide. For details, refer to “Setting mode of information display” (P.12-8).

⚠ WARNING

Do not look in the display while driving. Doing so may result in an accident.

NOTE:
- *If G position history graph at the vehicle stopped has been set in indication mode, the graph (15) is shown for several seconds when you change the ignition mode to LOCK (OFF) after driving.*
- *The graph is shown approximately and the actual movement may differ.*

Torque and power
Present engine torque and power are shown.

Accelerator and brake
Present accelerator pedal depressing degree and brake line pressure are shown. The display is selectable to indicate or not to indicate. For details, refer to “Setting mode of information display” (P.12-8).

Energy flow (if equipped)
The state of SHVS operation can be checked on the information display. For details, refer to “SHVS (Smart Hybrid Vehicle by Suzuki)” (P.5-18).

Information display	Description
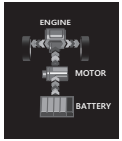 69T040460	When the vehicle is running, ISG (Integrated Starter Generator) assists engine power as an electric motor.
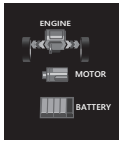 69T040470	When the vehicle is powered by the engine.
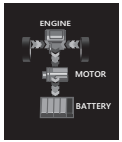 69T040490	When decelerating your vehicle, the ISG generates electricity without engine power.
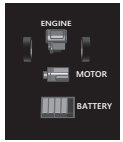 69T040480	When the engine automatically stops by the ENG A-STOP system.

Vehicle speed
Vehicle speed is shown.
You can change the unit of velocity that vehicle speed is displayed in. Refer to “Setting mode of information display” (P.12-8).

NOTE:
Displayed vehicle speed may differ a little from the speed meter indication.

Information shown after driving
When you press the engine switch to change the ignition mode to LOCK (OFF), the following information appears for several seconds on the information display.

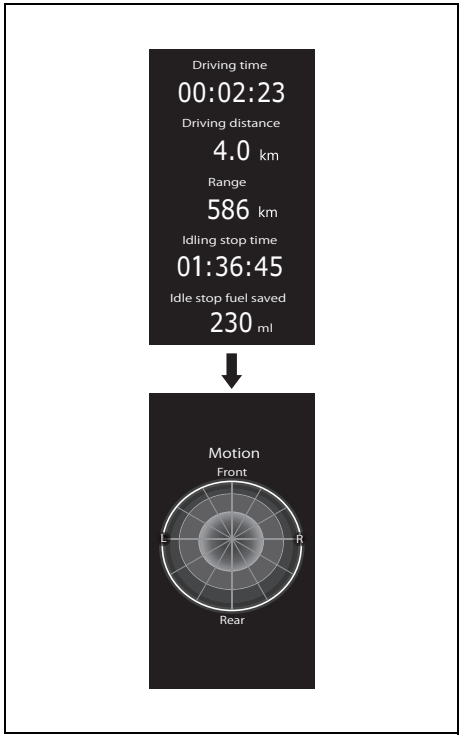

69T040500

Selector position (if equipped) / Gear position (if equipped) / Gearshift indicator (if equipped)

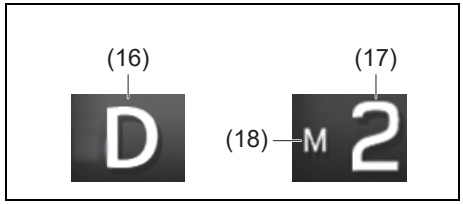

69T040520

(16) Selector position
(17) Gear position
(18) Manual mode indicator

Selector position (for CVT model) / Gear position (for CVT model with manual mode)
The display shows the transmission selector position (16) or the gear position (17).

- For CVT model with manual mode;
  – When the manual mode is not in use, the display shows the selector position.
  – When using the manual mode, the display shows the current gear position.

NOTE:
When the engine switch is pressed to change the ignition mode to ON, or the selector position is changed, the display may not indicate current selector position immediately, but it is not a malfunction.

Manual mode indicator (for CVT model with manual mode)
When you are using the manual mode, the display shows the manual mode indicator (18).

Gearshift indicator (if equipped)
Refer to “Gearshift indicator” (P.5-45).

Trip meter / Odometer

The display (F) shows one of the following indications; trip meter A, trip meter B or odometer.
To switch the display indication (F), push the trip meter selector knob (2).

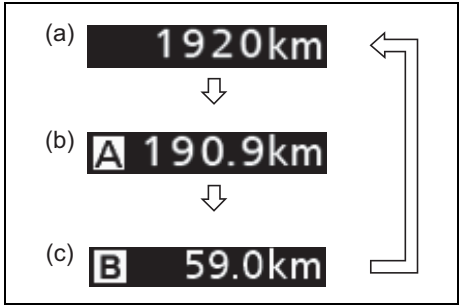

80SM02060

⇧ ⇩	Push the trip meter selector knob (2).

(a) Odometer
(b) Trip meter A
(c) Trip meter B

⚠ WARNING

If you attempt to adjust the display while driving, you could lose control of the vehicle.
Do not attempt to adjust the display while driving.

Trip meter
The trip meter can be used to measure the distance traveled on short trips or between fuel stops.
You can use the trip meter A or trip meter B independently.
To reset the trip meter, push and hold the trip meter selector knob (2) until the display shows 0.0.

NOTE:
The indicated maximum value of the trip meter is 9999.9. When you run past the maximum value, the indicated value will return to 0.0.

Odometer
The odometer records the total distance the vehicle has been driven.

NOTICE

Keep track of your odometer reading and check the maintenance schedule regularly for required services.
Increased wear or damage to certain parts can result from failure to perform required services at the proper mileage intervals.

Rear passenger's seat belt reminder

Refer to "Seat belt reminder" (P.2-23) for details.

Setting mode

For details on how to use the information display, refer to "Setting mode of information display" (P.12-8).

Warning and indicator messages

The display shows warning and indicator messages to let you know about certain vehicle problems.
In some cases, the external or internal buzzer may also sound at the same time to alert you.

If warning and indicator messages appear on the display, follow the messages.

Master warning indicator light

68PM00278

When the display shows warning and indicator messages, the master warning indicator light may also blink.

NOTE:
- *When the problem that causes a message to appear is corrected, the message will disappear.*
- *If a message is displayed, and other problems requiring a message occur, the message for each of the problems will be alternately displayed about every 5 seconds.*
- *When you push and hold the indicator selector knob (3) for about 2 seconds while a message is displayed, the message will disappear temporarily. If the problem that caused the message is not corrected, the message will appear again after 5 seconds.*

Warning and indicator messages

All model

Warning and indicator	Message	Master warning indicator light	Sound	Cause and remedy
69TJ040340	–	Blinks (only while vehicle is in motion)	Beeps at long intervals (from interior buzzer)	A door or tailgate is not properly closed. Stop the vehicle in a safe place and close the door or tailgate properly.*1
69T040090	“RELEASE PARKING BRAKE”	Blinks	Beeps at short intervals (from interior buzzer)	The parking brake has not released. Stop the vehicle in a safe place and release the parking brake.

*1 This message will disappear for a while even if the problem that caused the message to appear is not corrected.

Warning and indicator	Message	Master warning indicator light	Sound	Cause and remedy
69T040100	“LIGHTS ON”	Blinks	Continuous beep (from interior buzzer)	The headlights and/or the position lights are left on. Turn them off.
69T040110	“LOW FUEL”	Off	Chime (from interior buzzer)	Fuel level is low. Refill it as soon as possible.*1

*1 This message will disappear for a while even if the problem that caused the message to appear is not corrected.

Warning and indicator	Message	Master warning indicator light	Sound	Cause and remedy
69T040130	“CHANGE ENGINE OIL”	Off	Off	Change the engine oil and oil filter as soon as possible. The oil life monitoring system must be reset after changing the engine oil and oil filter. Refer to “Oil change request light (if equipped)” (P.4-55).
69T040140	“IGNITION SWITCH POSITION ACC”	Off	Off	This message is displayed when ACC position is selected as the ignition mode.*1
69T040150	“PUSH START SWITCH”	Off	Off	The brake pedal (for CVT vehicle) or the clutch pedal (for manual transmission vehicle) is depressed. Press the engine switch to start the engine.

*1 This message will disappear for a while even if the problem that caused the message to appear is not corrected.

Warning and indicator	Message	Master warning indicator light	Sound	Cause and remedy
69T040160	“SERVICE STEERING LOCK SYSTEM”	Blinks	Chime (from interior buzzer)	There is a problem with the steering lock system. Have your vehicle inspected by an authorized SUZUKI dealer or a qualified workshop.
69T040170	“SERVICE START SYSTEM”	Blinks	Chime (from interior buzzer)	There is a problem with the immobilizer/keyless push start system. Also, the vehicle battery voltage may be decreased. When the message is displayed even if you start the engine with normal voltage of the vehicle battery, have your vehicle inspected by an authorized SUZUKI dealer or a qualified workshop.

Warning and indicator	Message	Master warning indicator light	Sound	Cause and remedy
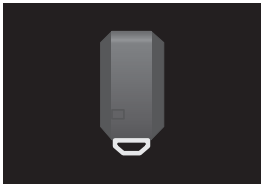 69T040180 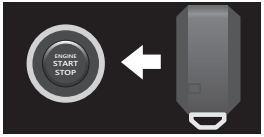 69T040190	“KEY FOB NOT DETECTED” “PLACE KEY FOB ON START SWITCH”	Blinks 	Series of beeps under certain conditions (from exterior and/or interior buzzers)	The remote controller may be outside the vehicle or its battery may be discharged. Bring the remote controller in the vehicle or touch the engine push start switch with the remote controller. If the message still appears, replace the remote controller battery.

Warning and indicator	Message	Master warning indicator light	Sound	Cause and remedy
69T040200	“IGNITION SWITCH POSITION ON”	Off	Off	This message is displayed when ON position is selected as the ignition mode.*1
69T040160	“PRESS START SW WHILE TURNING STRG WHL”	Blinks	Chime (from interior buzzer)	The steering lock is not disengaged. While lightly turning the steering wheel in both directions, press the engine switch again.

*1 This message will disappear for a while even if the problem that caused the message to appear is not corrected.

Warning and indicator	Message	Master warning indicator light	Sound	Cause and remedy
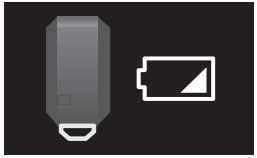 69T040210	“KEY FOB LOW BATTERY”	Off	Chime (from interior buzzer)	The remote controller battery is about to become flat. Replace the battery.*1
Manual transmission vehicle 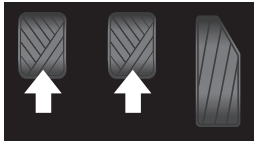 69T040220	“PRESS BRAKE AND CLUTCH TO START”	Off	Off	The engine switch is pressed without depressing the brake and clutch pedals. Try again as instructed by the message.

*1 This message will disappear for a while even if the problem that caused the message to appear is not corrected.

Warning and indicator	Message	Master warning indicator light	Sound	Cause and remedy
CVT vehicle 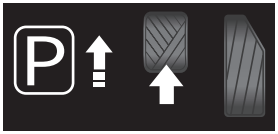 69T040230	“PRESS BRAKE SHIFT TO P TO START”	Off	Short beep (from interior buzzer) / Beeps at short intervals (from interior buzzer) / Continuous beep (from interior buzzer)	• The engine switch is pressed with the gearshift lever in a position other than “P” or “N” or without depressing the brake pedal. Try again as instructed by the message. • Even though the gearshift lever is shifted, the gear is not shifted to the desired selector position. Shift the gearshift lever into “P” with depressing the brake pedal, and then operate the gearshift lever again.
CVT vehicle 69T040240	“GEARSHIFT NOT IN PARK”	Off	Chime (from interior buzzer)	The engine switch is pressed with the gearshift lever in a position other than “P”. Try again as instructed by the message.

Warning and indicator	Message	Master warning indicator light	Sound	Cause and remedy
CVT vehicle 69T040250	“HIGH TRANSMISSION OIL TEMP”	Blinks	Short beep (from interior buzzer)	The CVT fluid temperature becomes too high. Stop the vehicle in a safe place and let the fluid cool down.

Warning and indicator	Message	Master warning indicator light	Sound	Cause and remedy
69T040280	“VEHICLE SWAYING DETECTED”	Off	Short beep (from interior buzzer)	The vehicle swaying warning is activated. Refer to “Vehicle swaying warning” (P.5-81) for details.
62R0316	“DUAL SENSOR BRAKE SUPPORT SYSTEM OFF”	Blinks	Short beep (from interior buzzer)	The Dual Sensor Brake Support II (DSBS II) is turned off.

Warning and indicator	Message	Master warning indicator light	Sound	Cause and remedy
69TJ040610 Hands are illuminated in white	“KEEP CONTROL OF STEERING WHEEL”	Blinks	Beeps at short intervals (from interior buzzer)	The system is detecting that the steering is not held or no steering operation. Hold the steering wheel firmly.
69TJ040700 Hands are illuminated in white	“KEEP CONTROL OF STEERING WHEEL”	Blinks	Off	

Warning and indicator	Message	Master warning indicator light	Sound	Cause and remedy
69T040530 Hands are illuminated in red	“KEEP CONTROL OF STEERING WHEEL”	Blinks	Beeps at short intervals (from interior buzzer)	The system is detecting that the steering is not held or no steering operation. Hold the steering wheel firmly.
69T040530 Hands are illuminated in red	“UNAVAILABLE KEEP CONTROL OF STEERING WHEEL”	Blinks	Continuous beeps (from interior buzzer)	

Warning and indicator	Message	Master warning indicator light	Sound	Cause and remedy
69T040540	“LKA SYSTEM UNAVAILABLE AT CURRENT SPEED”	Off	Beeps at short intervals	The lane keep assist system does not operate because the vehicle speed exceeds the maximum vehicle speed which the lane keep assist system operates.
69T040280	“LDP SYSTEM UNAVAILABLE AT CURRENT SPEED”	Off	Off	The lane departure prevention system does not operate because the vehicle speed exceeds the maximum vehicle speed which the lane departure prevention system operates.

Warning and indicator	Message	Master warning indicator light	Sound	Cause and remedy
69T040300	“ACCELERATOR PEDAL IS PRESSED PRESS BRAKE”	Blinks	Beeps at short intervals (from interior buzzer)	After the automatic brake system is activated, the system is holding the vehicle in a stopped state. (when the accelerator pedal is depressed)
	“ACCELERATOR PEDAL IS PRESSED”			The automatic brake system is activated. (when the accelerator pedal is depressed)

Warning and indicator	Message	Master warning indicator light	Sound	Cause and remedy
Not displayed	“DSBS II SYSTEM STOPPED”	Off	Short beep (from interior buzzer)	The dual sensor is temporarily stopped. Refer to “Temporary stop of the dual sensor” (P.5-69) for details.
Not displayed	“F CAMERA STOPPED (TEMP)”	Blinks		The front camera (DSBS II) functions is temporarily stopped, because the front camera (DSBS II) itself is in low and high temperature. Refer to “Temporary stop of the dual sensor” (P.5-69) for details.
Not displayed	“F CAMERA STOPPED (LOW VIS)”	Off		The front camera (DSBS II) functions is temporarily stopped, because visibility from the front camera (DSBS II) is poor. Refer to “Temporary stop of the dual sensor” (P.5-69) for details.

Warning and indicator	Message	Master warning indicator light	Sound	Cause and remedy
Not displayed	“F RADAR STOPPED (TEMP)”	Blinks	Chime (from interior buzzer)	The front radar (DSBS II) functions is temporarily stopped, because the front radar (DSBS II) itself is in low and high temperature. Refer to “Temporary stop of the dual sensor” (P.5-69) for details.
Not displayed	“CLEAN EXTERNAL RADAR”	Off	Off	The front radar (DSBS II) functions is temporarily stopped, because the surrounding areas of radar is dirty. Refer to “Temporary stop of the dual sensor” (P.5-69) for details.
Not displayed	“F RADAR STOPPED (CALIB)”	Off	Off	The front radar (DSBS II) functions is temporarily stopped, because the recognition angle of radar is bad. Refer to “Temporary stop of the dual sensor” (P.5-69) for details
Not displayed	“DSBS II SYSTEM DISABLED”	Blinks	Chime (from interior buzzer)	There may be a problem with the dual sensor. If this message is still displayed even when you restart the engine, consult a SUZUKI dealer or a qualified workshop.

Warning and indicator	Message	Master warning indicator light	Sound	Cause and remedy
69T040300	“DUAL SENSOR BRAKE SUPPORT”	Blinks	Beeps at short intervals (from interior buzzer)	The frontal collision warning is activated. Refer to “Frontal collision warning” (P.5-72) for details.
				The brake assist system is activated. Refer to “Brake assist system” (P.5-153) for details.
				The automatic brake system is activated. Refer to “Automatic brake system” (P.5-72) for details.
69T040310	“CLEAN PARKING SENSORS”	Off	Off	The rear parking sensor is dirty. Refer to “When the ultrasonic sensor detects any foreign object” (P.5-134) for details.

Warning and indicator	Message	Master warning indicator light	Sound	Cause and remedy
69T040310	“SERVICE PARKING SENSORS”	Blinks	Off	There may be a problem with the ultrasonic sensors. If this message is still displayed even when you start the engine, consult a SUZUKI dealer or a qualified workshop.

Warning and indicator	Message	Master warning indicator light	Sound	Cause and remedy
69T040320	–	Off	Short beeps at long intervals from interior buzzer or Short beeps at short intervals from interior buzzer	The ultrasonic sensors detect objects. Refer to “Parking sensors” (P.5-136) for details.
69T040330	–	Off	Short beeps at very short intervals from interior buzzer	
69T040340	–	Off	Continuous beep from interior buzzer	

Vehicle with ESP® system

Warning and indicator	Message	Master warning indicator light	Sound	Cause and remedy
ESP 69T040260	“SERVICE ESP SYSTEM”	Blinks	Chime (from interior buzzer)	There may be a problem with ESP® system. Have your vehicle inspected by an authorized SUZUKI dealer or a qualified workshop.
ESP 69T040260	“HILL HOLD DISABLE”	Blinks	Chime (from interior buzzer)	There may be a problem with hill hold control system. Have your vehicle inspected by an authorized SUZUKI dealer or a qualified workshop.

Vehicle with Gasoline Particulate Filter (GPF) (if equipped)

Warning and indicator	Message	Master warning indicator light	Sound	Cause and remedy
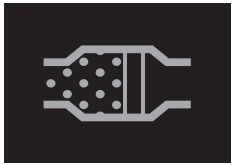 69T040270	“WARNING GPF SYSTEM”	Blinks	Chime (from interior buzzer)	There may be a problem with the gasoline particulate filter. Have your vehicle inspected by an authorized SUZUKI dealer or a qualified workshop.
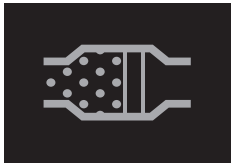 69T040270	“DRIVE TO REGENERATE GPF”	Blinks	Chime (from interior buzzer)	You should regenerate the GPF. Refer to “Gasoline Particulate Filter (GPF) (if equipped)” (P.5-17).

NOTE:

- *If your vehicle is equipped with the ENG A-STOP system, the information display also indicates warning and indicator messages related to the system. For information on these messages, refer to “ENG A-STOP system (engine auto stop start system)” (P.5-20).*
- *If your vehicle is equipped with the Dual Sensor Brake Support II (DSBS II), the information display also indicates warning and indicator messages related to the system. For information on these messages, refer to ““Dual Sensor Brake Support II (DSBS II)” (P.5-71).*
- *If your vehicle is equipped with the adaptive cruise control, the information display also indicates warning and indicator messages related to the system. For information on these messages, refer to “Adaptive cruise control (if equipped)” (P.5-98) or “Adaptive cruise control (with following function for all speeds)” (P.5-110).*
- *If your vehicle is equipped with the lane departure prevention, the information display also indicates warning and indicator messages related to the system. For information on these messages, refer to “Lane departure prevention” (P.5-80).*
- *If your vehicle is equipped with the Blind Spot Monitor (BSM) or Rear Cross Traffic Alert (RCTA), the information display also indicates warning and indicator messages related to the system. For information on these messages, refer to “Blind Spot Monitor (BSM) (if equipped)” (P.5-123) or “Rear Cross Traffic Alert (RCTA) (if equipped)” (P.5-129).*
- *If your vehicle is equipped with a parking sensor system, the information display also indicates warning and indicator messages related to the system. For information on these messages, refer to “Parking sensors” (P.5-136).*

Warning and indicator lights

NOTE:
If warning and indicator lights blink or come on, the corresponding messages may be shown on the information display.

Low tyre pressure warning light (if equipped)

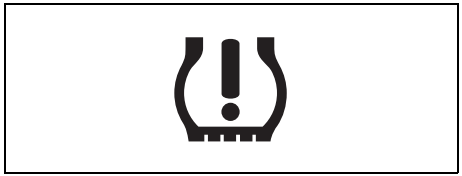

52D305

As an added fuel efficiency feature, your vehicle is equipped with a tyre pressure monitoring system (TPMS) that uses a low tyre pressure warning light to inform you when one or more of your tyres is significantly under-inflated.

When the engine switch is pressed to change the ignition mode to ON, this light comes on briefly so you can check that the light is working.

When the low tyre pressure warning light is lit, one or more of your tyres is significantly under-inflated. You should stop and check your tyres as soon as possible, and inflate them to the proper pressure as indicated on the vehicle's tyre information placard. Driving on a significantly under-inflated tyre causes the tyre to overheat and can lead to tyre failure. Under-inflation also reduces fuel efficiency and tyre tread life, and may affect the vehicle's handling and stopping ability. Each tyre, including the spare, should be checked at least once a month when cold and set to the recommended inflation pressure as specified in the vehicle placard.

The low tyre pressure warning light is also used to inform you of a TPMS malfunction. When the system detects a malfunction, this light will blink for about 75 seconds and then remain continuously illuminated. This sequence will be repeated after the engine switch is pressed to change the ignition mode to ON as long as the malfunction exists.

NOTE:
The low tyre pressure warning light may not come on immediately if you have a sudden loss of air pressure.

⚠ WARNING

Failure to take corrective action when the low tyre pressure warning light is not working or when it comes on and blinks while driving can lead to an accident.
If the low tyre pressure warning light does not come on for 2 seconds after the engine switch is pressed to change the ignition mode to ON, or comes on and blinks while driving, have your vehicle inspected by an authorized SUZUKI dealer or a qualified workshop. Even if the light turns off after blinking, indicating that the monitoring system has recovered, you should still have the system checked by an authorized SUZUKI dealer or a qualified workshop.

⚠ WARNING

The load-carrying capacity of your tyres is reduced at lower inflation pressures. If your tyres are even moderately under-inflated, the load on the tyres may exceed the load-carrying capacity of the tyres, which could lead to tyre failure. The low tyre pressure warning light will not alert you to this condition, because it only comes on when one or more of your tyres becomes significantly under-inflated.
Check and adjust your tyre inflation pressure at least once a month. Refer to "Tyres" (P.9-34).

⚠ WARNING

Continuing to drive with the low tyre pressure warning light on can lead to an accident, resulting in severe injury or death.
If the low tyre pressure warning light comes on and stays on, reduce your speed and avoid abrupt steering and braking. Be aware that driving on a significantly under-inflated tyre can cause the tyre to overheat and can lead to tyre failure, and may affect steering control and brake effectiveness. Stop the vehicle in a safe place as soon as possible and check your tyres.

- **If you have a flat tyre, replace it with the spare tyre (if equipped). Refer to "Jacking instructions" (P.10-22) for the tyre replacement method. Also refer to "Replacing tyres and/or wheels" (P.5-166) for instructions on how to restore normal operation of the TPMS after you have had a flat tyre.**

(Continued)

⚠ WARNING

(Continued)

- **If your vehicle is equipped with a flat tyre repair kit instead of a spare tyre, refer to "Flat tyre repair kit (if equipped)" (P.10-27) for instructions on how to perform an emergency repair of a flat tyre.**
- **If one or more of your tyres is under-inflated, adjust the inflation pressure of all tyres to the recommended inflation pressure as soon as possible.**

Refer to "Tyre Pressure Monitoring System (TPMS) (if equipped)" (P.5-158) for additional details on the tyre pressure monitoring system. Refer to "Tyres" (P.9-34) for information on maintaining proper tyre pressure.

Brake system warning light

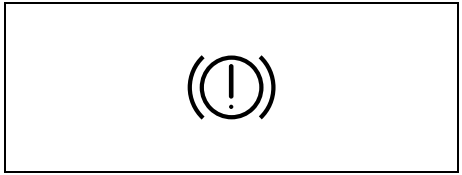

82K170

Three different types of operations exist depending on the vehicle's specification.

- The light comes on briefly when the engine switch is pressed to change the ignition mode to ON.
- The light comes on when the parking brake is engaged with the ignition mode is ON.
- The light comes on under either or both of above two conditions.

The light also comes on when the fluid in the brake fluid reservoir falls below the specified level.

The light should go out after starting the engine and fully releasing the parking brake, if the fluid level in the brake fluid reservoir is adequate.

The light also comes on together with the ABS warning light when the rear brake force control function (proportioning valve function) of the ABS system fails.
If the brake system warning light comes on while you are driving the vehicle, it may mean that there is something wrong with the vehicle's brake system.
If this happens:

1) Pull off the road and stop carefully.

⚠ WARNING

Remember that stopping distance may be longer, you may have to push harder on the pedal, and the pedal may go down farther than normal.

2) Test the brakes by carefully starting and stopping the vehicle on the shoulder of the road.
3) If you determine that it is safe, drive the vehicle cautiously at low speed to the nearest an authorized SUZUKI dealer or a qualified workshop for repairs or tow the vehicle to the nearest an authorized SUZUKI dealer or a qualified workshop for repairs.

⚠ WARNING

If any of the following conditions occur, you should immediately ask an authorized SUZUKI dealer or a qualified workshop to inspect the brake system.

- **If the brake system warning light does not go out after the engine has been started and the parking brake has been fully released.**
- **If the brake system warning light does not come on when the engine switch is pressed to change the ignition mode to ON.**
- **If the brake system warning light comes on at any time during vehicle operation.**

NOTE:
Because the brake system is self-adjusting, the fluid level will drop as the brake pads become worn. Replenishing the brake fluid reservoir is considered normal periodic maintenance.

NOTE:
Parking brake reminder buzzer
A buzzer sounds intermittently to remind you to release the parking brake if you start the vehicle without releasing the parking brake. Check that the parking brake is fully released and the brake system warning light turns off.

Driver’s seat belt reminder light / front passenger’s seat belt reminder light

80J221

When the driver or front passenger does not buckle his or her seat belt, this light will come on and/or blink.
For details of the seat belt reminder, refer to “Seat belt” (P.2-19).

Rear passenger's seat belt reminder light

69T010090

When the rear passenger does not buckle his or her seat belt, this light will come on and/or blink.
For details of the seat belt reminder, refer to “Seat belt reminder” (P.2-23).

Airbag warning light

63J030

When the engine switch is pressed to change the ignition mode to ON, this light blinks or comes on for several seconds so you can check that the light is working.

The light will come on and stay on if there is a problem in the airbag system or the seat belt pretensioner system.

⚠ WARNING

If AIRBAG light does not blink or come on briefly when the engine switch is pressed to change the ignition mode to ON, stays on for more than 10 seconds, or comes on while driving, the airbag system or the seat belt pretensioner system may not work properly, which could result in serious injury in the event of a collision. Have both systems inspected by an authorized SUZUKI dealer or a qualified workshop.

Low fuel warning light

54G343

If this light comes on, refuel the fuel tank as soon as possible.

When this light comes on, a ding sounds once to remind you to refuel.
If you do not refuel, a ding sounds every time when the engine switch is pressed to change the ignition mode to ON.

NOTE:
- *The activation point of this light varies depending on road conditions (for example, slope or curve) and driving conditions because of fuel movement in the tank.*

Anti-lock Brake System (ABS) warning light

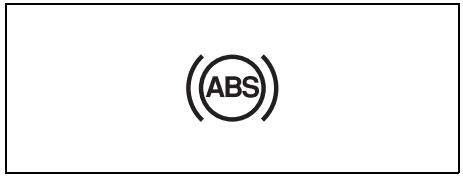

80J127

When the engine switch is pressed to change the ignition mode to ON, this light comes on briefly so you can check that the light is working.
If the light stays on or comes on when driving, there may be something wrong with the ABS.

If this happens:
1) Pull off the road and stop carefully.
2) Change the ignition mode to LOCK (OFF) by pressing the engine switch and then start the engine again.

If the warning light comes on briefly and then turns off, the system is normal. If the warning light still stays on, something is wrong with the system.

If the light and the brake system warning light stay on or come on simultaneously when driving, your ABS system is equipped with the rear brake force control function (proportioning valve function) and there may be something wrong with both the rear brake force control function and the anti-lock function of the ABS system.

If one of the above occurs, have the system inspected by an authorized SUZUKI dealer or a qualified workshop.
If the ABS becomes inoperative, the brake system will function as an ordinary brake system that does not have this ABS system.

For details of ABS system, refer to “Anti-lock Brake System (ABS)” (P.5-153).

Malfunction indicator light

80J222

Your vehicle has a computer-controlled emission control system. A malfunction indicator light is provided on the instrument cluster to indicate when it is necessary to have the emission control system serviced. When the engine switch is pressed to change the ignition mode to ON, this light comes on. When the engine is started, the light goes out.

If the malfunction indicator light comes on or blinks when the engine is running, there is a damage in the emission control system.
Bring the vehicle to an authorized SUZUKI dealer or a qualified workshop to have the damage fixed.

Also, if this light comes on when the engine is running, there is a problem with the continuously variable transmission system or engine cooling system. Ask an authorized SUZUKI dealer or a qualified workshop to have the system inspected.

NOTICE

Continuing to drive the vehicle when the malfunction indicator light is on or blinking can cause permanent damage to the vehicle's emission control system, and can affect fuel economy and driveability.

Electric power steering warning light

80J408

When the engine switch is pressed to change the ignition mode to ON, this light comes on. When the engine is started, the light goes out.

If this light comes on while driving, the power steering system may not work properly. Have the system inspected by an authorized SUZUKI dealer or a qualified workshop.

NOTE:
- *The following steering wheel operations may gradually take more effort while parking or driving at a very low speed. This is not a malfunction of the steering system, but the power steering control system limits the power assist in order to prevent it from overheating.*
  - *The steering wheel is operated very often.*
  - *The steering wheel is kept in a fully turned position for a long while.*

When the power steering control system cools down, the power steering system will return to its original condition.
However, repeating these operations could cause damage to the power steering system.

- *If the power steering system does not work properly, it will require greater effort to steer, but you still will be able to steer.*
- *If the steering is operated, you may hear noise caused by electric power steering operation. This is normal and indicates that the power steering system works properly.*

Engine oil pressure warning light

80J223

When the engine switch is pressed to change the ignition mode to ON, this light comes on. When the engine is started, the light goes out. The light will come on and remain on if there is insufficient oil pressure. If the light comes on when driving, pull off the road as soon as you can and stop the engine.
Check the oil level and add oil if necessary. If there is enough oil, the lubrication system should be inspected by an authorized SUZUKI dealer or a qualified workshop before you drive the vehicle again.

NOTICE

- **If you operate the engine with this light on, severe engine damage can result.**
- **Do not rely on the oil pressure light to indicate the need to add oil. Periodically check the engine oil level.**

Charge warning light

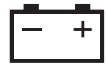

80J226

When the engine switch is pressed to change the ignition mode to ON, this light comes on. When the engine is started, the light goes out. The light will come on and remain on if there is something wrong with the battery charging system. If the light comes on when the engine is running, the charging system should be inspected immediately by an authorized SUZUKI dealer or a qualified workshop.

Transmission warning light

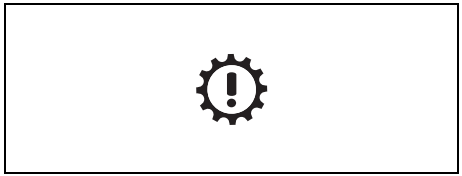

80J219

This light comes on for several seconds when the engine switch is pressed to change the ignition mode to ON so you can check the light is working.

If this light comes on when the ignition mode is ON, there is a problem with the continuously variable transmission system. If this light comes on or blinks, stop the vehicle in a safe place and contact an authorized SUZUKI dealer or a qualified workshop.

If the light comes on or blinks again after the light goes out, have the system inspected by an authorized SUZUKI dealer a qualified workshop.

NOTE:
If the CVT fluid temperature becomes too high, this light will blink. Stop the vehicle in a safe place and let the fluid cool down.

Immobilizer / keyless push start system warning light

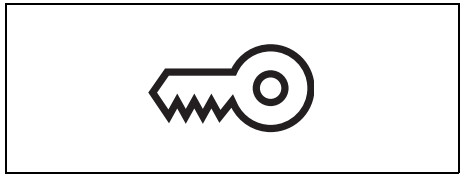

80JM122

When the engine switch is pressed to change the ignition mode to ON, this light comes on briefly so you can check that the light is working.

If this light blinks or stays on, there is a problem with the system.

If this light still blinks or stays on even if you start the engine with normal voltage of the vehicle battery, ask an authorized SUZUKI dealer or a qualified workshop to have the system inspected.

Open door warning light

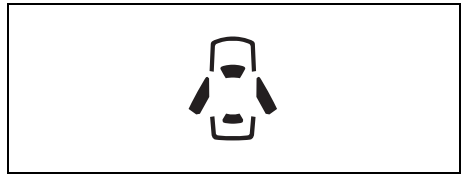

54G391

This light remains on until all doors (including the tailgate) are completely closed.

If any door (including the tailgate) is open when the vehicle is moving, a ding sounds to remind you to close all doors completely.

High beam assist warning light (orange)

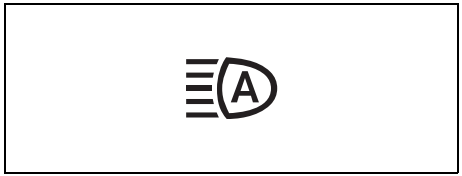

52RM20690

When the engine switch is pressed to change the ignition mode to ON, this light comes on by orange briefly so you can check that the light is working.

For details, refer to “High beam assist” (P.5-92).

In the following situations, this light will come on by orange and the Dual Sensor Brake Support II (DSBS II) will stop functioning when the ignition mode is ON.

When the dual sensor has failure, the function of the dual sensor stops until the engine switch is pressed to change the ignition mode to LOCK (OFF). Find a safe place to park and change the ignition mode to LOCK (OFF) by pressing the engine switch. Restart the engine, and check that the Dual Sensor Brake Support II (DSBS II) indicator light and lane departure prevention indicator light go off.

- If both of the indicators stay on after restarting the engine, there may be a failure of the dual sensor. Ask an authorized SUZUKI dealer or a qualified workshop to have the dual sensor inspected.

Under the following situations, the function of the dual sensor stops temporarily. When the situations are improved, the temporary stop of the function will be canceled.

- When the visibility of the dual sensor is poor.
- When the temperature of the body of dual sensor is high.
- When the systems related to the Dual Sensor Brake Support II (DSBS II) stops temporarily.
- When the battery has a voltage abnormality.

NOTE:
If the function of the dual sensor stops temporarily, high beam assist also stops temporarily.

Drowsy warning light

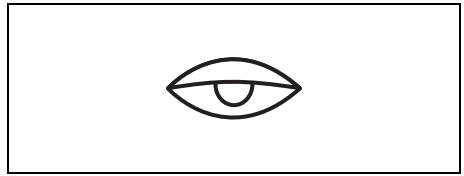

69TJ010110

When the engine switch is pressed to change the ignition mode to ON, this light comes on briefly so you can check that the light is working.

When the driver monitoring system detects a drowsy driving or driver sleepiness, this light comes on. For details, refer to “Driver Monitoring System (DMS) (if equipped)” (P.5-141).

Master warning indicator light

68PM00278

When the engine switch is pressed to change the ignition mode to ON, this light comes on briefly so you can check that the light is working.

When the information display shows warning and indicator messages, this indicator light may also blink.

For details, refer to “Warning and indicator messages” (P.4-16).

Turn signal indicators

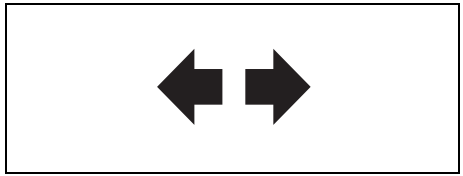

72M00170

When you turn on the left or right turn signals, the corresponding green arrow on the instrument cluster will flash along with the respective turn signal lights. When you turn on the hazard warning switch, both arrows will flash along with all of the turn signal lights.

Main beam (high beam) indicator light

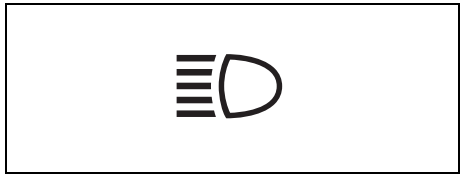

80J212

This indicator comes on when headlight main beams (high beams) are turned on.

Illumination indicator light

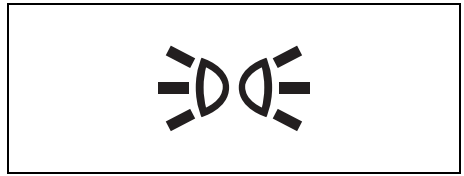

82K096

This indicator light comes on while the position lights, tail light and/or the headlights are on.

Rear fog light indicator light

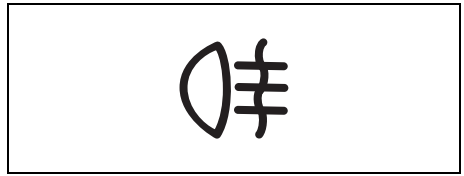

69T010130

The rear fog light indicator light comes on when the rear fog light operates.

S-mode indicator (if equipped)

52RM20600

This light comes on when S-mode switch is ON.

Theft deterrent light

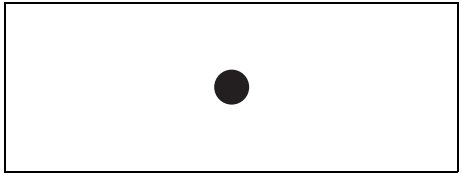

82K269

For details about the theft deterrent alarm system, refer to “Theft deterrent alarm system (if equipped)” (P.3-15).

ESP® indicator light

52KM133

ESP® is a registered trademark of Mercedes-Benz Group AG.

This light blinks 5 times per second when one of the following systems is activated.
- Stability control system
- Traction control system

If this light blinks, drive carefully.

When the engine switch is pressed to change the ignition mode to ON, the light comes on briefly so you can check that the light is working. If the light stays on or comes on when driving, there may be something wrong with the ESP® systems (other than ABS). You should have the system inspected by an authorized SUZUKI dealer or a qualified workshop.

For details of the ESP® systems, refer to “Electronic Stability Program (ESP®)” (P.5-148).

⚠ WARNING

The ESP® systems cannot prevent accidents. Always drive carefully.

ESP® OFF indicator light

57L30045

When the engine switch is pressed to change the ignition mode to ON, this light comes on briefly so you can check that the light is working.

When the ESP® OFF switch is pushed to turn off the ESP® systems (other than ABS), the ESP® OFF indicator light comes on and stays on.

For details of the ESP® systems, refer to “Electronic Stability Program (ESP®)” (P.5-148).

ENG A-STOP indicator light

72M00032

When the engine switch is pressed to change the ignition mode to ON, this light comes on briefly so you can check that the light is working.

When the engine stops automatically, this light comes on.

For details, refer to “ENG A-STOP system (engine auto stop start system)” (P.5-20).

ENG A-STOP OFF light

62R0352

When the engine switch is pressed to change the ignition mode to ON, this light comes on briefly so you can check that the light is working.

When you push the ENG A-STOP OFF switch, this light comes on.

The ENG A-STOP OFF indicator light blinks under the following conditions:

- If there is something wrong with the ENG A-STOP system
- If there is something wrong with the lithium-ion battery
- When the lead-acid battery is due for replacement

If the ENG A-STOP OFF indicator light blinks, have your vehicle inspected immediately by an authorized SUZUKI dealer or a qualified workshop.
For details, refer to “ENG A-STOP OFF light” (P.5-20).

Deceleration energy regenerating indicator light

72M00168

When the engine switch is pressed to change the ignition mode to ON, this light comes on briefly so you can check that the light is working.
When the deceleration energy regenerating function is working, this indicator light will come on.

For details, refer to “ENG A-STOP system (engine auto stop start system)” (P.5-20).

Dual Sensor Brake Support II (DSBS II) OFF indicator light

62R0316

When the engine switch is pressed to change the ignition mode to ON, this light comes on briefly so you can check that the light is working.

- In the following situations, this light will come on and the Dual Sensor Brake Support II (DSBS II) system will stop functioning.
  - When the Dual Sensor Brake Support II (DSBS II) OFF switch is pushed and held to turn off the Dual Sensor Brake Support II (DSBS II) system.
  - When the ESP® OFF switch is pushed to turn off the ESP® systems (other than ABS), the ESP® OFF indicator light will also come on.
- If this light comes on, there is a problem with the Dual Sensor Brake Support II (DSBS II). Bring the vehicle to a SUZUKI dealer or a qualified workshop to have the problem corrected.

For details, refer to “Dual Sensor Brake Support II (DSBS II)” (P.5-71).

Traffic sign recognition OFF indicator light (if equipped)

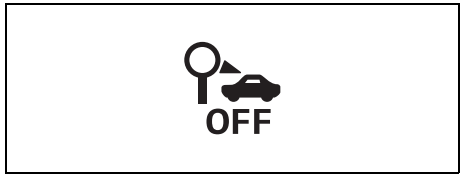

69T010120

When the engine switch is pressed to change the ignition mode to ON, this light comes on briefly to let you know the light is working.

If there is problem in the traffic sign recognition with the engine switch in ON mode, this light will come on.

For some model, if the traffic sign recognition is temporarily stopped and then the engine switch is pressed to change in OFF mode, the light may continue to stay on for a while after turning it back ON, even if the temporarily stopped state has been resolved before turning it ON again.

When the traffic sign recognition is turned off by changing the setting mode of information display, this indicator light comes on and stays on.

You can stop the traffic sign recognition, by changing the setting mode of information display. For details, refer to “Setting mode of information display” (P.12-8).

Traffic sign recognition buzzer OFF indicator light (if equipped)

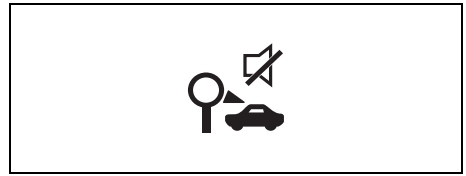

69T010110

For some model, when the setting mode on the information display to turn off the excess speed warning buzzer, this indicator light comes on and go off after a while.

You can stop the traffic sign recognition buzzer, by changing the setting mode of information display. For details, refer to “Setting mode of information display” (P.12-8).

Lane departure prevention indicator light

81M31080

When the engine switch is pressed to change the ignition mode to ON, this light comes on briefly so you can check that the light is working.

The indicator color and coming on/blinking status change depending on the operating status of systems.

For details, refer to “Displays and system operation” of “Lane departure prevention” (P.5-80).

If there is a problem in the lane departure prevention with the engine switch in ON mode, this light will come on by orange. Bring the vehicle to an authorized SUZUKI dealer or a qualified workshop to have the problem corrected.

Lane departure prevention OFF indicator light

62R0317

When the lane departure prevention OFF switch is pushed and held to turn off the lane departure prevention, this light comes on.

For details, refer to “Lane departure prevention” (P.5-80).

Lane keep assist indicator light

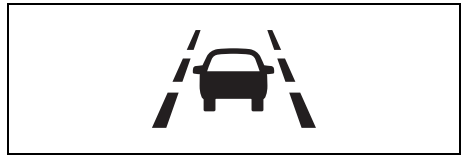

74SB12002

When the engine switch is pressed to change the ignition mode to ON, this light comes on briefly so you can check that the light is working.

The indicator color and coming on/blinking status change depending on the operating status of systems.

For details, refer to “Operation display of steering wheel operation support” of “Lane keep assist” (P.5-87).

If there is a problem in the lane keep assist with the engine switch in ON mode, this light will come on by orange. Bring the vehicle to an authorized SUZUKI dealer or a qualified workshop to have the problem corrected.

Steering assist indicator light

69T010150

When the engine switch is pressed to change the ignition mode to ON, this light comes on at green briefly so you can check that the light is working.

The indicator color and coming on/blinking status change depending on the operating status of systems.

For details, refer to “Displays and system operation” and “Operation display of steering wheel operation support” of “Lane departure prevention” (P.5-80).

High beam assist indicator light (green)

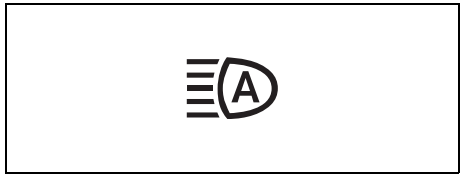

52RM20690

When the high beam assist is working, this light comes on by green.

For details, refer to “High beam assist” (P.5-92).

Adaptive cruise control indicator light

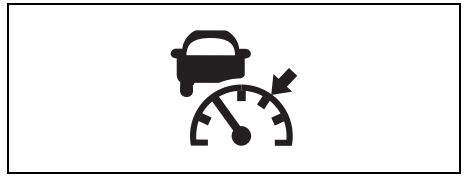

69TJ010190

The indicator color and coming on status change depending on the operating status of systems.

- When the adaptive cruise control is standby condition, this light comes on by white.
- When the adaptive cruise control is activate, this light comes on by green.

If there is a problem in the adaptive cruise control with the engine switch in ON mode, this light will come on.

Parking sensor indicator light

59S010120

When the engine switch is pressed to change the ignition mode to ON, this light comes on briefly so you can check that the light is working.

When the rear parking sensors is activated and then detected obstacles, this light blinks.

If this light comes on, there is a problem with the rear parking sensors. Bring the vehicle to an authorized SUZUKI dealer or a qualified workshop to have the problem corrected.

For details, refer to “Parking sensors” (P.5-136).

Blind Spot Monitor (BSM) OFF indicator light

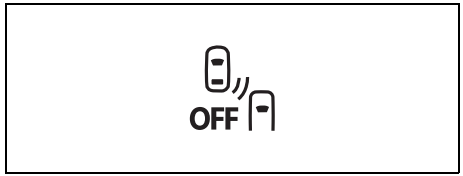

52R10320

When the engine switch is pressed to change the ignition mode to ON, this light comes on briefly so you can check that the light is working.

When the blind spot monitor (BSM) is turned off by changing the setting mode of information display, this indicator light comes on.

- When the BSM is stopped, the blind spot monitor OFF indicator light and rear cross traffic alert OFF indicator light come on.

Rear Cross Traffic Alert (RCTA) OFF indicator light

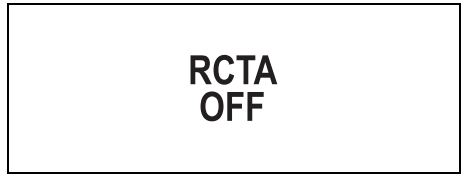

52R10330

When the engine switch is pressed to change the ignition mode to ON, this light comes on briefly so you can check that the light is working.

When the rear cross traffic alert (RCTA)) is turned off by changing the setting mode of information display, this indicator light comes on.

Driver Monitoring System OFF indicator light

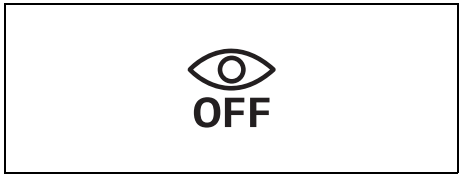

69TJ010170

When the engine switch is pressed to change the ignition mode to ON, this light comes on briefly so you can check that the light is working.

When the driver monitoring system is turned off by changing the setting mode of information display, this indicator light comes on.

When the driver monitoring system is temporarily stopped, this light comes on.

When the driver monitoring system is malfunction, this light blinks. Bring the vehicle to an authorized SUZUKI dealer or a qualified workshop to have the problem corrected.

Oil change request light (if equipped)

79JM007

Your vehicle has the oil life monitoring system and related oil change request light that alerts you to change the engine oil and oil filter.

When this light comes on, change engine oil and oil filter immediately.
For details on how to change the engine oil and oil filter, refer to “Changing engine oil and oil filter” (P.9-24).

This light comes on for several seconds when the engine switch is pressed to change the ignition mode to ON so you can check that light is working.

If either of odometer reading or time is reached to the value which is set by the system, this light comes on when the engine switch is in “ON” position. In addition, the message is shown on the information display to tell you it is necessary to change the engine oil and oil filter. When the engine oil and oil filter are changed and the oil life monitoring system is reset, this light will go out. For details of the maintenance schedule, refer to “Periodic maintenance schedule” (P.9-3).

Whenever the engine oil and oil filter are changed, the light must be reset to monitor the next oil change timing properly. The light will go out after the reset. For the resetting procedure, refer to “Setting mode of information display” (P.12-8).

NOTICE

Severe engine damage will result, if you keep operating the engine after this light comes on.
Change the engine oil and oil filter immediately when the light blinks.

NOTE:
- *This light is used to facilitate the oil and oil filter change according to the maintenance schedule.*
- *Even though the oil is replaced before this light comes on, reset of the oil life monitoring system is necessary. Consult an authorized SUZUKI dealer or a qualified workshop about the reset method. If you reset it by yourself, refer to “Setting mode of information display” (P.12-8).*
- *Consult an authorized SUZUKI dealer or a qualified workshop for changing the setting of oil life monitoring system in one of the following cases;*
  - *For European countries and Israel, if you replace ACEA Standards or SUZUKI genuine engine oil by the*

engine oil other than ACEA Standards or SUZUKI genuine engine oil, or vice versa

– *By the change of your driving condition, if you need to apply the schedule of "Maintenance recommended under severe driving conditions" instead of "Periodic maintenance schedule" in the "INSPECTION AND MAINTENANCE" section, or vice versa*

Gasoline Particulate Filter (GPF) warning light (if equipped)

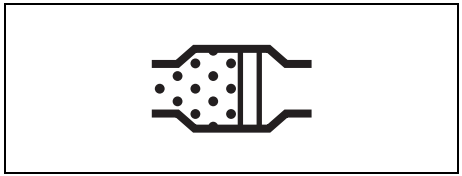

64J244

For details about the gasoline particulate filter, refer to "Gasoline Particulate Filter (GPF) (if equipped)" (P.5-17).

"R" (reverse gear) indicator light (if equipped)

69TJ040750

When the gearshift lever is in "R" (Reverse), this light comes on.

If the light does not come on when the gearshift lever is in "R" (Reverse), bring the vehicle to an authorized SUZUKI dealer or a qualified workshop to have the problem corrected.

MEMO

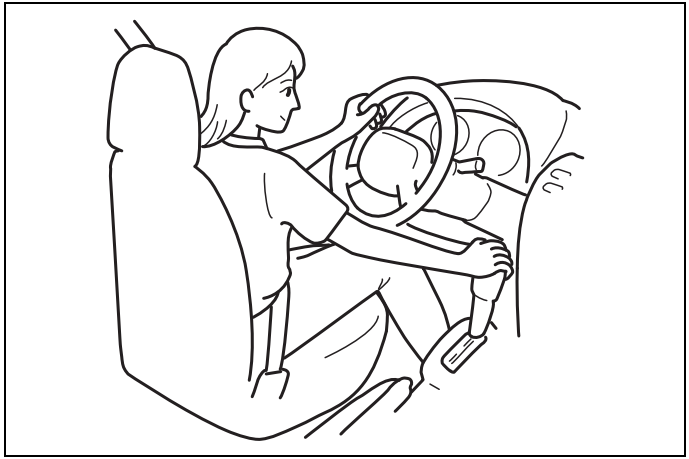

59RN05760

Daily inspection checklist 5-1
Engine oil consumption 5-5
Engine switch 5-5
Immobilizer system 5-7
Pedal 5-8
Keyless push start system 5-9
Starting engine 5-13
Stopping engine 5-15

OPERATING YOUR VEHICLE

Gasoline Particulate Filter (GPF) (if equipped) 5-17
SHVS (Smart Hybrid Vehicle by Suzuki) 5-18
ENG A-STOP system (engine auto stop start system) 5-20
Air conditioning system settings by ENG A-STOP system 5-34
Parking brake lever 5-34
Precaution for parking 5-35
Using transmission 5-38
Gearshift indicator 5-45
When driving the vehicle with Continuously Variable Transmission (CVT) 5-48
Characteristics of the vehicle with Continuously Variable Transmission (CVT) 5-49
How to drive the vehicle with Continuously Variable Transmission (CVT) 5-50
Speed limiter (if equipped) 5-55
SUZUKI SAFETY SUPPORT 5-59
Rearview camera (if equipped) 5-145
Electronic Stability Program (ESP®) 5-148
Braking 5-152
Anti-lock Brake System (ABS) 5-153
Tyre Pressure Monitoring System (TPMS) (if equipped) 5-158

Daily inspection checklist

Before driving

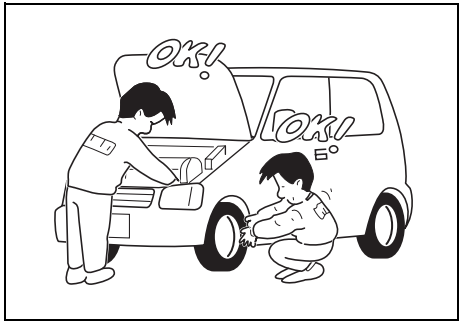

59RN05750

1) Check that the windows, mirrors, lights and reflectors are clean and unobstructed.
2) Visually check the tyres for the following points:
   – the depth of the tread groove
   – abnormal wear, cracks and damage
   – loose wheel nuts
   – existence of foreign material such as nails, stones, etc.

   Refer to “Tyres” (P.9-34) for details.
3) Look for fluid and oil leakage.

NOTE:
It is normal for water to drip from the air conditioning system while and after use.

4) Check that the hood is fully closed and latched.
5) Check the headlights, turn signal lights, brake lights and horn for proper operation.
6) Adjust the seat and head restraint.
7) Check the brake pedal feeling and the adjustment condition for the parking brake lever or pedal.
   Refer to “Brakes” (P.9-30) for details.
8) Adjust the mirrors.
9) Check that you and all the passengers have properly fastened the seat belts.
10) Check that all the warning lights come on as the engine switch is pressed to change the ignition mode to ON.
11) Check all the gauges.
12) Check that the brake system warning light turns off when the parking brake is released.

Once a week, or each time you fill your fuel tank, perform the following under-hood checks:

1) Engine oil level
2) Coolant level
3) Brake fluid level
4) Battery fluid (acid) level
5) Windshield washer fluid level
6) Hood latch operation
   Pull the hood release handle inside the vehicle. Check that you cannot open the hood further without releasing the secondary latch. Close the hood securely after checking for proper latch operation. See the item “All latches, hinges and locks” of “CHASSIS AND BODY” in the “Maintenance schedule” (P.9-2) for lubrication schedule.

⚠ WARNING

Check that the hood is fully closed and latched before driving. If it is not, it can fly up unexpectedly during driving, obstructing your view and resulting in an accident.

Once a month, or each time you fill your fuel tank, check the tyre pressure using a tyre pressure gauge.

When you notice the following symptoms

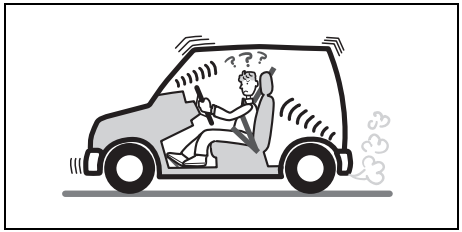

80J009

⚠ CAUTION

If you keep using your vehicle in the following conditions, malfunction and an accident may occur. Consult an authorized SUZUKI dealer or a qualified workshop.

- **Leaked oil or other liquid appears on the ground below the vehicle.**
- **Brake fluid level is low.**
- **There are unusual odors, sounds or vibrations.**
- **The feeling of operating the steering wheel or the brakes is different than usual.**

Check the tyre pressure

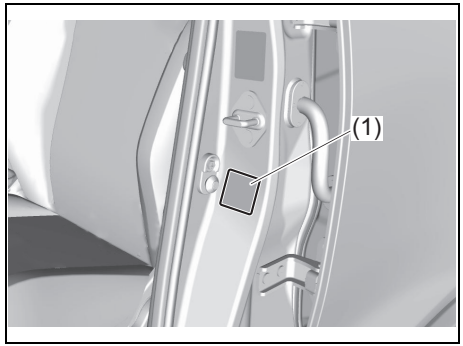

69T090100

- Periodically check and adjust the tyre pressure. The specified tyre pressure for the tyres of this vehicle can be confirmed by checking the tyre information label (1) affixed to the opening of the driver's door.
- Driving with insufficient tyre pressure can cause the sides of the tyre to wear, in addition to decreasing fuel efficiency.

⚠ WARNING

- **Driving with extremely low tyre pressure can cause a tyre blowout (bursting) and may result in an accident. Do not drive with extremely low tyre pressure.**

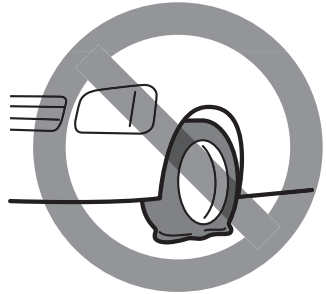

69RHS173

- **If the specified tyre pressure is not maintained, the full performance of the vehicle cannot be achieved and the following could occur, leading to accidents or malfunctions. Adjust the tyre pressure as specified.**
  - **Decreased driving stability**
  - **Longer distance required for braking**

(Continued)

⚠ WARNING

(Continued)
- **Accurate tyre rotation speed cannot be detected, which interferes with the following functions:**
  - **Anti-lock Brake System (ABS)**
  - **Emergency Stop Signal (ESS)**
  - **Electronic Stability Program (ESP®)**
  - **Some functions of Dual Sensor Brake Support II (DSBS II)**
  For details, refer to "If accurate tyre rotation speed cannot be detected" (P.5-60).

Check the battery

This vehicle is equipped with the following batteries.
- Lead-acid battery
  This is used to supply power to the vehicle.
- Lithium-ion battery
  This is used to supply electrical power to the vehicle's electrical components.

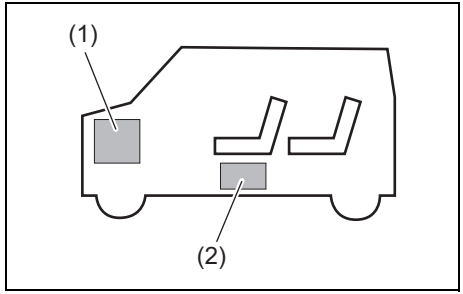

59RN05730

(1) Lead-acid battery
(2) Lithium-ion battery

Carefully read the instructions in the following sections, "Lead-acid battery" and "Lithium-ion battery", for the correct handling of each battery.
- The lead-acid battery and the lithium-ion battery discharge gradually. In order to avoid a flat battery, drive the vehicle once a month for at least 30 minutes to recharge the battery.

Lead-acid battery

Check the fluid level of lead-acid battery

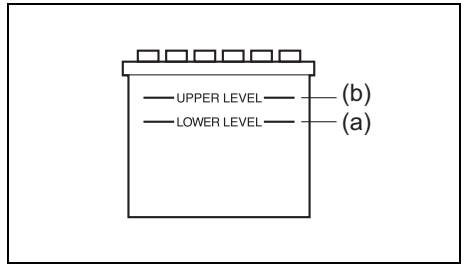

69T051240

If the electrolyte fluid level is below the lower limit (a), replenish it to the upper limit (b). A lack of electrolyte fluid can shorten the battery's life.

⚠ WARNING

- **A lack of the electrolyte fluid could cause the danger of battery explosion due to overheating. Do not use the battery or do not charge the battery, with the fluid level below the lower limit.**
- **Loose connection of the battery terminals could cause fire or malfunction. When detaching the battery terminals and connecting them again, ensure a tight connection.**

NOTICE

Since this vehicle uses a lead-acid battery specifically for the high-efficiency idling stop system, observe the following precautions. Failure to observe these precautions may result in a malfunction of the system or a shortened battery life.

- **When replacing the battery, only use the specified type. (Do not use any other type of battery.)**
- **Do not connect electrical accessories to the terminals.**

Lithium-ion battery

This battery is installed only in model equipped with the HYBRID and is located under the front passenger's seat (under the underseat container).

- The lithium-ion battery is maintenance-free. However, in order to avoid a flat battery, drive the vehicle once a month for at least 30 minutes to recharge the battery.
- When replacing or disposing of the lithium-ion battery, consult an authorized SUZUKI dealer or a qualified workshop.

⚠ WARNING

Since mishandling the lithium-ion battery may cause a fire or electric shock or damage to the battery, observe the following precautions.

- **Do not remove or disassemble it.**
- **Do not allow it to get wet, for example, with water.**
- **Do not expose it to a strong impact.**
- **Do not lean or place any object on it.**
- **Do not disconnect the cable at the battery or connect electrical accessories to the terminals.**

Check the exhaust pipe

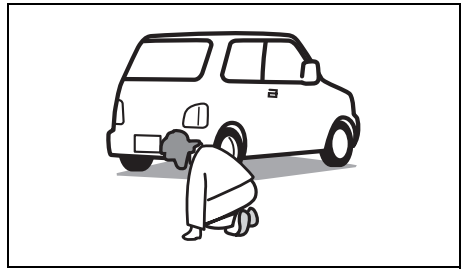

80J011

Periodically check the exhaust pipes for holes or cracks.

⚠ WARNING

If leaks in exhaust pipes are present, exhaust gas could enter the vehicle and possibly cause carbon monoxide poisoning. If you feel that something is abnormal, consult an authorized SUZUKI dealer or a qualified workshop.

Engine oil consumption

It is normal for the engine to consume some engine oil during normal vehicle operation.

The amount of engine oil consumption depends on viscosity and quality of the oil and your driving conditions.
More oil is consumed during high-speed driving and when there is frequent acceleration and deceleration. Under high loads, your engine also will consume more oil.
A new engine also consumes more oil, since its pistons, piston rings and cylinder walls have not yet become conditioned. New engines reach the normal level of oil consumption only after approximately 5000 km (3000 miles) driving.

Oil consumption:
Max. 1.0 L per 1000 km
(1 Qt. per 621 miles)

When judging the amount of oil consumption, note that the oil may become diluted and it is difficult to judge the accurate oil level.
As an example, if a vehicle is used for repeated short trips, and consumes a normal amount of oil, the dipstick may not show any drop in the oil level at all, even after 1000 km (621 miles) or more of driving. This is because the oil gradually becomes diluted with fuel or moisture, making it appear that the oil level has not changed.
You should also be aware that the diluting ingredients evaporate out when the vehicle is subsequently driven at high speeds, such as on an expressway, making it appear that oil is excessively consumed after high-speed driving.

Engine switch

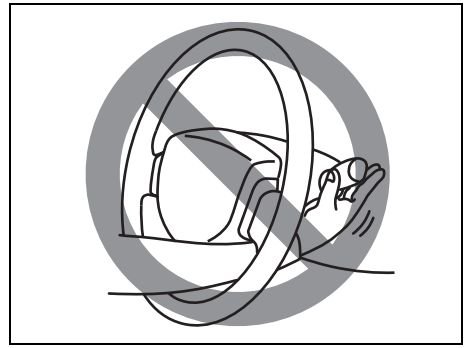

52SS30040

⚠ WARNING

To avoid possible injury, do not operate controls by reaching through the steering wheel.

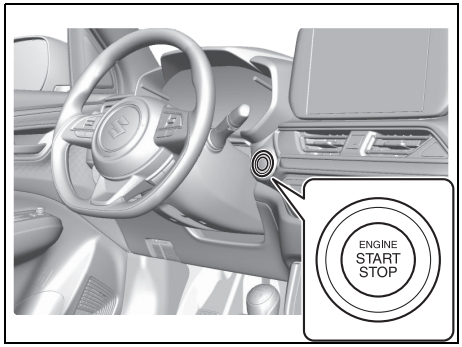

69T050160

LOCK (OFF)
This mode is for parking the vehicle. When this mode is selected by pressing the engine switch and then any door (including the tailgate) is opened or closed, the steering will be locked automatically.

ACC
Press the engine switch to select this ignition mode to use such electric equipment as the audio system, outside rearview mirrors and accessory socket with the engine off. When this position is selected, the information display in the instrument cluster shows the following message: “ACC” IGNITION SWITCH POSITION. Refer to “Warning and indicator messages” (P.4-16) for details.

ON
- **With the engine off**
  You can use such electric equipment as the power windows and wipers with the engine off. When this ignition mode is selected by pressing the engine switch, the information display in the instrument cluster shows the following message: “ON” IGNITION SWITCH POSITION. Refer to “Warning and indicator messages” (P.4-16) for details.
- **With the engine on**
  All electric equipment is operational. The vehicle can be driven when you have selected this ignition mode by pressing the engine switch.

START
- **Manual transmission vehicle:**

Provided you have the keyless push start system remote controller with you, the engine automatically starts when you press the engine switch to select this ignition mode after shifting to “N” (Neutral) and depressing the brake and clutch pedals.

- **CVT vehicle:**

Provided you have the keyless push start system remote controller with you, the engine automatically starts when you press the engine switch to select this ignition mode after placing the gearshift lever in “P” (Park) position and depressing the brake pedal. (If you need to restart the engine while the vehicle is moving, shift into “N”.)

NOTICE

Do not leave the engine switch in ACC or ON mode when the engine is not running. Avoid using the radio or other electric accessories for a long time when the engine switch is in ACC or ON mode when the engine is not running, otherwise the lead-acid battery may discharge.

NOTE:
- *You do not need to keep the engine switch pressed until the engine starts.*
- *In the presence of strong radio wave or noise, you may not be able to change the ignition mode to ACC or ON or to start the engine using the engine switch. In this case, the information display in the instrument cluster will show the following message: “KEY FOB NOT DETECTED”.*

Unreleased steering lock warning

If the steering lock remains engaged when you press the engine switch to change the ignition mode to ON, the information display in the instrument cluster shows the message: “PRESS START SW WHILE TURNING STRG WHL”. Refer to “Warning and indicator messages” (P.4-16) for details.

NOTE:
The steering lock may not be released and the immobilizer/ keyless push start system warning light turns on if some load is applied on the steering wheel. If this happens, turn the steering wheel system to the right or left to relieve it from the load before you press the engine switch again to change to the desired ignition mode.

Immobilizer system

This system is designed to help prevent vehicle theft by electronically disabling the engine starting system.
The engine can be started only with your vehicle’s original keyless push start system remote controller, which has an electronic identification code programmed in it. The remote controller communicates the identification code to the vehicle when the engine switch is pressed to change the ignition mode to ON. If you need to make spare remote controllers, see an authorized SUZUKI dealer or a qualified workshop. The vehicle must be programmed with the correct identification code for the spare remote controllers.

In the case you can start the engine, when you press the engine switch to change the ignition mode to ON, the immobilizer system will be released and the immobilizer/ keyless push start system warning light will turn on for about 2 seconds and then it will turn off.

When you press the engine switch to change the ignition mode to LOCK (OFF), the immobilizer system will operate.

NOTICE
If the immobilizer system is modified or removed, it cannot be properly operated. Do not modify or remove the immobilizer system.

NOTE:
This immobilizer system is maintenance-free.

Immobilizer / keyless push start system warning light

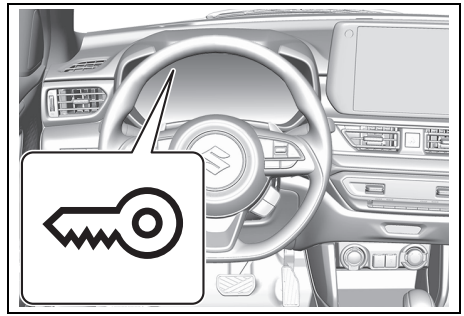

69T050170

This light will be shown on the instrument cluster.

- If there is abnormality on the immobilizer system or the keyless push start system, this light will turn on with the engine switch in ON mode.

- If this light blinks or turns on for about 5 seconds, you may not be able to start the engine. Check the position of the keyless push start system remote controller, change the ignition mode to LOCK (OFF), and then change it back to ON. Also, refer to “Master warning indicator light blinks and engine cannot be started” (P.5-14).
- This light will blink when the remote controller outside warning operates as well. Refer to “Remote controller outside warning” (P.5-12).

NOTICE

The remote controller is sensitive electronic instrument. To avoid damaging it:
- **Do not expose it to impacts, moisture or high temperature such as on the dashboard under direct sunlight.**
- **Keep it away from magnetic objects.**

NOTE:
- *If this light turns on or blinks, the information display in the instrument cluster will show the following message.*

69T040170

“SERVICE
START SYSTEM”

- *If you lose your remote controller, ask an authorized SUZUKI dealer or a qualified workshop as soon as possible to deactivate the lost one, and to make a new or remote controller.*
- *If you own other vehicles with immobilizer keys, keep those keys away from the engine switch when using your SUZUKI vehicle. Otherwise, the engine may not be started because they may interfere with your SUZUKI vehicle’s immobilizer system.*
- *If you attach any metal objects to the remote controller, it may not start the engine.*

Pedal

Manual transmission

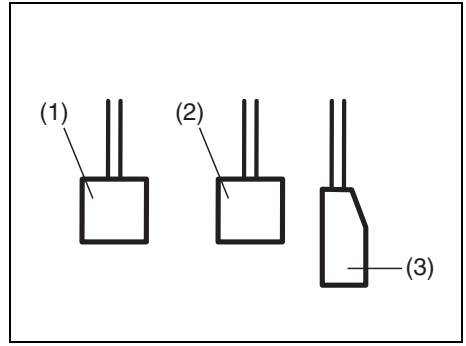

80J2121

CVT

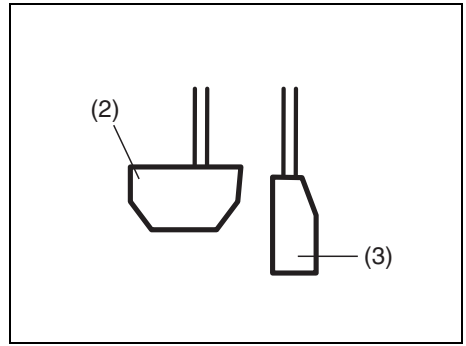

80J2122

Clutch pedal (1)

A clutch pedal is used to disengage the driving force to the wheels when starting the engine, stopping, or shifting the gear-shift lever. Depressing the pedal disengages the clutch.

⚠ WARNING

Do not drive with your foot resting on the clutch pedal. It could result in excessive clutch wear, clutch damage, or unexpected loss of engine braking.

Brake pedal (2)

Your vehicle is equipped with front disc brakes and rear drum brakes. Depressing a brake pedal applies both sets of brakes.

You may hear occasional brake squeal when you apply the brakes. This is a normal condition caused by environmental factors such as temperature, humidity or dust, etc.

⚠ WARNING

- **If brake squeal is excessive and occurs each time the brakes are applied, you should have the brakes checked by an authorized SUZUKI dealer or a qualified workshop.**

(Continued)

⚠ WARNING

(Continued)

- **Do not apply brakes continuously or rest your foot on the brake pedal. This will result in overheating of the brakes which could cause unpredictable braking action, longer stopping distances, or permanent brake damage.**

Accelerator pedal (3)

An accelerator pedal controls the speed of the engine. Depressing the accelerator pedal increases power output and speed.

NOTE:
Your vehicle is equipped with Brake Override System. If you depress both the accelerator pedal and the brake pedal simultaneously, the engine power output may be suppressed.

Keyless push start system

Provided the keyless push start system remote controller is within the interior workable area, you can use the engine switch for starting the engine and selecting an ignition mode (ACC or ON). In addition, the following functions can be used:

- Keyless entry function. Refer to “Keyless push start system remote controller” (P.3-10) for details.
- Locking and unlocking doors (including the tailgate) using a request switch. Refer to “Keyless push start system remote controller” (P.3-10) for details.
- Immobilizer (anti-theft) function. Refer to “Immobilizer system” (P.5-7) for details.

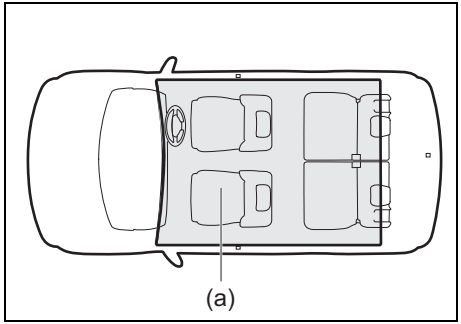

69T030330

(a) Interior workable area

The interior workable area is defined as all the interior spaces except for the space on

the instrument panel or in the luggage compartment.

NOTE:

- *Even when the remote controller is in the interior workable area, if it is in any of the following conditions, you may not be able to start the engine or select the ignition modes, and the remote controller outside warning may be given.*
  - *The remote controller's battery is low.*
  - *The remote controller is affected by strong radio wave or noise.*
  - *The remote controller is in contact with or covered by a metallic object.*
  - *The remote controller is in the secluded stowages such as the glove box or a door pocket.*
  - *The remote controller is in the sun visor pocket or on the floor.*
- *Even when the remote controller is outside the interior workable area, if it is in any of the following conditions, you may be able to start the engine or select the ignition mode. The remote controller outside warning may not be given at that time.*
  - *The remote controller is outside the vehicle but very close to a door.*
  - *The remote controller is on the instrument panel.*

Engine switch illumination

The engine switch is illuminated (lit) in the following situations:

- When the engine is off and the driver's door is open, or for 15 seconds after the driver's door is closed. The illumination will fade out after 15 seconds passed.
- When the engine is off and the position lights are on. The illumination will go out when the position lights are turned off.
- When the engine is on and the position lights and/or the headlights are on. The illumination will go out when the position lights and the headlights are turned off.

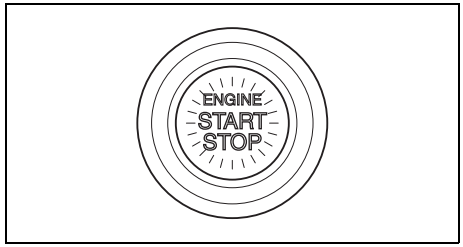

82K253

NOTE:
To save the lead-acid battery, the illumination will be automatically turned off when both of the following conditions are simultaneously met:

- *The headlights and position lights are turned off.*
- *15 minutes has elapsed since opening the driver's door.*

Selection of ignition modes

Press the engine switch to select ACC or ON mode as follows when you use an electric accessory or check the operation of instruments without running the engine.

1) Bring the keyless push start system remote controller with you and sit in the driver's seat.
2) Manual transmission – Without depressing the clutch pedal, press the engine switch (1).

   CVT – Without depressing the brake pedal, press the engine switch (1).

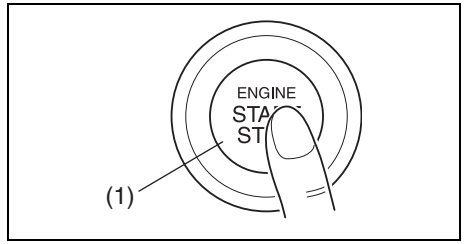

82K254

3) Without depressing the brake pedal, press the engine switch (1).

Every time you press the engine switch, the ignition mode changes as follows.

Manual transmission

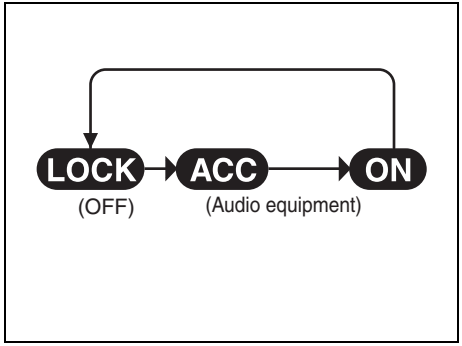

68PH00322

CVT

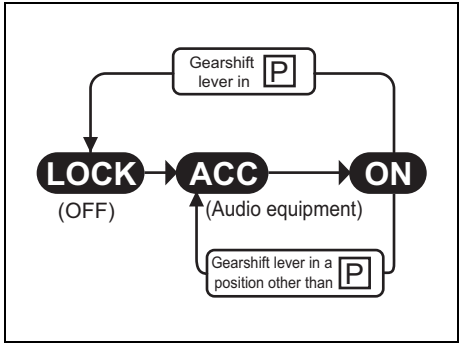

57L31006

NOTE:

- *CVT – If the gearshift lever is in any position other than "P", or if the knob button is pushed when the gearshift lever is in "P" position the ignition mode cannot be returned to LOCK (OFF).*
- *When selecting the ignition modes, the information display in the instrument cluster shows certain messages. Refer to "Warning and indicator messages" (P.4-16) for details.*

If the master warning indicator light blinks and the ignition modes cannot be selected

Your keyless push start system remote controller may not be sensed as being within the interior workable area (refer to the related explanation in this section). Try again after checking that you have the remote controller with you. If the ignition modes still cannot be selected, the battery of the remote controller may be discharged. To select an ignition mode, you must then use the following method:

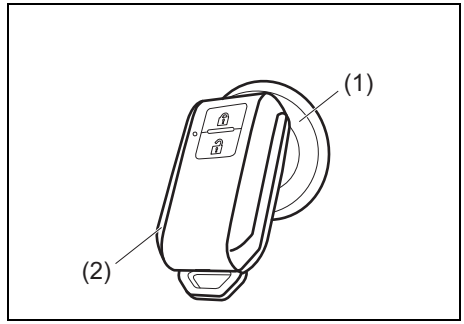

63R40050

1) Without depressing the brake pedal and the clutch pedal, push the engine switch (1).
2) The master warning indicator light in the instrument cluster blinks and the message "PLACE KEY FOB ON START SWITCH" appears in the information display within about 10 seconds. Touch the engine switch with LOCK button side of remote controller (2) for about 2 seconds.

NOTE:
- *If you still cannot select the ignition modes, there may be some problem with the keyless push start system. Contact an authorized SUZUKI dealer or a qualified workshop for an inspection of the system.*
- *The immobilizer/keyless push start system warning light will come on for about 5 seconds while the master warning indicator light is blinking. In addition, the information display in the instrument cluster will show a message during this time. Refer to "Warning and indicator messages" (P.4-16) for details.*
- *You may customize the system to cause the interior buzzer to sound once for warning that remote controller is out of sensing range. To incorporate this customization, please contact an authorized SUZUKI dealer or a qualified workshop.*
- *If the battery of the remote controller is becoming discharged, the corresponding message will appear in the information display when you press the engine switch to change the ignition mode to ON. Refer to "Warning and indicator messages" (P.4-16) for details. For details on replacing the battery, refer to "Keyless push start system remote controller" (P.3-10).*

Remote controller outside warning

When either of the conditions described below is met, the system causes the remote controller outside warning by sounding the interior and exterior buzzers. At the same time, the immobilizer/keyless push start system warning light comes on and the master warning indicator light blinks.

- Any door is opened and then closed while the remote controller is not inside the vehicle and the engine is running or the ignition mode has been changed to ACC or ON by pressing the engine switch.
- The remote controller is not inside the vehicle when you attempt to start the engine after changing the ignition mode to ACC or ON by pressing the engine switch.

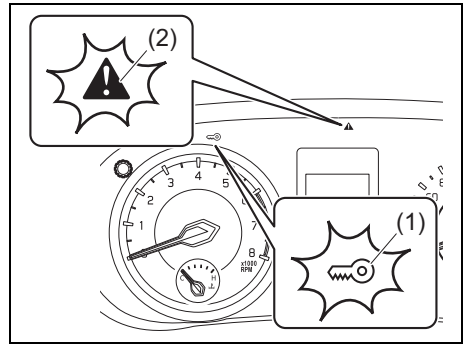

69T050180

(1) Immobilizer/keyless push start system warning light (blinks)
(2) Master warning indicator light (blinks)

NOTE:
- *If the warning is given, relocate the remote controller as soon as possible.*
- *Any attempt to start the engine will fail while the warning is active. The message appearing in the information display in the instrument cluster will also indicate this condition. Refer to "Warning and indicator messages" (P.4-16) for details.*

- *Normally, the immobilizer/keyless push start system warning light should go out and the master warning indicator light should stop blinking shortly after the remote controller is brought back inside the vehicle. If they remain lit and blinking, change the ignition mode to LOCK (OFF) by pressing the engine switch and then perform the engine starting operation. Refer to “Starting engine” (P.5-13).*
- *Always keep the remote controller with you as the driver.*

Starting engine

Starting engine

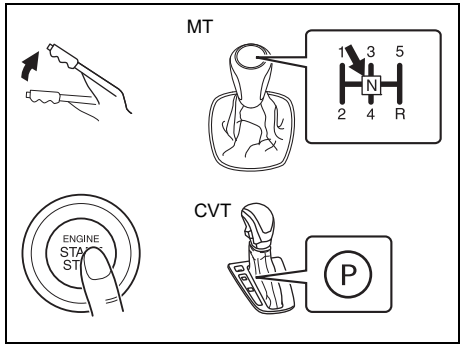

55T050040

1) Check that the parking brake is set fully.
2) Turn off such loads as the headlights and air conditioning system to facilitate starting of the engine.
3) Manual transmission vehicle:
   Shift into “N” (Neutral). Hold the clutch pedal and brake pedal fully depressed.
   CVT vehicle:
   If the gearshift lever is not in “P” (Park) position, shift into “P” (Park). Hold the brake pedal fully depressed.
4) The “PUSH START SWITCH” message will appear in the information display in the instrument cluster.

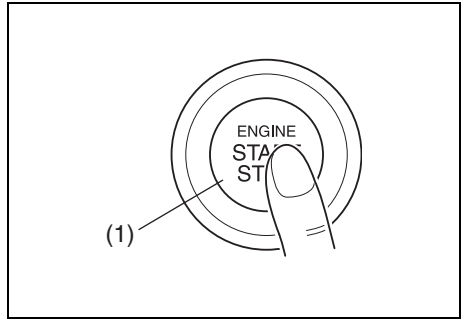

82K254

5) With your foot taken off the accelerator pedal, push the engine switch (1). When the engine is started, the starter motor will automatically stop.
   - Even if you fail to start the engine, the starter motor will stop turning automatically after approximately 12 seconds. In this case, press the engine switch to select LOCK (OFF) mode and restart the engine.
   - If there is a problem with the system, the engine will not start automatically even if the switch is pressed. In case the starter motor does not turn or stops immediately, start the engine by the following procedure.
     a. Press the engine switch to select the ON mode.

b. Perform the above procedure 1) to 3).
c. Keep the engine switch pressed until the engine starts. Release your finger from the engine switch after the engine has started.

NOTICE

- **If the engine does not start, press the engine switch to select LOCK (OFF) mode and wait for more than 30 seconds before trying again, for protection of a lead-acid battery and a starter motor. If the engine does not start after several attempts, consult an authorized SUZUKI dealer or a qualified workshop.**
- **Do not try to start the engine by pushing or towing the vehicle, or coasting down a hill. This starting method could result in damage to the catalytic converter or damage to other parts.**

NOTE:
- *You do not need to keep the engine switch pressed to start the engine.*
- *Manual transmission vehicle:*
  The engine of a manual transmission vehicle will not start unless the clutch pedal is depressed.
- *CVT vehicle:*
  CVT vehicle have a starter interlock device. The engine starts when the gearshift lever is in either "P" or "N" position.
- *During the engine starting procedure, messages on the information display will help you. Refer to "Warning and indicator messages" (P.4-16) for details.*

Master warning indicator light blinks and engine cannot be started

Your keyless push start system remote controller may not be sensed as being within the interior workable area. Try again after checking that you have the remote controller with you. If the engine still cannot be started, the battery of the remote controller may be discharged. To start the engine, use the following method:

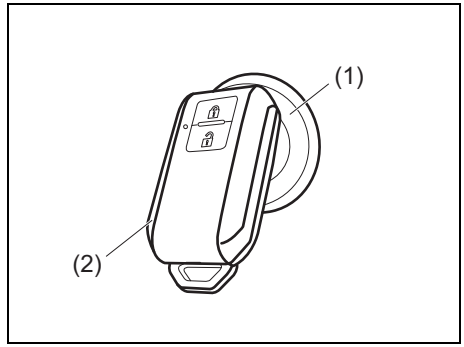

52RM30020

1) Check that the parking brake is set fully.
2) Manual transmission vehicle:
   Shift into "N" (Neutral). Hold the clutch and brake pedals fully depressed.
   CVT vehicle:
   If the gearshift lever is not in "P" (Park) position, shift it to "P" (Park). Hold the brake pedal fully depressed.
3) The "PUSH START SWITCH" message will appear in the information display in the instrument cluster. Press the engine switch (1).
4) The master warning indicator light in the instrument cluster blinks within about 10 seconds. Touch the engine switch with LOCK button side of remote controller (2) for about 2 seconds.

NOTE:
- *If you still cannot start the engine after several attempts using the above method, there may be a problem elsewhere, such as a low lead-acid battery. Consult a SUZUKI dealer or a qualified workshop for inspection.*
- *The immobilizer/keyless push start system warning light will come on for about 5 seconds while the master warning indicator light is blinking. In addition, the information display will show a certain message during this time. Refer to "Warning and indicator messages" (P.4-16) for details.*
- *You may customize the system to cause the interior buzzer to sound once for warning that remote controller is out of sensing range. Please consult a SUZUKI dealer or a qualified workshop for the customization.*
- *If the battery of the remote controller is about to become completely discharged, the corresponding message will appear in the information display when you press the engine switch to change the ignition mode to ON. For details on replacing the battery, refer to "Keyless push start system remote controller" (P.3-10).*

Stopping engine

When stopping the engine

⚠ WARNING

Except in cases of emergency, do not stop the engine while the vehicle is in motion.
- **The steering and braking operation will require more effort when the engine is stopped.**
- **The following functions will not operate:**
  - **Anti-lock Brake System (ABS)**
  - **Emergency Stop Signal (ESS)**
  - **Electronic Stability Program (ESP®)**
  - **Dual Sensor Brake Support II (DSBS II)**

NOTICE

If you stop the engine while the vehicle is in motion, the automatic transmission will be damaged.
Except in cases of emergency, do not stop the engine while the vehicle is in motion.

Vehicle condition	How to stop the engine
While the vehicle is stopped	Press the engine switch.
When the vehicle is in motion (in emergency)	Quickly press the engine switch more than 3 times or press and hold the engine switch for more than 2 seconds.

If you cannot stop the engine while the vehicle is stopped, quickly press the engine switch more than 3 times or press and hold the engine switch for more than 2 seconds. In this case, there may be a problem with the system. Consult an authorized SUZUKI dealer or a qualified workshop.

Emergency stop

In case of emergency, you can stop the engine by quickly pushing the engine switch more than 3 times, or pushing and holding the engine switch for more than 2 seconds while the vehicle is in motion.

NOTE:
Except in cases of emergency, do not stop the engine while the vehicle is in motion. The steering and braking operation will require more effort when the engine is stopped. Refer to "Braking" (P.5-152).

When returning ignition mode to LOCK (OFF)

CVT – To ensure safety, the ignition mode can be returned to LOCK (OFF) by pressing the engine switch only when the gearshift lever is placed in "P" position without pressing the knob button.

- When you return the ignition mode to LOCK (OFF) and open or close any of doors, the steering wheel will be locked.
- In the case of a CVT, to avoid wrong operation, you cannot return the ignition mode to LOCK (OFF) in the conditions:
  – The gearshift lever is in any other position than "P".
  – The gearshift lever is in "P", however the knob button of the gearshift lever is pressed.
- In the case of a CVT, if there is a malfunction of the gearshift lever, you may not be able to return the ignition mode to LOCK (OFF). In this case, consult an authorized SUZUKI dealer or a qualified workshop after performing the following procedure:
  – Lock the doors using the key to prevent theft. (The request switches and the keyless push start system remote controller cannot be used to lock them.)
  – Disconnect the negative cable from the lead-acid battery to prevent discharge.

NOTE:
When returning the ignition mode to LOCK (OFF), the message may be shown on the information display in the instrument cluster. Refer to "Warning and indicator messages" (P.4-16) for details.

LOCK (OFF) mode reminder buzzer
If the driver's door is opened without returning the ignition mode to LOCK (OFF) by pressing the engine switch, a buzzer sounds to warn you of this condition.

- If you open the driver's door after pressing the engine switch to change the ignition mode to ACC or ON (engine is stopped), the interior buzzer beeps intermittently.
  – When the ignition mode is ON (engine is stopped), push the engine switch once to return the ignition mode to LOCK (OFF), the buzzer will stop sounding.
  – When the ignition mode is ACC, push the engine switch twice to return the ignition mode to LOCK (OFF), the buzzer will stop sounding.
- If you do not return the ignition mode to LOCK (OFF), you cannot lock the doors by the request switches and the keyless push start system remote controller.

Steering lock warning buzzer
If the steering lock fails to engage due to a fault in the system when the ignition mode is turned to LOCK (OFF) by pressing the engine switch and any door (including the tailgate) is opened or closed, the interior buzzer will warn you of this condition with repeated short beeps. In this case, consult an authorized SUZUKI dealer or a qualified workshop.

Gasoline Particulate Filter (GPF) (if equipped)

The GPF filters off the soot particles in the exhaust gas, so the GPF could get clogged depending on the driving condition. The GPF is cleaned by the regenerating function that combusts the soot particles in the GPF by raising the exhaust gas temperature during driving or idling.

When a certain amount of soot particles is accumulated in the GPF, the GPF will regenerate automatically to avoid clogging the filter. Therefore, you may hear a little louder engine sounds and/or the exhaust gas temperature could be higher due to combustion of the soot particles.

⚠ CAUTION

Keep away from the exhaust pipe when the engine is running. If the GPF is regenerating, the exhaust gas temperature could be higher.

Gasoline Particulate Filter (GPF) warning light

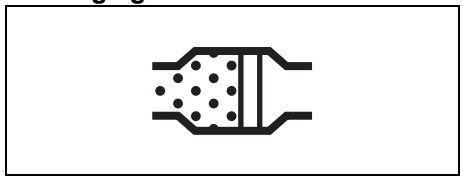

64J244

If the GPF warning light comes on when driving, the GPF is nearly clogged. You should regenerate the GPF when the GPF warning light comes on. To go out the warning light, the vehicle must stay in motion until regeneration has been completed.
The process normally takes about 25 minutes.
The optimum condition to end the process are achieved by keeping the vehicle in motion at a speed of 50 km/h (31 mph) or higher, and an engine speed higher than 2,000 rpm.
However, you should drive carefully and within the legal speed limit, and should take in to consideration the surrounding traffic condition.
If you drive your vehicle until the light goes out, the regeneration of the GPF will be completed.

NOTICE

Be sure to regenerate the GPF when the GPF warning light comes on. Failure to regenerate the GPF will cause a vehicle malfunction due to the clogged filter.

SHVS (Smart Hybrid Vehicle by Suzuki)

SHVS has an Integrated Starter Generator (ISG) instead of conventional generator to get a better fuel consumption.

Integrated Starter Generator (ISG) is a generator which incorporates a motor function.

The ISG has the following 3 functions.
- Deceleration energy regenerating function
- Engine power assist function
- Starter motor function

⚠ WARNING

Dripping engine oil, brake fluid and coolant, etc. to the ISG may cause a fire or malfunction. Do not spill them when pouring.

Deceleration energy regenerating function

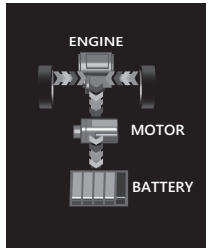

69T051180

While decelerating your vehicle, the ISG generates electricity without engine power. This reduces engine loads and improves fuel consumption.

While decelerating your vehicle, deceleration energy regenerating function will be activated when the following conditions are satisfied.
- Gearshift lever is not in “N” (Neutral).
- Clutch pedal is not depressed.
- Inside temperature of lead-acid battery is in normal condition.
- Lithium-ion battery is not fully charged and inside temperature is in normal condition.

etc.

NOTE:
The deceleration energy regenerating function may not work depending on vehicle conditions.

Engine power assist function

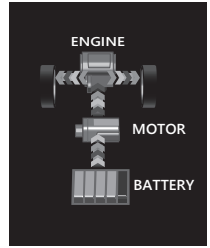

69T051190

While the vehicle is running, ISG assists engine power as a motor in the following limited condition. This reduces engine loads and improves fuel consumption.

While the vehicle is running with the engine speed at approximately 3900 rpm or less, engine power assist function will be activated when all of the following conditions are satisfied.

- SHVS system and ENG A-STOP system are working properly. (ENG A-STOP OFF indicator light is not blinking.)

- Clutch pedal is not depressed.
- ESP® is not activated.
- Accelerator pedal is excessively depressed.
- Lead-acid battery and lithium-ion battery are fully charged and each inside temperature is in normal condition.
- Engine coolant temperature is in normal condition.
- ISG inside temperature is in normal condition.

NOTE:
The engine power assist function may not work depending on vehicle conditions.

Starter motor function

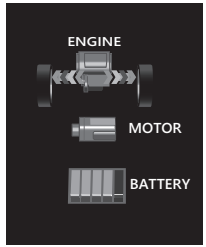

69T051200

After the engine auto stop by the ENG A-STOP system, the engine will be restarted using a cranking power of the ISG.

The starting with the ISG is quiet compared with starting by the conventional starter motor.

NOTE:
When you restart the engine by pushing the engine switch, the conventional starter motor is used and you will hear a gear engagement sound.

Lithium-ion battery indication

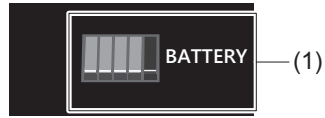

69T051210

The segments in the lithium-ion battery indicator (1) give an approximate indication of the charge of the lithium-ion battery. The number of segments that appear in the indication increases or decreases with the charge of the lithium-ion battery.

NOTE:
The indicator gives an approximate indication. The indication may be delayed or differ from the actual charge of the lithium-ion battery under certain conditions, for example, when the outside temperature is low.
Also, the minimum segment is 1 bar and the bar will never be 0. Even when 1 bar is shown, the battery level may be close to be flat.

Deceleration energy regenerating indicator light

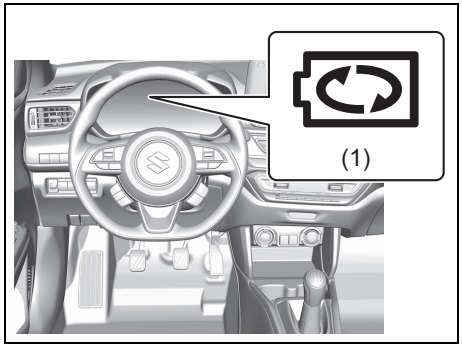

69T051220

When the deceleration energy regenerating function is working, the deceleration energy regenerating indicator light (1) comes on.

NOTE:
If the gearshift lever is in the "N" (Neutral) position, this light does not come on.

ENG A-STOP OFF light

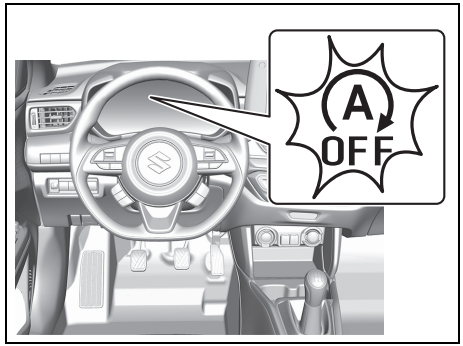

69T051230

If this indicator blinks when driving, there may be something wrong with the ENG A-STOP system or the SHVS system. You should have the system inspected by an authorized SUZUKI dealer or a qualified workshop.

ENG A-STOP system (engine auto stop start system)

The ENG A-STOP system (engine auto stop start system) automatically stops the engine while waiting briefly at a traffic light, etc., or decelerating to a stop, and automatically restarts the engine afterward. This system helps reduce emissions, improve fuel consumption and lower engine noise.

This system stops the engine temporarily under specific conditions. Before parking the vehicle for an extended period of time or leaving the vehicle, properly apply the parking brake and stop the engine with the engine switch.

If certain conditions are met, the engine is stopped automatically when decelerating (approximately 15 km/h (9 mph) or less for manual transmission vehicle, approximately 10 km/h (6 mph) or less for CVT vehicle) before stopping. However, the engine will not be stopped automatically during deceleration until confirmation of the system function is finished.

NOTE:
If your vehicle is equipped with the auto air conditioning system, you can change the automatic engine stop condition via the information display. Refer "Warning and indicator messages" (P.4-16).

⚠ WARNING

- **Do not get out of the vehicle while the engine is automatically stopped by the ENG A-STOP system. Doing so may lead to an accident.**
  If the driver's seat belt is unfastened or the driver's door is opened, the engine will restart.
  - **For manual transmission, if the driver's seat belt is unfastened or the driver's door is opened, the engine will be restarted to warn you that the engine was stopped automatically by the ENG A-STOP system.**
  - **If the driver's seat belt is unfastened, even if the brake pedal is pressed down, or the driver's door is opened, the engine will be restarted to warn you that the engine was stopped automatically by the ENG A-STOP system.**

(Continued)

⚠ WARNING

(Continued)

- **If the engine does not restart automatically after having been stopped automatically by the ENG A-STOP system, push the engine switch to start the engine.**
  Trying to move the vehicle when the engine has not yet restarted requires a strong force to turn the steering wheel or depress the brake pedal, potentially leading to an accident.

NOTICE

Since model equipped with this system use a lead-acid battery specifically for the high-efficiency idling stop system, observe the following precautions. Failure to observe these precautions may result in a malfunction of the system or a shortened battery life.

- **When replacing the battery, only use the specified type. (Do not use any other type of battery.)**
- **Do not power electrical accessories from the battery terminals.**

Lithium-ion battery

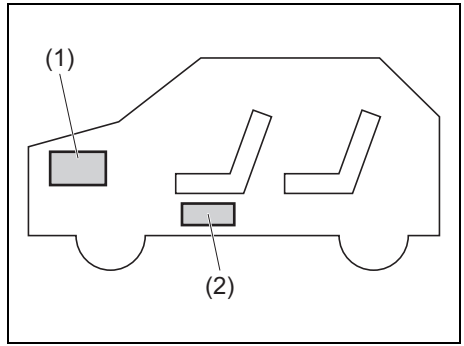

68PM00368

(1) Battery (lead-acid battery)
(2) Lithium-ion battery

This lithium-ion battery is used exclusively for the vehicle equipped with SHVS, and located below the front left side seat.

- Just like a battery (lead-acid battery), the lithium-ion battery also discharges gradually.
  To prevent the lithium-ion battery from dying, you must charge the lithium-ion battery by driving continuously for at least 30 minutes once a month.
- The lithium-ion battery is maintenance-free.
- To replace or dispose of the lithium-ion battery, consult an authorized SUZUKI dealer or a qualified workshop.

⚠ WARNING

Wrong handling of the lithium-ion battery may result in fire, electric shock or system malfunction. Accordingly, observe the instructions listed below:

- **Do not dismount or disassemble the lithium-ion battery.**
- **Do not let the lithium-ion battery come in contact with water or other liquids.**
- **Do not apply strong impact on the lithium-ion battery.**
- **Do not step on the lithium-ion battery or put articles on the lithium-ion battery.**
- **Do not disconnect the lithium-ion battery terminals or draw power from the terminals for electrical products.**

Automatic stopping/restarting of the engine

Manual transmission vehicle

1) With the brake pedal depressed, decelerate the vehicle.

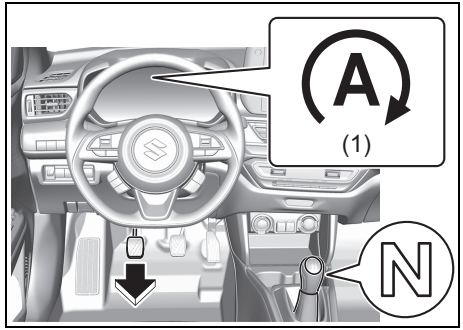

69T050190

2) When decelerating at approximately 15 km/h (9 mph) or less with the clutch pedal depressed and the gearshift lever shifted to “N”, and then release the clutch pedal, the engine will stop automatically.
   The ENG A-STOP indicator light (green) (1) will come on.
   - The ENG A-STOP system will not stop the engine automatically if all the automatic engine stop conditions are not met.
     For details, refer to “Operating conditions of ENG A-STOP system” (P.5-27).
   - During the automatic engine stop, the engine may shut down, accompanied by an interior buzzer or restarted, to ensure safety.
     For details, refer to “Precautions of when the engine is stopped automatically” (P.5-25).

NOTICE

During the automatic engine stop, do not shift the gearshift lever to a position other than “N” without depressing the clutch pedal. If the gear shift lever is in a position other than “N”, the engine will not restart automatically even if the clutch pedal is depressed.

NOTE:

- *Engine auto stop function during deceleration will be ready once the vehicle runs at a speed exceeding 10 km/h (6 mph) after restart of the engine.*
- *Even if the engine did not stop automatically before the vehicle came to a stop (still traveling at approximately 15 km/h (9 mph) or less), the engine may stop automatically once the vehicle stops.*
- *If the engine stalled by a rapid clutch operation, the engine may restart when the gearshift lever is in “N” (Neutral) position, the clutch lever is depressed, and other standby conditions are met.*

- *The audio and other electrical component can be used during the automatic engine stop, but the air conditioner will switch to the fan mode.*
- *If the vehicle is equipped with an auto air conditioner, the fan speed will be limited during the automatic engine stop (only in the auto control mode) to keep the cabin air-conditioned for a longer time.*

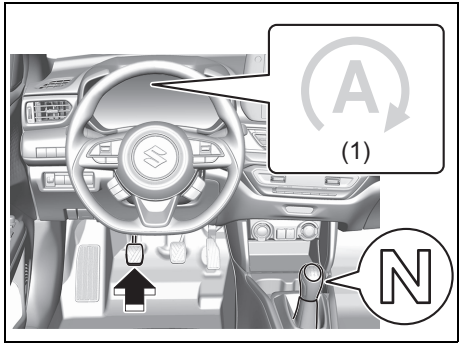

69T050250

3) Regardless of whether the vehicle has stopped or not, depressing the clutch pedal will restart the engine and ENG A-STOP indicator light (green) (1) will go off.

While the engine is stopped automatically, depressing the clutch pedal will restart the engine consuming fuel. Therefore, for fuel economy, it is recommended to depress the clutch pedal just before the vehicle start.

- Without depressing the clutch pedal, the engine may restart automatically if the automatic engine restart conditions are met.
  For details, refer to “Conditions to restart the engine automatically” (P.5-29).

NOTE:
When the engine is restarted automatically, the following conditions may be found as the hill hold control system is activated, but this is not a malfunction.

- *You may hear a sound from the engine room.*
- *As brake pedal becomes heavy, it may be difficult for you to depress it.*

CVT vehicle

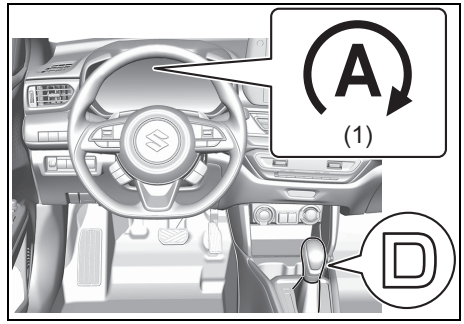

69T050260

1) Depress the brake pedal to decelerate while the gearshift lever is in the “D” position will automatically stop the engine before the vehicle is stopped (approximately 10 km/h (6 mph) or less). At the same time, the ENG A-STOP indicator light (green) (1) will remain on.
   - The engine is not stopped automatically if all of the conditions to stop the engine automatically are not met, even if the brake pedal is pressed down to decelerate.
     For details on the conditions for automatically stopping the engine, refer to “Conditions to stop the engine automatically” (P.5-28).
   - To ensure safety when the engine is stopped automatically, the interior buzzer may sound and the engine will stall, or the engine may be restarted.

NOTE:
- *The engine is not stopped automatically when decelerating without depressing the brake pedal, for example, by using engine braking.*
- *The engine may be stopped automatically when the vehicle is stopped, even if the engine is not stopped automatically before stopping the vehicle (approximately 10 km/h (6 mph) or less).*
- *Electrical components, such as the navigation system or audio system, can be used while the engine has been stopped automatically, however, the air conditioner switches to the ventilation position.*
- *For the automatic heating and air conditioning system, airflow is limited (only under automatic operation) when the engine is stopped automatically, in order to improve the cooling and heating performance.*

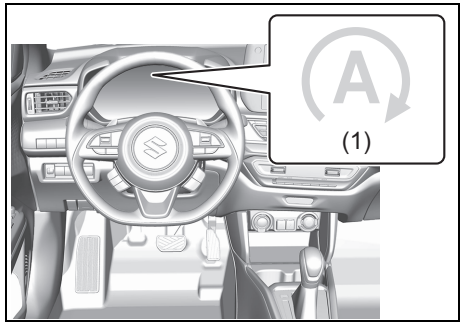

69T050270

2) When you remove your foot from the brake pedal, regardless of whether it is before or after stopping the vehicle, the engine is restarted and the ENG A-STOP indicator light (green) (1) goes off.
   - The engine is restarted automatically if the conditions to restart the engine automatically are met, even if the brake pedal is depressed.
     For details on the conditions for automatically restarting the engine, refer to “Conditions to restart the engine automatically” (P.5-29).

NOTE:
The hill hold control system is activated when the engine is restarted automatically.

Precautions of when the engine is stopped automatically

⚠ WARNING

Do not perform any of the following operations while the engine has been stopped automatically. This may result in an accident.

	Operation/Vehicle Condition	Solution
Common	Engine hood opened • The interior buzzer sounds continuous beep. • After the engine is stopped automatically, it stalls. • The ENG A-STOP indicator light (green) goes off.	To restart the engine, follow the procedure below. 1) Set the parking brake firmly, and then place the gearshift lever in the “N” position (for manual transmission) or “P” position (for CVT). 2) Securely close the engine hood. 3) Press the engine switch to restart the engine.
Manual transmission	Driver’s seat belt unfastened or driver’s door opened • The engine is restarted automatically. • The ENG A-STOP indicator light (green) blinks 5 times, then goes off.	Fasten the driver’s seat belt and/or close the driver’s door.
	Gearshift lever shifted to a position other than “N” without depressing the clutch pedal, driver’s seat belt unfastened and driver’s door opened • The interior buzzer sounds intermittently. • After the engine is stopped automatically, it stalls. • The ENG A-STOP indicator light (green) goes off.	To restart the engine, follow the procedure below. 1) Set the parking brake firmly, and then place the gearshift lever in the “N” position. 2) Close the door and buckle the seat belt. 3) Press the engine switch to restart the engine.

	Operation/Vehicle Condition	Solution
CVT	Driver's seat belt unfastened, or driver's door opened • The engine is restarted automatically. • The ENG A-STOP indicator light (green) blinks 5 times, then goes off.	Before driving, close the door and buckle the seat belt. In addition, before getting out of the vehicle, follow the procedure below. 1) Set the parking brake firmly, and then place the gearshift lever in the "P" position. 2) When the vehicle will be stopped for a long time or when you will leave the vehicle unattended, press the engine switch to stop the engine.

NOTE:
The following indicator lights in the instrument cluster do not come on when the engine is stopped automatically.
- *Malfunction indicator light, electric power steering light, oil pressure light, charging light*

Operating conditions of ENG A-STOP system

Standby conditions
If all of the following conditions are met while driving, the automatic engine stop will be permitted.

When the engine is started		• The engine is started with the engine hood securely closed.
When driving	Common	• The ENG A-STOP system is not deactivated (OFF). • The battery is charged more than a certain amount, and the temperature inside the battery is within the specified range. (#1) • The engine coolant temperature is within the specified range. • The driver's seat belt is fastened. • The driver's door is securely closed. • The engine hood is securely closed. <Vehicle with automatic heating and air conditioning system> • The air from the outlets is sufficiently cooled while cooling or sufficiently warmed while heating. • The defroster is turned off.
	Manual transmis-sion	• There is no signal to prevent stopping the engine from any electronic control systems other than the ENG A-STOP system. (#2)
	CVT	• The gearshift lever is in the "D" or "N" position. (#3) • The manual mode is not in use. • There is no signal to prevent stopping the engine from any electronic control systems other than the ENG A-STOP system.

#1: If the battery is discharged, for example, if the vehicle has not been used for a long time or electrical components, such as the navigation system or audio system, have not been used for a long time while the engine was stopped, it may take some time until the system can be in standby.

#2: If any of the warning and indicator lights affecting the ENG A-STOP system come on, the engine will not be stopped automatically.

#3: The system will be in standby even though the gearshift lever is in the "N" position, however, the engine will be stopped automatically when the vehicle is stopped, instead of when it is decelerating (approximately 10 km/h (6 mph) or less) before stopping.

Conditions to stop the engine automatically

If all of the following conditions are met while the standby conditions are met, the engine is stopped automatically when the vehicle is decelerating before stopping or when the vehicle is stopped.

When decelerating before stopping	Common	• The ABS or ESP® system has not been activated. • Brake booster vacuum pressure is normal.
	Manual transmission	• The clutch pedal is depressed, the gearshift lever is shifted into “N” position, and then the clutch pedal is released when the vehicle speed is approximately 15 km/h (9 mph) or less.
	CVT	• The brake pedal is sufficiently depressed. (#) • The vehicle is decelerating to a speed of approximately 10 km/h (6 mph) or less. • The accelerator pedal is not depressed. • The vehicle is not being driven on a steep hill. • The brake is not applied abruptly.
When the vehicle is stopped	Common	• The ABS or ESP® system has not been activated. • Brake booster vacuum pressure is normal.
	Manual transmission	• The gearshift lever is in “N” position. • The clutch pedal is released.
	CVT	• The brake was not applied abruptly before the vehicle was stopped. • The brake pedal is sufficiently depressed. (#) • The accelerator pedal is not depressed. • The vehicle is not stopped on a steep hill.

#: The engine may not be stopped automatically if the brake pedal was depressed lightly or strongly.

Conditions to restart the engine automatically

If any of the following vehicle conditions occur or operations are performed while the engine is stopped automatically, the engine is restarted automatically and the ENG A-STOP indicator light (green) goes off.

Common		• The ENG A-STOP system is deactivated (OFF). • The battery continues to be discharged. (#1) • A malfunction was detected in this system. (#2) • Brake booster vacuum pressure is low. (#1) • The temperature of the air from the outlets changes greatly, or the cooling and heating performance is insufficient. (#1) • The temperature selector was greatly set toward COOL while cooling or greatly set toward HOT while heating. (#1) • The defroster is turned on. (#1)
Manual transmission		• The clutch pedal is depressed.
CVT		• The foot is removed from the brake pedal. (#3) • The accelerator pedal is depressed. • The gearshift lever is placed in the “P”, “R” or “M” position.
When decelerating (approximately 15 km/h (9 mph) or less for manual transmission vehicle, approximately 10 km/h (6 mph) or less for CVT vehicle)	Common	• The engine hood was opened.
	Manual transmission	• The vehicle speed exceeds 15km/h (9 mph) when going down a slope. (#1)
	CVT	• The gearshift lever is placed in the “N” position. • The slope of the road suddenly changes. (#1)
When the vehicle is stopped	Common	• The driver’s seat belt is unfastened. (#1) • The driver’s door is opened. (#1) • The vehicle is moving along a slope. (#1) • Some time (about 3 minutes) has passed since the engine was stopped automatically. (#1)
	CVT	• After the gearshift lever is placed in the “N” position, it is returned to the “D” position.

#1: After the ENG A-STOP indicator light (green) blinks, it goes off. Also, the interior buzzer may sound at the same time.

#2: Depending on the situations of malfunction, it is a normal restart or the restart as #1.

#3: The engine may be restarted automatically when the brake pedal is depressed lightly. In this case, when the brake pedal is depressed again, the engine is stopped automatically and the ENG A-STOP indicator light (green) comes on again.

ENG A-STOP OFF switch

The ENG A-STOP system can be deactivated.

- To deactivate the system, press the ENG A-STOP OFF switch (1) to turn on ENG A-STOP OFF light (2).
- To activate the system once again, press the switch (1) again to turn off the indicator.
- Every time the engine is stopped manually, the system is enabled again and the ENG A-STOP OFF light (2) goes off.

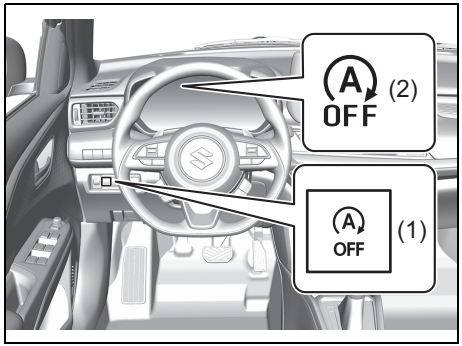

69T050280

NOTE:
Pressing the ENG A-STOP OFF switch (1) during the automatic engine stop will restart the engine automatically and the ENG A-STOP OFF light (2) will come on.

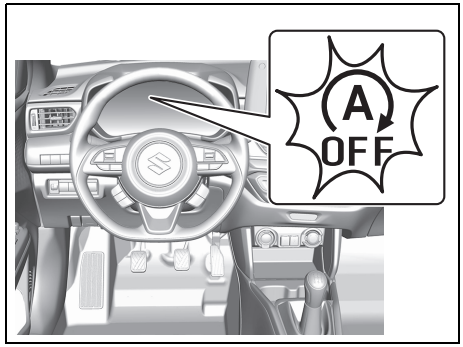

69T051230

- This indicator comes on when the ENG A-STOP system is deactivated.
- The indicator blinks when the engine switch is pressed to change the ignition mode to ON, if one of the conditions listed below is met (The ENG A-STOP system or the SHVS system does not actuate correctly while the indicator is blinking). Have the system inspected immediately by an authorized SUZUKI dealer or a qualified workshop.
  - If there is something wrong with the ENG A-STOP system, SHVS system or the lithium-ion battery.
  - An engine component (ISG) or the lead-acid battery is due for replacement.

NOTE:
If the indicator blinks during the automatic engine stop, the engine may shut down.

Information message

The information display shows the messages to let you know certain problems of the ENG A-STOP system.

Indicator	Message	Cause and remedy
69T051160	“IDLING STOP UNABAILABLE”	The ENG A-STOP system cannot stop the engine automatically because something of the actuation conditions is not met. For details, refer to “Operating conditions of ENG A-STOP system” (P.5-27).
69T051170	“ENGINE RESTARTING”	The engine is restarting automatically because one of the following automatic engine restart conditions is met. • The temperatures at air conditioner outlets have changed considerably after the automatic engine stop to the point of affecting the cooling/heating performance. • The lead-acid battery has discharged substantially. • Some time has elapsed after the start of the automatic engine stop.
69T051170	“RESTARTED”	The engine restarted automatically because the following automatic engine restart condition is met. • The negative pressure of the brake booster has dropped.

Indicator	Message	Cause and remedy
69T051170	“ENGINE RESTARTED”	The engine restarted automatically because one of the following automatic engine restart conditions is met. • The defroster is turned on. • The driver’s seat belt is released. • The driver’s door is opened. • The vehicle is started to move on a slope, etc.
Not displayed	“RESTART ENGINE”	The engine shut down because one of the following operations is performed during the automatic engine stop. • The hood is opened. • For Manual transmission vehicle, the driver’s door is opened with the driver’s seat belt is unfastened. Restart the engine by usual operation. Refer to “Starting engine” (P.5-13) for details.
Not displayed	“SELECT NEUTRAL AND DEPRSS CLUTCH”	**Manual transmission vehicle** The gearshift lever is shifted to a position other than “N” (Neutral) position without depressing the clutch pedal during the automatic engine stop. To restart the engine, place the gearshift lever in “N” (Neutral) position and depress the clutch pedal.

Air conditioning system settings by ENG A-STOP system

When using the automatic heating and air conditioning system while the engine is stopped automatically by the ENG A-STOP system, you can select the settings via the setting mode of the information display.
For details on how to use the information display, refer to “Setting mode of information display” (P.12-8).

Parking brake lever

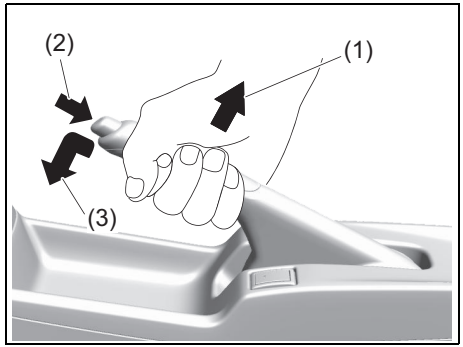

69T050290

(1) To set
(2) To release
(3) To release

The parking brake lever is located between the front seats. To set the parking brake, depress the brake pedal and pull the parking brake lever all the way up. To release the parking brake, depress the brake pedal and pull up slightly on the parking brake lever, push the button on the end of the lever with your thumb, and lower the lever to its original position.

For CVT vehicle, always set the parking brake before moving the gearshift lever to “P” (PARK) position. If you park on an incline and shift into “P” before setting the parking brake, the weight of the vehicle may make it difficult to shift out of “P” or a sound and a shock may occur when you are ready to drive the vehicle. These are not malfunctions.

When preparing to drive the vehicle, move the gearshift lever out of “P” position before releasing the parking brake.

⚠ WARNING

- **Never drive your vehicle with the parking brake on: rear brake effectiveness can be reduced from overheating, brake life may be shortened, or permanent brake damage may result.**
- **If the parking brake does not hold the vehicle securely or does not fully release, have your vehicle inspected immediately by an authorized SUZUKI dealer or a qualified workshop.**

⚠ WARNING

Always set the parking brake fully before leaving your vehicle or it may move, causing injury or damage. When parking, make sure the gearshift lever for manual transmission vehicle is in 1st gear or "R" (Reverse) and the gearshift lever for CVT vehicle is in "P" (Park). Remember, even though the transmission is in gear or in Park, you must set the parking brake fully.

⚠ WARNING

When parking the vehicle in extremely cold weather, the following procedure should be used:

1) Set the parking brake.
2) Manual transmission – turn off the engine, then shift into reverse or first gear.
CVT – shift into "P" (Park) and turn off the engine.
3) Get out of the vehicle and put chocks under the wheels.
4) Release the parking brake.
When you return to your vehicle, first set the parking brake, and then remove the wheel chocks.

⚠ WARNING

Do not leave cigarette lighters, spray cans, soft drink cans or plastic articles (such as glasses, CD cases, etc.) in sun-heated vehicle. The temperature inside the vehicle may cause as follows:

- **Gas may leak from a cigarette lighter or spray can and may lead to a fire.**
- **The glasses, plastic cards or CD cases, etc. may deform or crack.**
- **Soft drink cans may fracture.**

Parking brake reminder buzzer

A buzzer sounds intermittently to remind you to release the parking brake if you start the vehicle without fully releasing the parking brake. Check that the parking brake is fully released and the brake system warning light turns off.

Precaution for parking

Apply the parking brake firmly

When parking the vehicle on a flat place

1) With the brake pedal depressed, securely apply the parking brake lever.

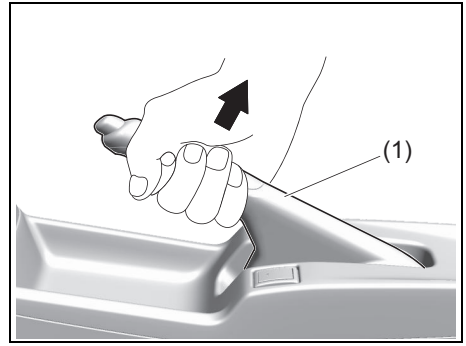

69T051140

(1) Parking brake lever

2) Shift the gearshift lever into "P" (Park) position. (only CVT vehicle)
   •Slowly release your foot from the brake pedal and check that the vehicle does not move.

⚠ CAUTION

If you are using the parking brake during cold weather, sometimes it might become frozen and impossible to release the parking brake lever. In this case, avoid parking on a slope and park in a flat place instead.

NOTE:
CVT vehicle - Even when parking the vehicle for a short time in a flat place, shift the gearshift lever into "P" (Park) position.

When parking the vehicle on a slope
Perform step 1) and 2), which are written in "When parking the vehicle on a flat place".

3) Secure the vehicle by putting a commercially-available wheel chock or a rock, etc. under the tyres so that the vehicle does not move.

⚠ WARNING

Avoid parking on a steep slope. Otherwise, there is the possibility that an accident could occur, such as if the vehicle were to accidentally start moving with nobody at the wheel.

With the engine running, the cooling fan (radiator fan) may rotate suddenly

The cooling fan (radiator fan) in the engine compartment may automatically stop and rotate depending on the conditions of the engine coolant temperature.

⚠ WARNING

If you get close to a rotating cooling fan (radiator fan), your hands, hair and clothing may get caught in it, resulting in personal injury.
With the engine running, even when the cooling fan (radiator fan) stops, it may automatically rotate. Therefore, do not get close to the cooling fan (radiator fan).

When moving the vehicle

When moving the vehicle, start the engine.

⚠ WARNING

If you coast with the engine off, stronger force than normal is required when turning the steering wheel or depressing the brake pedal, resulting in an accident.
Do not coast on a downhill slope with the engine off.

When taking a nap in the vehicle

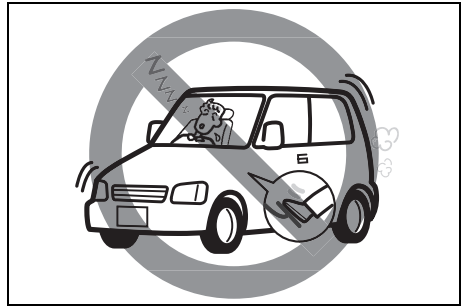

69RHS172

Do not take a nap in the vehicle with the engine running.

⚠ WARNING

- **Exhaust gases can enter the vehicle due to surrounding conditions and wind direction, possibly causing carbon monoxide poisoning.**
- **The gearshift lever could change unintentionally, or the accelerator pedal could be depressed accidentally, causing an accident.**
- **If you were to accidentally step on the accelerator pedal while you are asleep, the engine and the exhaust system could overheat, resulting in danger of fire.**

Do not park the vehicle near flammable materials

69RHS174

⚠ WARNING

If you park the vehicle near flammable materials, the exhaust pipes and exhaust gas will get hot, resulting in danger of fire.
Do not park the vehicle near flammable materials such as dry grass, paper waste and plywood.

When leaving the vehicle, stop the engine and lock doors

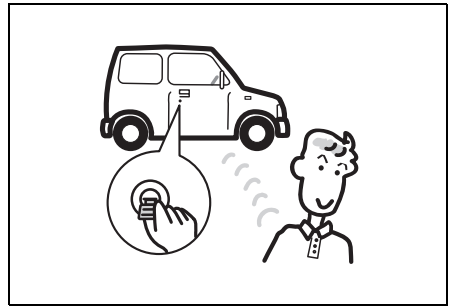

69RHS054

Even when leaving the vehicle for a short time, do not leave cash or valuables inside, as there is a risk of theft.

⚠ WARNING

If you leave the vehicle unattended with the engine running, problems such as fire or theft can occur.
Do not leave the vehicle unattended with the engine running.

Do not leave the computer and the mobile phone in the vehicle

There is the possibility of theft, or these items could become damaged due to moisture, humidity or temperature change.

Do not leave lighters and eyeglasses in the vehicle

69RHS175

⚠ WARNING

- **As the inside of the vehicle becomes hotter when parking in areas where strong sunlight causes increased temperature, there is the danger of spontaneous ignition of lighters or spray cans, fire due to explosion, the deformation or cracking of eyeglasses, plastic cards or CD cases, or the rupture of carbonated beverage cans. When parking in those areas, do not leave lighters, spray cans, plastic products (eyeglasses, plastic cards, CD cases, etc.) or carbonated beverage cans in the vehicle.**
- **When items get pushed around or when the seats are moved, it is possible that gas could escape and lead to a fire. Do not place accessories such lighters or spray cans with exposed operating parts in the glove box, in storage compartments, between the seats, on the floor, etc.**

Using transmission

⚠ WARNING

Do not hang any items on the gearshift lever and do not use the gearshift lever as a handrest. Otherwise, it could prevent proper operation of the gearshift lever and cause its malfunction, resulting in an accident.

Manual transmission

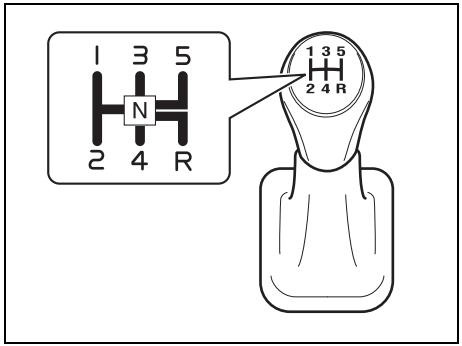

69RH016

Starting off
To start off, depress the clutch pedal all the way to the floor and shift into 1st gear. After releasing the parking brake, gradually release the clutch. When you hear a change in the engine's sound, slowly press the accelerator while continuing to gradually release the clutch.

Shifting
All forward gears are synchronized and provide quiet and easy shifting. Always depress the clutch pedal all the way to the floor before shifting gears. Keep the engine speed from rising into the red zone of the tachometer.

NOTICE

If frequently driving at low speed using a high gear position, the life cycle of the clutch may be reduced.

Downshifting maximum allowable speeds

2WD model (Vehicle to which unleaded fuel with an octane number (RON) of 90 is applied)

Downshifting	km/h (mph)
2nd to 1st	20 (12)
3rd to 2nd	80 (49)
4th to 3rd	125 (77)
5th to 4th	170 (105)*

2WD model (Vehicle to which unleaded fuel with an octane number (RON) of 95 is applied)

Downshifting	km/h (mph)
2nd to 1st	20 (12)
3rd to 2nd	80 (49)
4th to 3rd	125 (77)
5th to 4th	175 (108)*

4WD model

Downshifting	km/h (mph)
2nd to 1st	20 (12)
3rd to 2nd	80 (49)
4th to 3rd	125 (77)
5th to 4th	170 (105)*

**NOTE:*
You may not accelerate to the maximum allowable speed because of the driving situation and/or the vehicle condition.

⚠ WARNING

- **Reduce your speed and downshift to a lower gear before going down a long or steep hill. A lower gear will allow the engine to provide braking. Avoid riding the brakes or they may overheat, resulting in brake failure.**
- **When driving on slippery roads, slow down before downshifting. Excessive and/or sudden changes in engine speed may cause loss of traction, which could cause you to lose control.**

NOTICE

- **Do not downshift to a lower gear at the speed faster than the maximum allowable speeds for the next lower speed, or severe damage to engine and transmission can result.**
- **Check that the vehicle is completely stationary before you shift into reverse.**

NOTICE

- **To help avoid clutch damage, do not use the clutch pedal as a footrest while driving or use the clutch to keep the vehicle stationary on a slope. Depress the clutch fully when shifting.**
- **When shifting or starting off, do not race the engine. Racing the engine can shorten engine life and cause negative effect to smooth shifting.**

Continuously Variable Transmission (CVT)

Gearshift lever

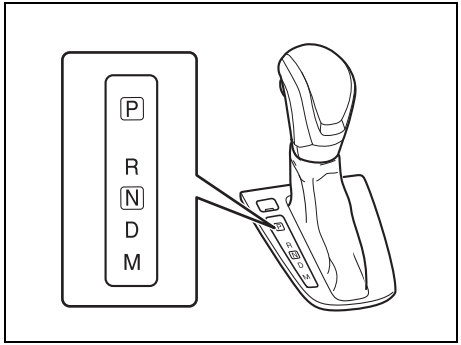

52RM30250

The gearshift lever is designed so that it cannot be shifted out of “P” position unless the ignition mode is ON and the brake pedal is depressed.

⚠ WARNING

Always depress the brake pedal before shifting from “P” (Park) (or “N” (Neutral) if the vehicle is stationary) to a forward or reverse gear, to help prevent the vehicle from moving unexpectedly when you shift.

The gearshift lever has a lock mechanism to help prevent accidental shifting. To shift the gearshift lever:

Vehicle with S-mode

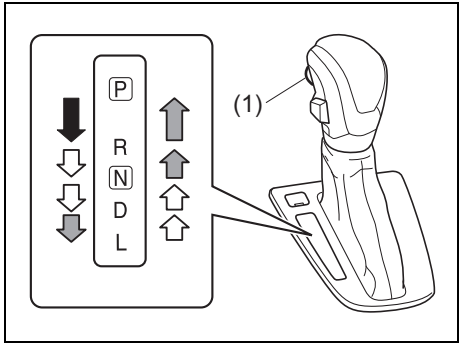

80SM108

Vehicle with manual mode

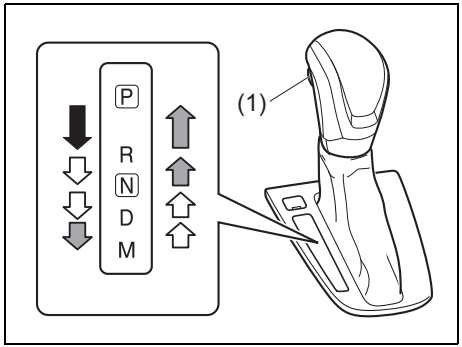

69T050300

(1) Knob button

⬇	Shift with the knob button (1) pushed in and the brake pedal depressed.
⇧ ⇩	Shift with the knob button (1) pushed in.
⇧ ⇩	Shift without the knob button (1) pushed in.

NOTE:

- *Always shift the gearshift lever without pushing in the knob button (1) except when you shift from "P" to "R", from "D" to "M" or "L", from "N" to "R" or from "R" to "P". If you always push in the knob button (1) when shifting the gearshift lever, you could shift into "P", "R", "M" or "L" by mistake.*
- *If driver's or passenger's knee hits the gearshift lever while driving, the lever could move and the gear could be changed unexpectedly.*

Use the gearshift lever positions as described below:

P (Park)
Use this position to lock the transmission when the vehicle is parked or when starting the engine. Shift into Park only when the vehicle is completely stationary.

R (Reverse)
Use this position to reverse the vehicle from stop. Make sure that vehicle is completely stationary before shifting into Reverse.

NOTICE
Do not shift the gearshift lever into "R" while moving forward, or the transmission may be damaged. If you shift into "R" when the vehicle speed is over 10 km/h (6 mph), the transmission will not shift into reverse.

N (Neutral)
Use this position for starting the engine if the engine stalls and you need to restart it while the vehicle is moving. You may also shift into Neutral and depress the brake pedal to hold the vehicle stationary during idling.

D (Drive)
Use this position for all normal driving.

With the gearshift lever in "D" range you can get an automatic downshift by pressing the accelerator pedal. The higher the vehicle speed is, the more you need to press the accelerator pedal to get a downshift.

L (Low) (vehicle with S-mode)
Use this position to provide maximum power when climbing steep hills or driving through deep snow or mud, or to provide maximum engine braking when going down steep hills.

M (manual mode)
(vehicle with manual mode)
Use this position for driving in the manual mode. Refer to “Manual mode (vehicle with manual mode)” (P.5-43) for details on how to use the manual mode.

NOTE:
If you move the gearshift lever to a lower gear while driving faster than the maximum allowable speed for the lower gear, the transmission will not actually downshift until your speed drops below the maximum speed for the lower gear.

⚠ CAUTION

For the vehicle with the keyless push start system, if you cannot press the engine switch firmly, the engine may not start.
Even if you shift the gearshift lever into “R” or “D” position without the engine running, the vehicle does not move.
If you try to move your vehicle under the above-mentioned condition, the vehicle may move in unexpected directions on a slope, etc. This may cause an accident. When starting the engine, press the engine switch firmly. Also, make sure that the engine is running by checking engine sound or warning and indicator lights.

NOTICE

Be sure to take the following precautions to help avoid damage to the CVT:
- **Make sure that the vehicle is completely stationary before shifting into “P” or “R”.**
- **Do not shift from “P” or “N” to “R”, “D”, “M” or “L” when the engine is running above idle speed.**
- **Do not rev the engine with the transmission in a drive position (“R”, “D”, “M” or “L”) and the front wheels not moving.**
- **Do not use the accelerator to hold the vehicle on a hill. Use the vehicle’s brakes.**

NOTE:
When you shift the gearshift lever into “P” and stop the engine before depressing the parking brake pedal, if you try to restart the engine and shift the gearshift lever into the position other than “P”, it may reduce gearshift lever capability, or unusual sound and shock may occur. However, this is not abnormal.

S-mode (vehicle with S-mode)
The S-mode is suitable for the following driving conditions:
- Driving on hilly, winding roads
  – You can drive more smoothly with less frequent gear changing
- Going down a steep hill
  – Some engine braking is provided

S-mode switch

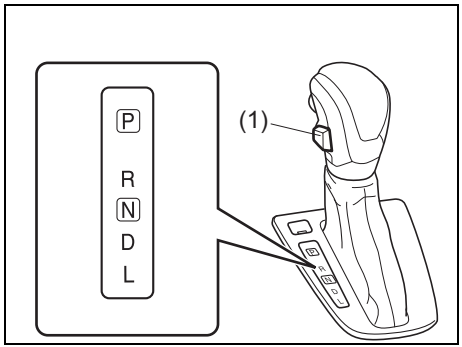

52RM30310

(1) S-mode switch

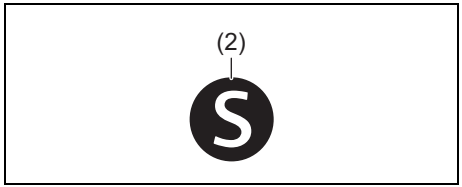

68PM00308

(2) S-mode indicator

The S-mode switch (1) is used to turn on and off the S-mode.
To turn on the S-mode, push in the switch and S-mode indicator (2) in the instrument cluster will come on. To turn off the S-mode, push in the switch again and S-mode indicator will go off.

When the engine restarts, the S-mode is turned to the off automatically.

Manual mode
(vehicle with manual mode)
The CVT can shift gears automatically. When using the manual mode, you can shift gears in the same manner as conventional manual transmission.
To use the manual mode, shift the gearshift lever from “D” to “M”.

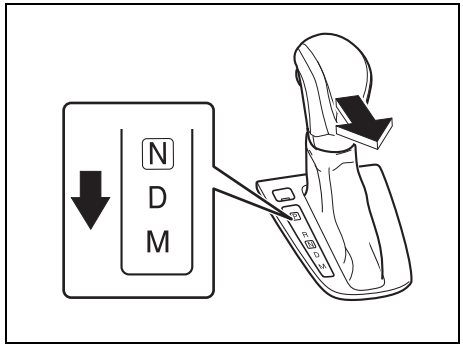

52RM30270

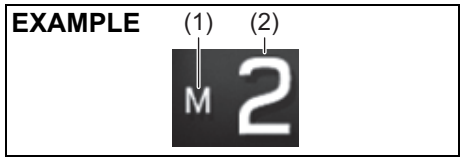

52RM30030

(1) Manual mode indicator
(2) Gear position

The information display shows the manual mode indicator and the current gear position.

NOTE:
- *The indicated gear position in the information display when you shift from “D” to “M” is the gear position that was selected automatically when the gearshift lever was in “D”.*
- *You can change to the manual mode temporarily by pulling the shift paddle on the steering wheel toward you when the gearshift lever is in “D”.*

Shifting in the manual mode
You can shift gears from 1st to 7th depending on driving speed.

NOTE:
- *When the engine is revved, the gear is shifted up automatically to prevent damage to the engine and the transmission.*
- *When the driving speed becomes slow, the gear shifts down automatically, and when the vehicle stops, the gear position will be in 1st gear without shifting the gearshift lever.*
- *If you depress the accelerator pedal a certain amount, the gear shifts down automatically even if the gearshift lever is in the manual mode.*

NOTE:
When you change gear, sometimes the transmission may not shift to the desired gear but a buzzer sounds instead. This is to maintain good drivability and to protect the transmission.

Using the shift paddle

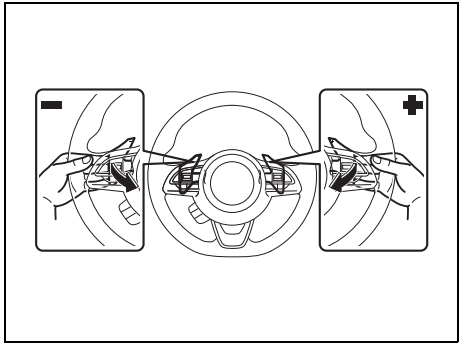

52RM30280

To shift up, pull “+” side shift paddle, located on right side of the steering wheel, toward you. When you release your finger from the switch, the switch will return to the original position.

To shift down, pull “–” side shift paddle, located on left side of the steering wheel, toward you. When you release your finger from the switch, the switch will return to the original position.

NOTE:
- *To shift gears continuously, release your finger from the shift paddle, then pull the shift paddle again. You cannot shift gears continuously while holding the shift paddle toward you.*
- *When you pull the both “+” and “–” shift paddle simultaneously, the gear may not shift.*

Canceling the manual mode
To cancel the manual mode, shift the gearshift lever from “M” to “D”.

Temporary manual mode
Pull the shift paddle toward you when driving with the gearshift lever in “D”. The information display shows the manual mode indicator and the current gear position.

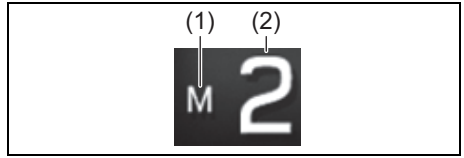

52RM30030

(1) Manual mode indicator
(2) Gear position

The temporary manual mode will be canceled automatically in the following situations.
- When you press and hold the accelerator pedal for a certain period of time without shifting gears.
- When driving speed becomes slow.

If you cannot shift CVT gearshift lever out of “P” (PARK)

Left hand drive vehicle

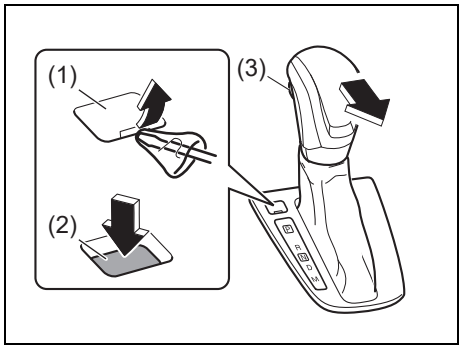

80SS03040

Right hand drive vehicle

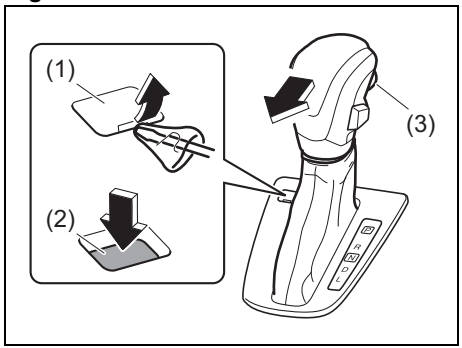

69T051260

Vehicle with a CVT have an electrically operated park-lock feature. If the vehicle’s lead-acid battery is discharged, or there is some other electrical failure, the CVT cannot be shifted out of Park in the normal way. Jump starting may correct the condition. If not, follow the procedure described below. This procedure will permit shifting the transmission out of Park.

1) Be sure the parking brake is firmly applied.
2) If the engine is running, stop the engine.
3) Make sure the ignition mode is ON or ACC.
4) Remove the cover (1) by using a flat-bladed screwdriver covered with a soft cloth as shown.
5) With the release button (2) pushed by the key or the flat end rod, push the knob button (3) and shift the gearshift lever to the desired position.

This procedure is for emergency use only. If repeated use of this procedure is necessary, or the procedure does not work as described, take the vehicle to an authorized SUZUKI dealer or a qualified workshop for repair.

Gearshift indicator

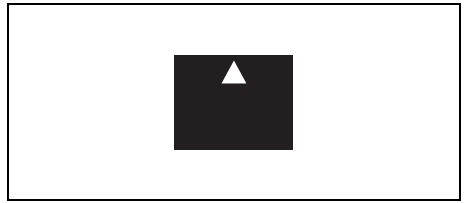

52RM30410

In the following cases, the gearshift indicator is indicated in the information display when the ignition mode is ON.

- For manual transmission vehicle, when the gearshift lever is in a position other than “N” (Neutral).
- For CVT vehicle, when using the manual mode.

The electronic control system monitors driving condition (such as vehicle speed and/or engine revolution), and it shows which gear position is optimal for your driving with the indication on the display.

Manual transmission vehicle
If UP/DOWN arrow is indicated in the display while driving, we recommend you to shift up or down the gear. It is the optimal gear position for a driving condition that reduces the over revolution and stress to the engine, and improves fuel consumption.

CVT vehicle (when using the manual mode)
If UP arrow is indicated in the display while driving, we recommend you to shift up the gear until the arrow disappears. It is the optimal gear position for a driving condition that reduces the over revolution and stress to the engine, and improves fuel consumption.

For details on how to use the transmission, refer to “Using transmission” (P.5-38).

⚠ WARNING

The gearshift indicator is designed to indicate optimal gear position for your driving, however, a driver will not be relieved from the duty of care of driving operation or gear change with this indicator.
To drive safe, do not gaze the gearshift indicator, pay attention to your driving situation and shift up or down if necessary.

NOTE:
- *For manual transmission vehicle, the gearshift indicator is not indicated when the gear position is in “N” (Neutral).*
- *For manual transmission vehicle, if you depress the clutch pedal while UP/DOWN arrow is indicated, the indication will disappear.*
- *In ordinary driving, UP/DOWN arrow will disappear when you release your foot from the accelerator pedal.*
  If your vehicle is equipped with the adaptive cruise control and while it is working, however, UP/DOWN arrow (for manual transmission vehicle) or UP arrow (for CVT vehicle, when using the manual mode) may be indicated continuously depending on driving conditions. It means that the indicated gear position is optimal for the current cruising speed.
- *The indication of gearshift indicator timing may differ depending on the vehicle condition and/or driving situation even in the same vehicle speed and engine revolution.*
- *If any of the electrical systems such as radar brake support system, Dual Sensor Brake Support II (DSBS II) system, or ESP® system is working, the gearshift indicator will disappear temporarily.*

Example of the gearshift indicator

Manual transmission

Indication	Description
	Lower gear position is selected for the vehicle speed and/or engine revolution. Changing to a higher gear position is recommended. • In this case, shifting up is recommended.
	Higher gear position is selected for the vehicle speed and/or engine revolution. Changing to a lower gear position is recommended. • In this case, shifting down is recommended.

CVT (when using the manual mode)

Indication	Description
	Lower gear position is selected for the vehicle speed and/or engine revolution. Changing to a higher gear position is recommended. • In this case, shifting up 3rd or upper gear position is recommended.

When driving the vehicle with Continuously Variable Transmission (CVT)

Transmission warning light

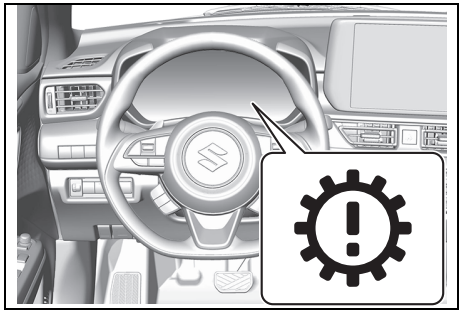

69T050310

The transmission warning light is located in the instrument cluster.

- If there is a problem with the CVT, this light may light up with the engine switch in ON mode. If the transmission warning light lights up, stop driving immediately and consult an authorized SUZUKI dealer or a qualified workshop.

Be careful not to depress the wrong pedal

To prevent mistakes in pedal operation, touch the accelerator pedal and the brake pedal with your foot to double-check their positions before starting the engine.

⚠ WARNING

Mistaking the accelerator pedal for the brake pedal, or vice-versa, could cause accidents.
Be careful not to depress the wrong pedal.

Depress the brake pedal with right foot

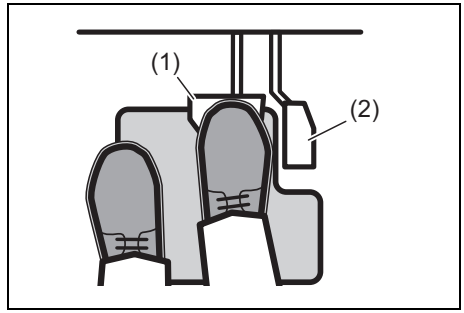

69T050330

(1) Brake pedal
(2) Accelerator pedal

Proper braking operation cannot be performed with your left foot. Ensure that you are in the habit of depressing the brake pedal with only your right foot.

When operating the gearshift lever

- When repeating to drive the vehicle back and forth, you may forget that the gearshift lever is in “R”. Shortly after reversing the vehicle, shift the gearshift lever from “R” to “N”.
- When repeating to move the vehicle back and forth for change of direction, stop the vehicle completely and then operate the gearshift lever.

⚠ WARNING

Operating the gearshift lever with the accelerator pedal depressed could cause the vehicle to suddenly start moving and lead to an accident.
Never operate the gearshift lever with the accelerator pedal depressed.

Visually Check the Position of Gearshift Lever

Visually check the position of gearshift lever as follows:
- For starting or exiting the vehicle, the gearshift lever should be in “P”.
- For driving the vehicle forward, the gearshift lever should be in “D”.
- For driving the vehicle in reverse, the gearshift lever should be in “R”.

When leaving the vehicle

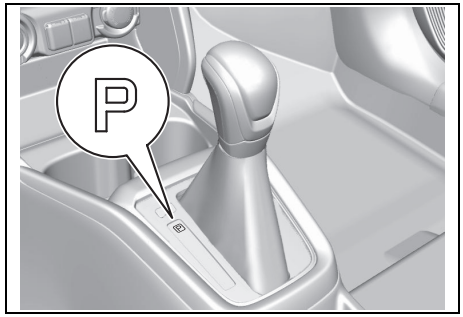

69T050320

⚠ WARNING

Never leave the vehicle unattended with the engine on. If the gearshift lever is in the other position than “P”, there is the danger that the vehicle could move by itself. In addition, when getting into the vehicle, be sure not to accidentally move the gearshift lever or depress the accelerator pedal. Otherwise, the vehicle could unexpectedly move.

Characteristics of the vehicle with Continuously Variable Transmission (CVT)

CVT vehicle do not require manual clutch operation, as they control clutch operation electronically to make driving easier. However, there are special functions and operational precautions, specific to these vehicles.

Be Careful of Creeping Function

When the vehicle is stopped but still running with the gearshift lever in any position other than “P” or “N”, the vehicle moves slowly without the accelerator pedal depressed. This is known as the creeping function.

NOTE:
- *When placing the gearshift lever in any position other than “P” or “N”, be sure to depress the brake pedal firmly.*
- *The creeping function may activate strongly immediately after starting the engine or when operating the air conditioner. Make sure to depress the brake pedal firmly.*

Kickdown

When fully depressing the accelerator pedal while driving (excluding at a low vehicle speed), the transmission automatically shifts down and engine speed increases, enabling strong acceleration. This is called as kickdown.
When you want to accelerate to pass another vehicle, etc., depress the accelerator pedal all the way down. Doing so engages kickdown and provides powerful acceleration.

⚠ CAUTION

When depressing the accelerator pedal all the way down, there is the risk of unexpected rapid acceleration, due to kickdown.
To accelerate normally, slowly depress the accelerator pedal.

Shifting control on an uphill slope and a downhill slope

The shifting control on an uphill slope and a downhill slope operates when the gear-shift lever is in “D”.

- When this shifting control judges that you drive the vehicle on an uphill slope, the gear will shift down, keep the high engine revolutions and lead to smooth driving by a few operations of accelerator pedal.
- When this shifting control judges that you drive the vehicle on a downhill slope, the gear will shift down and the engine braking will be applied.

How to drive the vehicle with Continuously Variable Transmission (CVT)

For proper operation, refer to “Continuously Variable Transmission (CVT)” (P.5-40).

Sitting on the driver’s seat

1) Adjust the seat position at which you can steadily depress the pedals and easily handle the steering wheel. Adjust the steering wheel position to your preference.

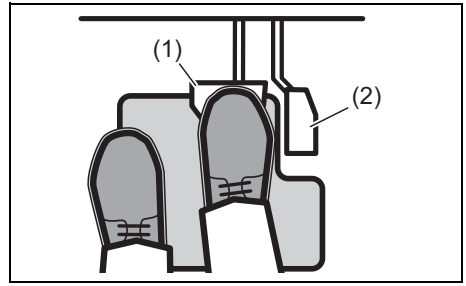

69T050330

2) Check the position of the brake pedal (1) and the accelerator pedal (2) with your right foot.
3) Check the position of the parking brake lever.

Starting the engine

For details on how to start the engine, refer to “Starting engine” (P.5-13).

1) Make sure that the parking brake is firmly applied.

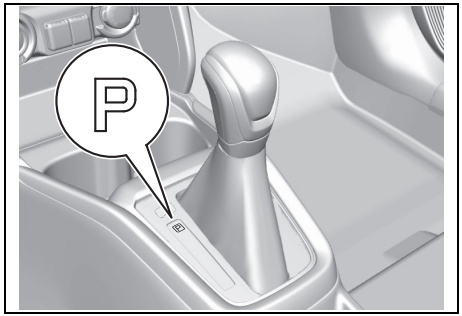

69T050320

2) Check that the gearshift lever to “P” (Park) position.

NOTE:
Even when the gearshift lever is in “N”, you can start the engine. However, start the engine with the gearshift lever in “P” for safety.

3) Depress the brake pedal with your right foot.
4) Start the engine.

Starting the vehicle

Normal starting

1) Depress the brake pedal firmly with your right foot.
2) Shift the gearshift lever in “D” for moving forward or “R” for moving in reverse. Visually check the position of the gearshift lever.
3) Release the parking brake and check that the brake warning light on the instrument cluster turns off.
4) Release your right foot from the brake pedal slowly. Depress the accelerator pedal slowly and carefully for smooth starting.

⚠ CAUTION

For the vehicle with the keyless push start system, if you cannot press the engine switch firmly, the engine may not start. Even if you shift the gearshift lever into “R” or “D” position without the engine running, the vehicle does not move.
If you try to move your vehicle under the above-mentioned condition, the vehicle may move in unexpected directions on a slope, etc. This may cause an accident.
When starting the engine, press the engine switch firmly. Also, make sure that the engine is running by checking engine sound or warning and indicator lights.

Starting on a steep uphill slope

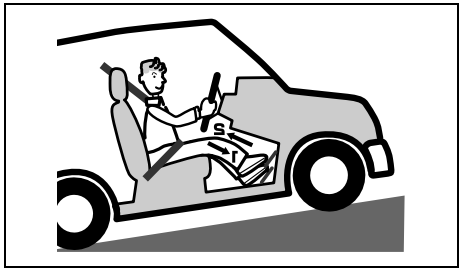

82K202

Perform step 1) and 2) of “Normal starting”.

3) With the brake pedal depressed, securely apply the parking brake lever.
4) Release your right foot from the brake pedal slowly. Depress the accelerator pedal slowly and carefully.
5) By checking the feeling that the vehicle starts to move, release the parking brake lever for starting the vehicle.

NOTE:
For the vehicle with the hill hold control system, there is the function which prevents the vehicle from rolling downward for a while when starting the vehicle on a steep uphill slope.

Driving the Vehicle

Normal driving

When the gearshift lever is shifted into “D” and the vehicle is driven, the gear will be shifted automatically according to the vehicle speed and how far the accelerator pedal is depressed.

⚠ WARNING

If you shift the gearshift lever into “N” while driving, engine braking does not function in this gear position and an accident could occur. Except in times of emergency, do not shift the gearshift lever into “N” while driving.

Rapid acceleration driving

When you want to accelerate to pass another vehicle, etc., depress the accelerator pedal all the way down. Doing so engages kickdown and provides powerful acceleration.

Driving on an uphill slope

When depressing the accelerator pedal to maintain speed while driving on an uphill slope in “D”, the engine rotation speed may suddenly increase due to kickdown.

If you turn on the power mode switch beforehand depending on inclination of the uphill slope, strong and smooth driving without a lot of changes of the engine revolutions will be possible.

Driving on a downhill slope

When driving on a downhill slope in “D”, engine braking may not be very effective, and vehicle speed may become too high.

- Set the gearshift lever to manual mode beforehand, shift down to the appropriate gear position by operating “–” side of the shift paddle switch depending on inclination of the downhill slope, and use engine braking in tandem with regular braking.

⚠ WARNING

If you continuously depress the brake pedal on a downhill slope, the brakes could overheat and become ineffective.
Use engine braking in tandem with regular braking when driving on a steep or long downhill slope.

NOTE:
For the vehicle with the hill hold control system, there is the function which keeps the constant vehicle speed on a steep downhill slope for assisting your driving.

Stopping the Vehicle Temporarily

1) With the gearshift lever in the driving position, stop the vehicle and firmly depress the brake pedal.
- To temporarily stop the vehicle on a steep slope, pull the parking brake lever if necessary.
- If you are likely to stop the vehicle for a long time, put the gearshift lever into the “N”.

2) To avoid making a mistake when starting to move the vehicle again, visually check that the position of the gearshift lever and the gearshift lever position/ gear position indicator in the instrument cluster are correct, and that the parking brake is released.

⚠ WARNING

If the gearshift lever is in the position other than “P” or “N”, there is the danger that revving the engine could cause unexpected movement and result in an accident.
When the vehicle is temporarily stopped, do not rev the engine.

NOTICE

If you try to stop the vehicle on an uphill slope by operating the accelerator pedal, the transmission fluid will overheat, resulting in a malfunction.
Do not stop the vehicle on an uphill slope by operating the accelerator pedal.

Parking the Vehicle

1) Completely stop the vehicle.
2) With the brake pedal depressed, pull the parking brake lever firmly.

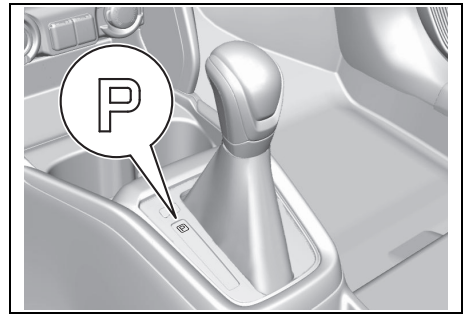

69T050320

3) Shift the gearshift lever into “P”, stop the engine and slowly release your foot from the brake pedal.
- Visually check that the gearshift lever is in “P”.

⚠ WARNING

If the gearshift lever is in the position other than “P”, the shift lock will not operate, resulting in wrong operation of the gearshift lever and an accident.
When you park the vehicle, shift the gearshift lever into “P” and then stop the engine.

NOTE:
When you shift the gearshift lever into "P" and stop the engine before pulling the parking brake lever, if you try to restart the engine and shift the gearshift lever into the position other than "P", it may reduce gearshift lever capability, or unusual sound and shock may occur. However, this is not abnormal.

4) Press the engine switch to change the ignition mode to "LOCK" (OFF).

Reversing the Vehicle

Correct posture of driving
When driving the vehicle in reverse, your body's posture will become twisted, making it difficult to depress the pedals correctly. Ensure that you are able to maintain proper contact and pressure on the brake pedal and the accelerator pedal while operating the vehicle.

When repeating forward and reverse movements
When repeating forward and reverse movements while parking in a garage, etc., depress the brake pedal to stop completely, then operate the gearshift lever, and check the gearshift lever position/gear position indicator in the instrument cluster to confirm your selection of "D" for forward movement or "R" for reverse movement.

NOTE:
When repeating forward and reverse movements, you may forget that the gearshift lever is in "R". Shortly after reversing the vehicle, shift the gearshift lever from "R" to "N".

Other Points to be Noted

When moving the vehicle in short distance

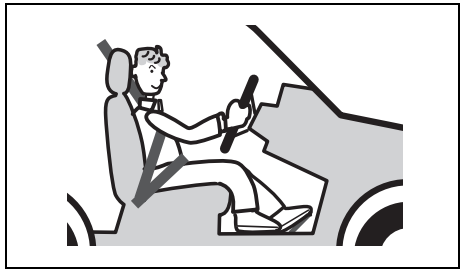

80J014

Even when moving the vehicle only in short distance, maintain correct driving posture to ensure proper contact and pressure on the brake pedal and the accelerator pedal.

⚠ CAUTION

If you allow the vehicle to move backward by coasting while the gearshift lever is in a forward-driving position ("D", "L" or "M"), or allow it to move forward by coasting while in a reverse-driving position ("R"), the engine could stall, reducing braking and steering capability and possibly resulting in an accident. Also, this could cause a malfunction of the vehicle.
When driving the vehicle on slopes, do not perform the above-mentioned operations.

When stopping the vehicle

NOTICE

If you shift the gearshift lever into "P" even while the vehicle is slightly in motion, the automatic transmission will be damaged.
Do not shift the gearshift lever into "P" even while the vehicle is slightly in motion.

Speed limiter (if equipped)

The speed limiter allows you to choose a maximum speed that you do not wish to exceed.

System components

- **Meter display**

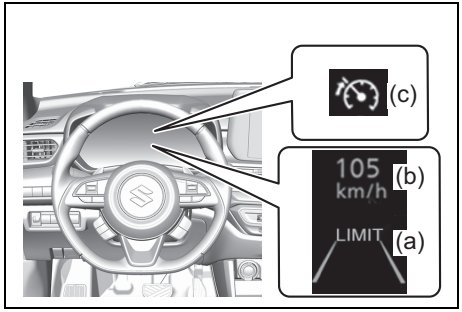

69T050520

(a) Information display
(b) Set vehicle speed
(c) Speed limiter indicator

- **Switches**

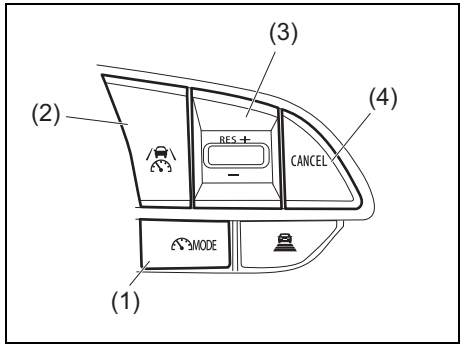

69T050010

(1) Driving assist mode select switch
(2) Driving assist switch
(3) “RES +” / “–” switch
(4) “CANCEL” switch

Using the speed limiter

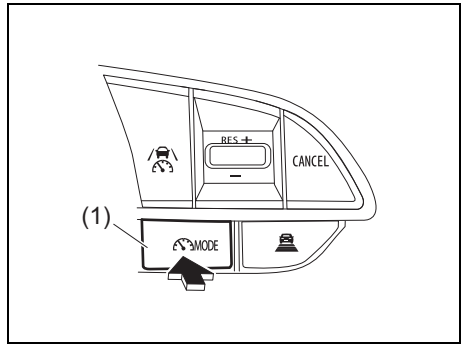

69T050550

1) Press the driving assist mode select switch (1) to select speed limiter.

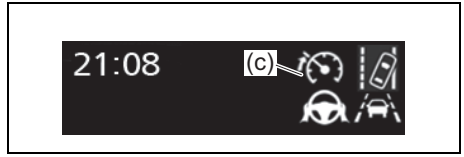

69T050560

The speed limiter indicator (c) will illuminate in white.

NOTE:
If the adaptive cruise control is in standby condition:

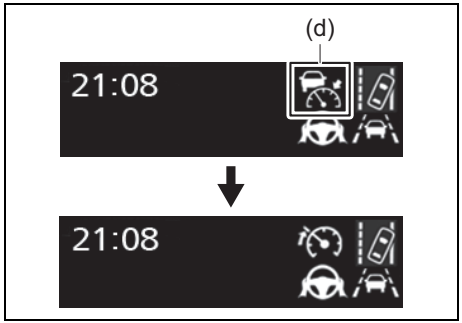

69T050080

- *When the adaptive cruise control is in standby condition (the adaptive cruise control indicator (d) illuminates in white), press the driving assist mode select switch (1) to switch from adaptive cruise control to speed limiter.*
- *When the adaptive cruise control is activated (the adaptive cruise control indicator illuminates in green), the driving assist mode cannot be switched from adaptive cruise control to speed limiter.*

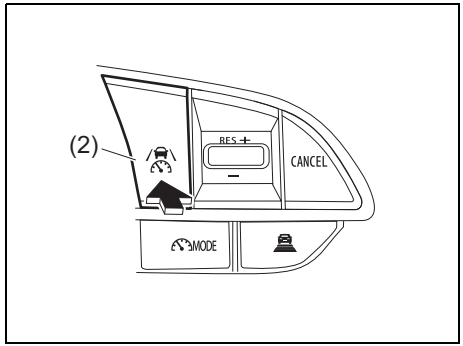

69T050570

2) Using the accelerator pedal, accelerate or decelerate to the desired vehicle speed (approximately 30 km/h (19 mph) or more), and press the driving assist switch (2) to set the set vehicle speed.

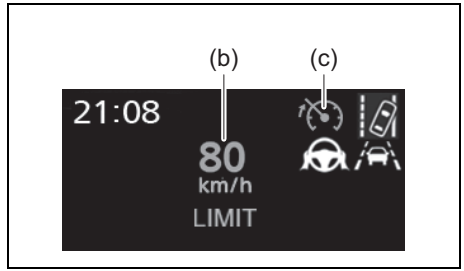

69T050020

The speed limiter indicator (c) will change from illuminated in white to green. The set vehicle speed (b) will be displayed on the information display (a) in green. If the vehicle speed is set while driving at below approximately 30 km/h (19 mph), the set vehicle speed will be set to approximately 30 km/h (19 mph).

Exceeding set vehicle speed

The set vehicle speed can be exceeded temporarily by quickly depressing the accelerator pedal all the way down. While the vehicle speed is exceeded, the set vehicle speed (b) will be displayed as follows.

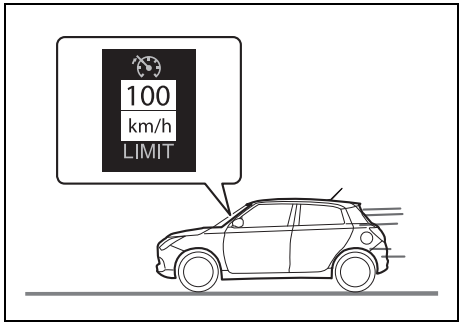

69T050540

If the accelerator pedal is released to return below the maximum speed, the function will restore.

NOTE:

- *When the accelerator pedal is depressed slowly, the vehicle speed may not exceed the set vehicle speed. To exceed the maximum speed, depress the accelerator pedal all the way down quickly or press driving assist switch (2) or "CANCEL" switch (4) to cancel the speed limiter temporarily.*
- *If the speed limiter cannot prevent the vehicle from exceeding the maximum speed in such cases as when going down a steep hill, or under excessive acceleration, the set vehicle speed (b) will be displayed as follows and the buzzer will sound.*

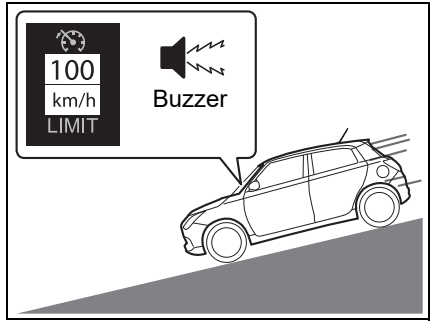

69T050530

In this case, decelerate to return below the maximum speed using the brake pedal.

Adjusting the set vehicle speed

Adjusting the set vehicle speed using the switches

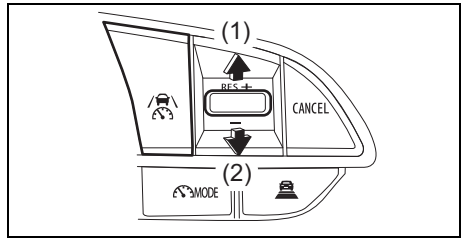

69T050420

(1) Increase set vehicle speed
(2) Decrease set vehicle speed

Short press adjustment:
Press the switch

Long press adjustment:
Press and hold the switch until the desired set vehicle speed is reached.

The set vehicle speed will increase or decrease as follows:

- Short press adjustment:
  By 1 km/h (0.6 mph) or 1 mph (1.6 km/h) each time the switch is pressed.
- Long press adjustment:
  Increases or decreases in 5 km/h (3.1 mph) or 5 mph (8 km/h) increments continuously while the switch is pressed and held.

The set vehicle speed adjustment increment can be changed through a customize setting. Refer to “Setting mode of information display” (P.12-8).

Setting to the current speed

1) Press “CANCEL” switch (4).
2) Accelerate or decelerate to the desired speed.
3) Press the driving assist switch (2), the set vehicle speed (b) and the speed limiter indicator (c) illuminate in green (active state). The current vehicle speed is set as the set vehicle speed.

Canceling/resuming control

- To cancel the speed limiter, press driving assist switch (2) or “CANCEL” switch (4). Set vehicle speed (b) and speed limiter indicator (c) will illuminate in white (standby condition).
- To resume the previously set vehicle speed, pull up the “RES +” / “–” switch (3). The set vehicle speed (b) and speed limiter indicator (c) will illuminate in green (active state).

Speed limiter with traffic sign recognition

When traffic sign recognition function is enabled and the speed limiter is activating, if a speed limit sign is detected, the detected speed limit will be displayed with an up/down arrow in the information display. The set vehicle speed can be increased/reduced to the detected speed limit by pulling up the “RES +” / “–” switch (3) and hold it in the “RES +” position or pulling down the “RES +” / “–” switch (3) and hold it in the “–” position.

When the set vehicle speed is lower than the detected speed limit

- Pull up the “RES +” / “–” switch (3) and hold it in the “RES +” position.

When the set vehicle speed is higher than the detected speed limit

- Pull down the “RES +” / “–” switch (3) and hold it in the “–” position.

NOTE:

The speed limiter with traffic sign recognition may not operate properly when

As the speed limiter with traffic sign recognition may not operate properly in situations where the traffic sign recognition may not operate or cannot detect signs correctly, when using this function, make sure to confirm the actual speed limit.

In the following situations, the set speed may not change to the detected speed limit by pressing and holding the “RES +” / “–” *switch (3):*

- *When the detected speed limit is the same as the set speed*
- *When the detected speed limit is outside of the speed range which the speed limiter system can operate*

SUZUKI SAFETY SUPPORT

SUZUKI SAFETY SUPPORT consists of the driving assist systems and contributes to a safe and comfortable driving experience.

⚠ WARNING

SUZUKI SAFETY SUPPORT

SUZUKI SAFETY SUPPORT is designed to under the assumption that the driver will drive safely, and is designed to help reduce the impact to the occupants in a collision and assist the driver under normal driving conditions.
As there is a limit to the degree of recognition accuracy and control performance that this system can provide, do not overly rely on this system. The driver is solely responsible for paying attention to the vehicle's surroundings and driving safely.

(Continued)

⚠ WARNING

(Continued)

For safe use

- **Do not overly rely on this system. The driver is solely responsible for paying attention to the vehicle's surroundings and driving safely. This system may not operate in all situations and provided assistance is limited. Over-reliance on this system to drive the vehicle safely may lead to an accident resulting in death or serious injury.**
- **Do not attempt to test the operation of the system, as it may not operate properly, possibly leading to an accident.**
- **When driver's attention is necessary or the system has malfunction, a warning message will appear or a warning buzzer will sound to get your attention for driving. When you see a warning message on the display, follow the message to drive safely.**
- **Depending on external noise, the volume of the audio system, etc. it may be difficult to hear the warning buzzer. Also, depending on the road conditions, it may be difficult to recognize the operation of the system.**

(Continued)

⚠ WARNING

(Continued)

When it is necessary to disable the system

In the following situations, make sure to disable the system.
Failure to do so may lead to the system not operating properly, possibly leading to an accident resulting in death or serious injury.

- **When the vehicle is tilted due to being overloaded or having a flat tyre**
- **When towing another vehicle**
- **When the vehicle is being transported by a truck, ship, train, etc.**
- **When the vehicle is raised on a lift and the tyres are allowed to rotate freely**
- **When inspecting the vehicle using a drum tester such as a chassis dynamometer or speedometer tester, or when using an on vehicle wheel balancer**
- **When the vehicle is driven in a sporty manner or off-road**
- **When using an automatic car wash**

(Continued)

⚠ WARNING

(Continued)

- **When a sensor is misaligned or deformed due to a strong impact being applied to the sensor or the area around the sensor**
- **When accessories which obstruct a sensor or light are temporarily installed to the vehicle**
- **When a compact spare tyre or tyre chains are installed to the vehicle or an emergency tyre puncture repair kit has been used**
- **When the tyres are excessively worn or the inflation pressure of the tyres is low**
- **When tyres other than the manufacturer specified size are installed**
- **When the vehicle cannot be driven stably, due to a collision, malfunction, etc.**

NOTE:
The system's detection of preceding vehicles, obstacles, parking (lot) lines and road signs is limited within field of view.
Also, it will take several seconds to become subject to control and alarm after an object enters the detectable field of view.

Driving assist systems

- Dual Sensor Brake Support II (DSBS II)
- Lane departure prevention system
- Vehicle swaying warning
- Lane keep assist
- High beam assist
- Traffic sign recognition
- Adaptive cruise control
- Adaptive cruise control (with following function for all speeds)
- Parking sensors
- Blind Spot Monitor
- Rear Cross Traffic Alert
- Driver Monitoring System

⚠ WARNING

<u>If accurate tyre rotation speed cannot be detected</u>

If accurate tyre rotation speed cannot be detected such as the specified tyre pressure is not maintained, following functions may not operate properly.

- **Dual Sensor Brake Support II (DSBS II)**
- **Lane departure prevention system**
- **Lane keep assist**
- **Adaptive cruise control**
- **Adaptive cruise control (with the following function for all speeds)**

Sensors used by SUZUKI SAFETY SUPPORT

Various sensors are used to obtain the necessary information for system operation.

Sensors which detect the surrounding conditions

Front

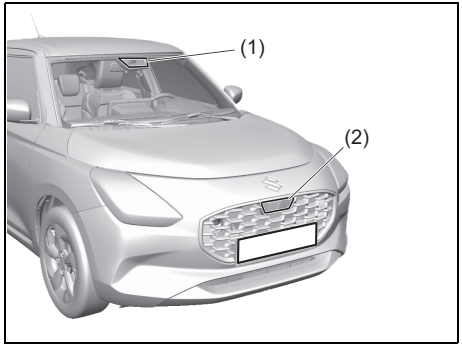

69T050920

(1) Front camera (DSBS II)
(2) Front radar (DSBS II)

Rear

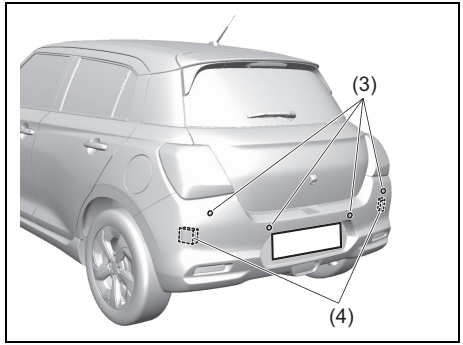

69T050610

(3) Ultrasonic sensors
(4) Radar sensor (rear)

⚠ WARNING

<u>To prevent malfunction of the front camera (DSBS II)</u>

Observe the following precautions. Failure to do so may lead to the front camera (DSBS II) not operating properly, possibly leading to an accident resulting in death or serious injury.

- **Always keep the windshield clean.**
  - **If the windshield is dirty or covered with an oily film, water droplets, snow, etc., clean the windshield.**
  - **Even if a glass coating agent is applied to the windshield, it will still be necessary to use the windshield wipers to remove water droplets, etc. from the area of the windshield in front of the front camera (DSBS II).**
  - **If the inner side of the windshield where the front camera (DSBS II) is installed is dirty, contact an authorized SUZUKI dealer or a qualified workshop for details.**

(Continued)

⚠ WARNING

(Continued)

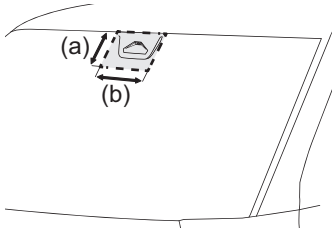

69T051250

(a) Approximately 15 cm (5.9 inch)
(b) Approximately 25 cm (9.8 inch)

- **Do not attach stickers (including transparent stickers) or other items to the area of the windshield in front of the front camera (DSBS II) (shaded area in the illustration).**
- **Do not place anything near the front of the windshield that may block the view of the front camera (DSBS II).**
- **If the part of the windshield in front of the front camera (DSBS II) is fogged up or covered with condensation or ice, use the windshield defogger to remove the fog, condensation, or ice.**

(Continued)

⚠ WARNING

(Continued)

- **If water droplets cannot be properly removed from the area of the windshield in front of the front camera (DSBS II) by the windshield wipers, replace the wiper insert or wiper blade.**
- **When replacing the front wiper body or blades, use the specified ones (for more information, contact an authorized SUZUKI dealer or a qualified workshop).**
- **Do not attach window tint to the windshield.**
- **Replace the windshield if it is damaged or cracked.**
  If the windshield has been replaced, recalibration of the front camera (DSBS II) will be necessary.
  Contact an authorized SUZUKI dealer or a qualified workshop for details.
- **Do not allow liquids to contact the front camera (DSBS II).**
- **Do not allow bright lights to shine into the front camera (DSBS II).**

(Continued)

⚠ WARNING

(Continued)

- **Do not damage the lens of the front camera (DSBS II) or allow it to become dirty.**
  When cleaning the inside of the windshield, do not allow glass cleaner to contact the lens of the front camera (DSBS II). Do not touch the lens of the front camera (DSBS II).
  If the lens of the front camera (DSBS II) is dirty or damaged, contact an authorized SUZUKI retailer or a qualified workshop for details.
- **Do not subject the front camera (DSBS II) to a strong impact.**
- **Do not change the position or orientation of the front camera (DSBS II) or remove it.**
- **Do not disassemble the front camera (DSBS II).**
- **Do not modify any parts around the front camera (DSBS II), such as the inside rear view mirror or ceiling.**
- **Do not attach accessories which may obstruct the front camera (DSBS II) to the hood, front grille, or front bumper.**
  Contact an authorized SUZUKI retailer or a qualified workshop for details.

(Continued)

⚠ WARNING

(Continued)

- **If a surfboard or other long object is to be mounted on the roof, make sure that it will not obstruct the front camera (DSBS II).**
- **Do not modify or change the headlights and other lights.**

Front camera (DSBS II) installation area on the windshield

If the system determines that the windshield may be fogged up, it will automatically operate the heater to defog the part of the windshield around the front camera (DSBS II). When cleaning, etc., be careful not to touch the area around the front camera (DSBS II) until the windshield has cooled sufficiently, as touching it may cause burns.

(Continued)

⚠ WARNING

(Continued)

To prevent malfunction of the front radar (DSBS II)

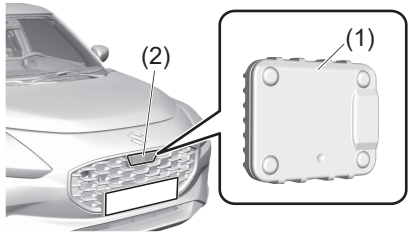

69T050620

(1) Front radar (DSBS II)
(2) Front radar cover

Observe the following precautions. Failure to do so may lead to the front radar (DSBS II) not operating properly, possibly leading to an accident resulting in death or serious injury.

- **Keep the front radar (DSBS II) and front radar cover clean at all times. Clean the front of the front radar (DSBS II) or the front or back of the front radar cover if it is dirty or covered with water droplets, snow, etc. Clean the front radar (DSBS II) and front radar cover with a soft cloth so as to not mark or damage them.**

(Continued)

⚠ WARNING

(Continued)

- **Do not attach accessories, stickers (including transparent stickers), aluminum tape, etc. to the front radar (DSBS II) or front radar cover and their surrounding area.**
- **Do not subject the front radar (DSBS II) or its surrounding area to impact. If the front radar (DSBS II), the front grille, or front bumper has been subjected to a impact, have the vehicle inspected by an authorized SUZUKI dealer or a qualified workshop.**
- **Do not disassemble the front radar (DSBS II).**
- **Do not modify or paint the front radar (DSBS II) or front radar cover, or replace them with anything other than SUZUKI genuine parts.**
- **In the following situations, recalibration of the front radar (DSBS II) will be necessary. Contact an authorized SUZUKI dealer or a qualified workshop for details.**
  - **When the front radar (DSBS II) is replaced**
  - **When the front bumper or the front grille has been replaced**

(Continued)

⚠ WARNING

(Continued)

When installing the license plate on the front bumper

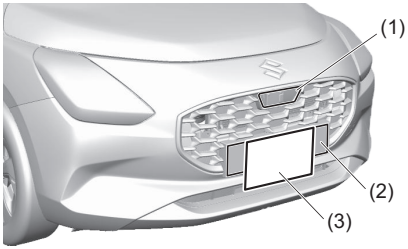

69T050600

(1) Front radar (DSBS II)
(2) Base plate
(3) License plate and license plate frame (sizes vary depending on the country and region)

- **The license plate and license plate frame (3) must be installed on the base plate (2).**
- **The front radar (DSBS II) (1) is positioned as shown in the illustration. If you do not install the license plate directly on the base plate (2), or install the license plate by protruding upwards from the base plate (2), emission/reception of the front radar (DSBS II) can be interrupted and the system may malfunction.**

(Continued)

⚠ WARNING

(Continued)

EXAMPLE

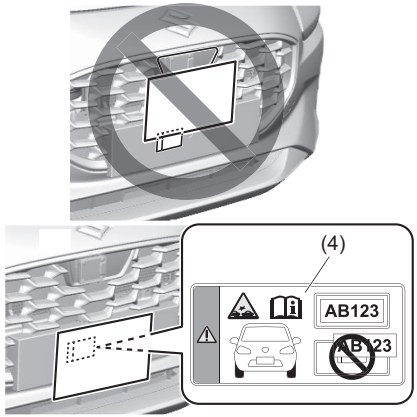

69T050600

- **Do not install the license plate and license plate frame (3) so that the warning label (4) is visible. Install them so that the warning label (4) is hidden. The license plate and license plate frame (3) must be installed securely on the base plate (2) by using self-tapping screws.**
- **We recommend you to ask your authorized SUZUKI dealer to install the license plate.**

NOTE:

Situations in which the front camera (DSBS II) and front radar (DSBS II) may not operate properly

- *When the height or inclination of the vehicle has been changed due to modifications*
- *When the windshield is dirty, fogged up, cracked or damaged*
- *When a sensor is extremely hot or cold*
- *When mud, water, snow, dead insects, foreign matter, etc., is attached to the front of the sensor*
- *When in inclement weather such as heavy rain, fog, snow, or a sandstorm*
- *When water, snow, dust, etc. is thrown up in front of the vehicle, or when driving through mist or smoke*
- *When the headlights are not illuminated while driving in the dark, such as at night or when in a tunnel*
- *When the lens of a headlight is dirty and illumination is weak*
- *When the headlights are misaligned*
- *When a headlight is malfunctioning*
- *When the headlights of another vehicle, sunlight, or reflected light shines directly into the front camera (DSBS II)*
- *When the brightness of the surrounding area changes suddenly*
- *When driving near a TV tower, broadcasting station, electric power plant, radar equipped vehicle, etc., or other location where strong radio waves or electrical noise may be present*

- *When a wiper blade is blocking the front camera (DSBS II)*
- *When in a location or near objects which strongly reflect radio waves, such as the following:*
  - *Tunnels*
  - *Truss bridges*
  - *Gravel roads*
  - *Rutted, snow-covered roads*
  - *Walls*
  - *Large trucks*
  - *Manhole covers*
  - *Metal plates*
  - *Guardrail*
- *When near a step or protrusion*
- *When a detectable vehicle is narrow, such as a small mobility vehicle*
- *When a detectable vehicle has a small front or rear end, such as an unloaded truck*

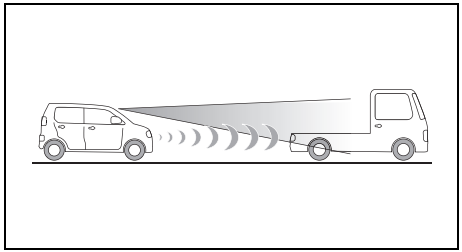

69TJ050010

- *When a detectable vehicle has a low front or rear end, such as a low bed trailer*

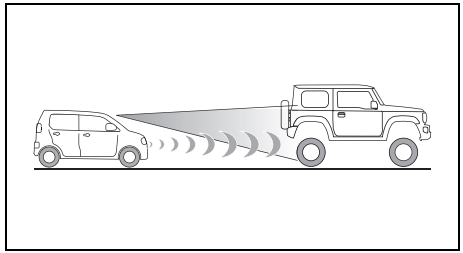

69TJ050080

- *When a detectable vehicle has extremely high ground clearance*
- *When a detectable vehicle is carrying a load which protrudes from its cargo area*
- *When a detectable vehicle has little exposed metal, such as a vehicle which is partially covered with cloth, etc.*
- *When a detectable vehicle is irregularly shaped, such as a tractor, sidecar, etc.*
- *When the distance between the vehicle and a detectable vehicle has become extremely short*
- *When a detectable vehicle is at an angle*
- *When a large amount of snow, mud, etc. is attached to a detectable vehicle*
- *When driving on the following kinds of roads:*
  - *Roads with sharp curves or winding roads*
  - *Roads with changes in grade, such as sudden inclines or declines*
  - *Roads which are sloped to the left or right*
  - *Roads with deep ruts*
  - *Roads which are rough and unmaintained*
  - *Roads which frequently undulate or are bumpy*
- *When the steering wheel is being operated frequently or suddenly*
- *When the vehicle is not in a constant position within a lane*
- *When parts related to this system, the brakes, etc. are extremely hot or cold, wet, etc.*
- *When the wheels are misaligned*
- *When driving on slick road surfaces, such as when it is covered with ice, snow, gravel, etc.*
- *When the course of the vehicle differs from the shape of a curve*
- *When the vehicle speed is excessively high when entering a curve*
- *When entering/exiting a parking lot, garage, car elevator, etc.*
- *When driving in a parking lot*
- *When driving through an area where there are obstructions which may contact your vehicle, such as tall grass, tree branches, a curtain, etc.*
- *When the wind is strong*

Situations in which the lane may not be detected

- *When the lane is extremely wide or narrow*
- *Immediately after changing lanes or passing through an intersection*
- *When driving in a temporary lane or lane regulated by construction*

- *When there are structures, patterns, shadows which are similar to lane lines in the surrounding*
- *When the lane lines are not clear or driving on a wet road surface*
- *When a lane line is on a curb*
- *When driving on a bright, reflective road surface, such as concrete*

Situations in which some or all of the functions of the system cannot operate

- *When a malfunction is detected in this system or a related system, such as the brakes, steering, etc.*
- *When the ESP® or other safety related system is operating*
- *When the ESP® or other safety related system is off*

Changes in brake operation sound and pedal response

- *When the brakes have been operated, brake operation sounds may be heard and the brake pedal response may change, but this does not indicate a malfunction.*
- *When the system is operating, the brake pedal may feel stiffer than expected or sink. In either situation the brake pedal can be depressed further. Further depress the brake pedal as necessary.*

Temporary stop or failure of the dual sensor
The following chart shows the temporary stop or failure of the dual sensor.

	Instrument cluster	Information display message	Dual sensor	
			Temporary stop	Failure
(1)	OFF	–	On	
(2)		–	On	
(3)		–	On	
(4)		–	On	
(5)	A	–	On	
(6)	OFF	–	On	
(7)	–	“DSBS II SYSTEM STOPPED”	On	Off
(8)	–	“DSBS II SYSTEM DISABLED”	Off	On
(9)		–	Blinks	

(1) Dual Sensor Brake Support II (DSBS II) OFF indicator light
(2) Lane departure prevention indicator light
(3) Lane keep assist indicator light
(4) Adaptive cruise control indicator light
(5) High beam assist warning light (orange)
(6) Traffic sign recognition OFF indicator light
(7) Indication of information display
(8) Indication of information display
(9) Master warning indicator

The message may be shown in the following situations:
- When driving the vehicle on a dark road without street lamps
- When driving the vehicle on a steep slope
- When trying to stop the vehicle in a garage
- When slowly approaching forward to an unicolor wall
- When slowly approaching forward to a shutter or a horizontal-striped wall

NOTE:
When the function of the dual sensor is temporarily stopped or malfunctioning, the following functions will be turned off.

- *Dual Sensor Brake Support II (DSBS II)*
- *Lane departure prevention system*
- *Lane keep assist*
- *Vehicle swaying warning*
- *High beam assist*
- *Adaptive cruise control*
- *Adaptive cruise control*
  (with following function for all speeds)
- *Traffic sign recognition*

Temporary stop of the dual sensor
Under the following situations, the function of the dual sensor stops temporarily.
When the situations are improved, the temporary stop of the function will be canceled.

Message	Cause	Remedy
“DSBS II SYSTEM STOPPED”	Under the following situations, the function of the dual sensor stops temporarily. • When the systems related to SUZUKI SAFETY SUPPORT stop temporarily • When the lead-acid battery has a voltage abnormality • When the automatic adjustment of the dual sensor is insufficient	Drive with caution until the cause is resolved. If the message remains on the information display after a while, consult with an authorized SUZUKI dealer or a qualified workshop.
“F CAMERA STOPPED (TEMP)”	Since the temperature of the body of front camera (DSBS II) is low or high, the function of the dual sensor stops temporarily.	• Drive with caution until the cause is resolved. • If the message remains on the information display after a while, consult with an authorized SUZUKI dealer or a qualified workshop. • If the front camera (DSBS II) is hot, such as after the vehicle is parked in the sun, use the air conditioning system to decrease the temperature around the front camera (DSBS II). • If the front camera (DSBS II) is cold, such after the vehicle is parked in an extremely cold environment, use the air conditioning system to increase the temperature around the front camera (DSBS II)
“F CAMERA STOPPED (LOW VIS)”	The dual sensor functions are temporarily stopped, because visibility from the front camera (DSBS II) is poor. Possible reasons are as follows • When there is bad weather such as heavy rain, fog or a blizzard • When the windshield in front of the front camera (DSBS II) is covered with dirt or foreign material • When the windshield in front of the front camera (DSBS II) is fogged up	Use the windshield wiper in bad weather. If the temporary stop of function is not canceled even if the windshield wiper is used, wait for the weather to improve. • Using the windshield wipers, remove the dirt or foreign material from the windshield. • Using the air conditioning system, defog the windshield. • Close the hood, remove any stickers, etc. to avoid blocking view of the front camera (DSBS II).

Message	Cause	Remedy
“CLEAN EXTERNAL RADAR”	The function of the system stops temporarily due to failure of radar. Possible reason is as follows. • When the surrounding areas of radar is covered with dirt, oil film or raindrops	Wipe off dirt, oil film and raindrops from the surrounding areas of radar with a soft cloth.
“F RADAR STOPPED (TEMP)”	Since the temperature of the body of front radar (DSBS II) is low or high, the function of the system stops temporarily.	Drive with caution until the cause is resolved. If the message remains on the information display after a while, consult with an authorized SUZUKI dealer or a qualified workshop.
“F RADAR STOPPED (CALIB)”	The function of the system stops temporarily due to bad angle of the front radar (DSBS II).	• If the message remains on the information display after a while, consult with an authorized SUZUKI dealer or a qualified workshop. • Check if there is any foreign material attached to the front radar (DSBS II) or front radar cover and clean them if necessary.

Dual Sensor Brake Support II (DSBS II)

The Dual Sensor Brake Support II (DSBS II) uses sensors to detect objects in the path of the vehicle. When the system determines that the possibility of a frontal collision with a detectable object is high, a warning operates to urge the driver to take evasive action. If the system determines that the possibility of a collision is extremely high, the brakes are automatically applied to help avoid the collision or help reduce the impact of the collision.
The Dual Sensor Brake Support II (DSBS II) can be disabled/enabled and the warning timing can be changed. Refer to “Dual Sensor Brake Support II (DSBS II) OFF switch” (P.5-79).

⚠ WARNING

For safe use

- **Driving safely is solely the responsibility of the driver. Pay careful attention to the surrounding conditions in order to ensure safe driving. Never use the Dual Sensor Brake Support II (DSBS II) in place of normal braking operations. This system cannot help avoid or reduce the impact of a collision in every situation. Over-reliance on this system to drive the vehicle safely may lead to an accident resulting in death or serious injury.**
- **Although the Dual Sensor Brake Support II (DSBS II) is designed to help avoid or help reduce the impact of a collision, its effectiveness may change according to various conditions. Therefore, it may not always be able to achieve the same level of performance. Read the following items carefully. Do not overly rely on this system and always drive carefully.**
  - **Refer to “For safe use” (P.5-59) in this section.**

(Continued)

⚠ WARNING

(Continued)

When to disable the Dual Sensor Brake Support II (DSBS II)

- **Refer to “When it is necessary to disable the system” (P.5-59) in this section.**

Detectable objects

The system can detect the following as detectable objects. (Detectable objects differ depending on the function.)

- Vehicles
- Bicycles*1
- Pedestrians
- Motorcycles*1

*1: Detected as a detectable object only when being ridden.

System functions

• Frontal collision warning

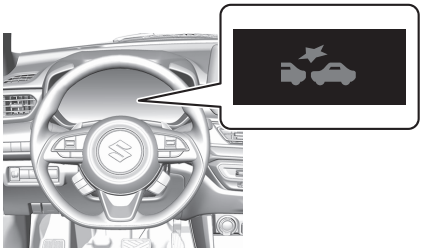

69T050030

"DUAL SENSOR BRAKE SUPPORT"

When the system determines that the possibility of a collision is high, a buzzer will sound and an image and warning message will be displayed on the information display to urge the driver to take evasive action.

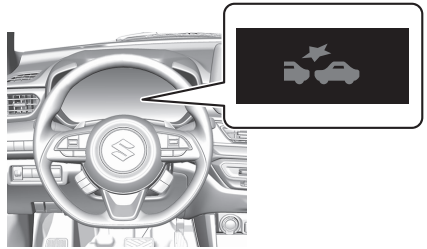

69T050030

"ACCELERATOR PEDAL IS PRESSED"

If the system determines that the accelerator pedal is strongly depressed, the above image and message will be displayed on the information display.

• Brake assist system

If the system determines that the possibility of a collision is high and the brake operation by the driver is insufficient, the braking power will be increased.

• Automatic brake system

If the system determines that the possibility of a collision is extremely high, the brakes are automatically applied to help avoid the collision or reduce the impact of the collision.

• Intersection collision avoidance support (left/right turn)

In situations such as the following, if the system determines that the possibility of a collision is high, the frontal collision warning and the automatic brake system will operate. Depending on the intersection, assistance may not operate correctly.

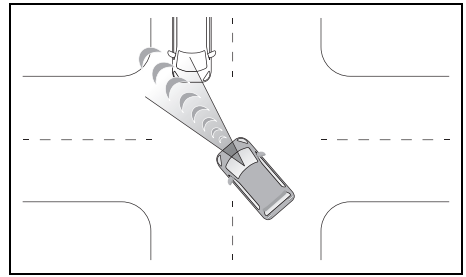

69T050050

- When turning left/right at an intersection and crossing the path of an oncoming vehicle

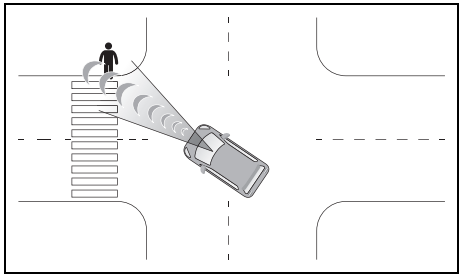

69T050060

- When turning left/right at an intersection and crossing an oncoming pedestrian or bicycle is detected

• Intersection collision avoidance support (crossing vehicles)

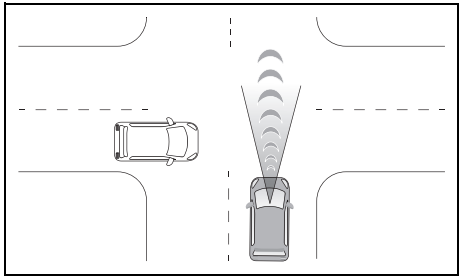

69T050070

At an intersection, etc., if the system determines that the possibility of a collision with an approaching vehicle is high, the frontal collision warning and the automatic brake system will operate. Depending on the intersection, assistance may not operate correctly.

⚠ WARNING

Automatic brake system

- **When the automatic brake system function is operating, a large amount of braking force will be applied.**
- **If the vehicle is stopped by automatic brake system function, the driver should operate the brakes as necessary.**
- **In the following situations, brake hold will not operate after the automatic brake system function has operated. Depending on the situation, the driver should operate the brake pedal immediately.**
  - **When the accelerator pedal is depressed**
  - **When the vehicle is stopped by intersection collision avoidance support**
  - **When the vehicle is stopped on a steep slope**

(Continued)

⚠ WARNING

(Continued)

- **The automatic brake system function may not operate if certain operations are performed by the driver. If the accelerator pedal is being depressed strongly or the steering wheel is being turned, the system may determine that the driver is taking evasive action and the automatic brake system function may not operate or may be deactivated.**
- **If the brake pedal is being depressed, the system may determine that the driver is taking evasive action and possibly delay the operation timing of the automatic brake system.**

NOTE:

Operating conditions of each function of the Dual Sensor Brake Support II (DSBS II)

The Dual Sensor Brake Support II (DSBS II) is enabled and the system determines that the possibility of a frontal collision with a detected object is high, the system will operate.

However, the system will not operate in the following situations:

- *When the vehicle has not been driven a certain amount after a terminal of the 12-volt battery has been disconnected and reconnected*
- *When the gearshift lever is in "R" position*
- *When the ESP® OFF indicator is illuminated (only the frontal collision warning function will be operational)*

The following are the operational speeds and cancelation conditions of each function:

- *Frontal collision warning*

Detectable objects	Vehicle speed	Relative speed between your vehicle and object
Preceding vehicles, stopped vehicles	Approximately 5 to 180 km/h (3 to 112 mph)	Approximately 5 to 180 km/h (3 to 112 mph)
Oncoming vehicles	Approximately 30 to 180 km/h (19 to 112 mph)	Approximately 80 to 220 km/h (50 to 137 mph)
Bicycles	Approximately 5 to 80 km/h (3 to 50 mph)	Approximately 5 to 80 km/h (3 to 50 mph)
Pedestrians	Approximately 5 to 80 km/h (3 to 50 mph)	Approximately 5 to 80 km/h (3 to 50 mph)
Preceding motorcycles, stopped motorcycles	Approximately 5 to 180 km/h (3 to 112 mph)	Approximately 5 to 80 km/h (3 to 50 mph)
Oncoming motorcycles	Approximately 30 to 180 km/h (19 to 112 mph)	Approximately 30 to 180 km/h (19 to 112 mph)

While the frontal collision warning is operating, if the steering wheel is operated heavily or suddenly, the frontal collision warning may be canceled.

- *Brake assist system*

Detectable objects	Vehicle speed	Relative speed between your vehicle and object
Preceding vehicles, stopped vehicles	Approximately 30 to 180 km/h (19 to 112 mph)	Approximately 10 to 180 km/h (6 to 112 mph)
Bicycles	Approximately 30 to 80 km/h (19 to 50 mph)	Approximately 30 to 80 km/h (19 to 50 mph)
Pedestrians	Approximately 30 to 80 km/h (19 to 50 mph)	Approximately 30 to 80 km/h (19 to 50 mph)
Preceding motorcycles, stopped motorcycles	Approximately 30 to 180 km/h (19 to 112 mph)	Approximately 10 to 80 km/h (6 to 50 mph)

- *Automatic brake system*

Detectable objects	Vehicle speed	Relative speed between your vehicle and object
Preceding vehicles, stopped vehicles	Approximately 5 to 180 km/h (3 to 112 mph)	Approximately 5 to 180 km/h (3 to 112 mph)
Oncoming vehicles	Approximately 30 to 180 km/h (19 to 112 mph)	Approximately 80 to 220 km/h (50 to 137 mph)
Bicycles	Approximately 5 to 80 km/h (3 to 50 mph)	Approximately 5 to 80 km/h (3 to 50 mph)
Pedestrians	Approximately 5 to 80 km/h (3 to 50 mph)	Approximately 5 to 80 km/h (3 to 50 mph)
Preceding motorcycles, stopped motorcycles	Approximately 5 to 180 km/h (3 to 112 mph)	Approximately 5 to 80 km/h (3 to 50 mph)
Oncoming motorcycles	Approximately 30 to 180 km/h (19 to 112 mph)	Approximately 30 to 180 km/h (19 to 112 mph)

If either of the following occur while the automatic brake system function is operating, it will be canceled:
- *The accelerator pedal is strongly depressed*
- *The steering wheel is operated heavily or suddenly*

- *Intersection collision avoidance support (left/right turn)*
  The intersection collision avoidance support (for left/right turning vehicles) will not operate when the turn signal lights are not flashing.

Detectable objects	**Vehicle speed**	**Oncoming vehicle speed**	**Relative speed between your vehicle and object**
Oncoming vehicles	Approximately 5 to 40 km/h (3 to 25 mph)	Approximately 5 to 75 km/h (3 to 47 mph)	Approximately 10 to 115 km/h (6 to 71 mph)
Pedestrians	Approximately 5 to 30 km/h (3 to 19 mph)	_	Approximately 5 to 40 km/h (3 to 25 mph)
Bicycles	Approximately 5 to 30 km/h (3 to 19 mph)	_	Approximately 5 to 50 km/h (3 to 31 mph)
Oncoming motorcycles	Approximately 5 to 40 km/h (3 to 25 mph)	Approximately 5 to 75 km/h (3 to 47 mph)	Approximately 10 to 115 km/h (6 to 71 mph)

- *Intersection collision avoidance support (crossing vehicles)*

Detectable objects	**Vehicle speed**	**Crossing vehicle speed**	**Relative speed between your vehicle and object**
Vehicles (side)	Approximately 5 to 60 km/h (3 to 37 mph)	• Your vehicle speed or less • Approximately 40 km/h or less (25 mph or less)	Approximately 5 to 60 km/h (3 to 37 mph)

NOTE:
Detection of detectable objects

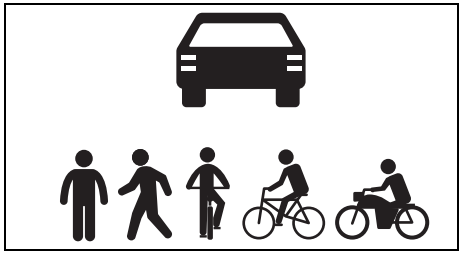

69TJ050080

Objects are detected based on their size, shape, and movement. Depending on the ambient brightness, movement, posture and direction of a detectable object, it may not be detected and the system may not operate properly. The system detects shapes, such as the following, as detectable objects.

Situations in which the system may operate even though the possibility of a collision is not high

- *In certain situations, such as the following, the system may determine that the possibility of a collision is high and operate:*
  - *When passing a detectable object*
  - *When changing lanes while overtaking a detectable object*
  - *When suddenly approaching a detectable object*
  - *When approaching a detectable object or other object on the roadside, such as guardrails, utility poles, trees, walls, etc.*

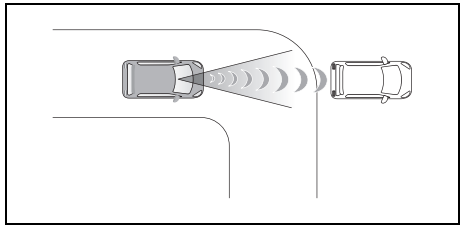

69TJ050090

  - *When there is a detectable object or other object by the roadside at the entrance of a curve*
  - *When there are patterns or a painting ahead of the vehicle that may be mistaken for a detectable object*

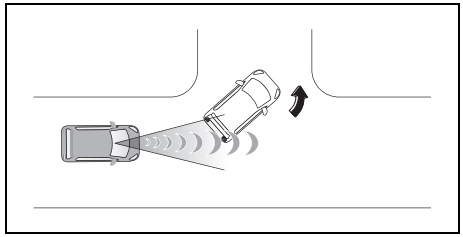

69TJ050100

  - *When passing a detectable object that is changing lanes or turning left/right*

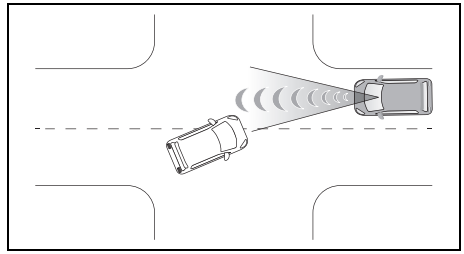

69T050110

  - *When passing a detectable object which is stopped to make a left/right turn*
  - *When a detectable object stops immediately before entering the path of the vehicle*

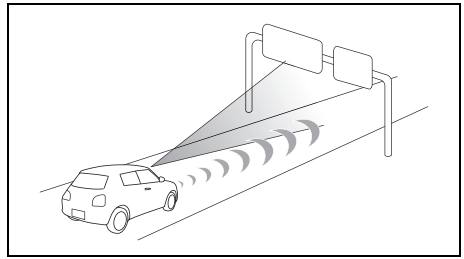

69TJ050120

  - *When passing through a location with a structure above the road (traffic sign, billboard, etc.)*
  - *When approaching an electric toll gate barrier, parking lot barrier, or other barrier that opens and closes*

– *When turning left/right and an oncoming vehicle or pedestrian crosses in front of the vehicle*
– *When attempting to turn left/right in front of an oncoming vehicle or pedestrian*
– *When turning left/right and an oncoming vehicle or pedestrian stops immediately before entering the path of the vehicle*

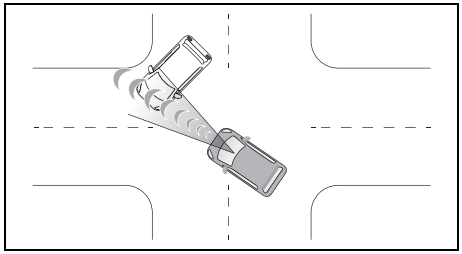

69T050130

– *When turning left/right and an oncoming vehicle turns left/right in front of the vehicle*
– *When the steering wheel is operated toward the path of an oncoming vehicle*

Situations in which the system may not operate properly

- *In certain situations, such as the following, a detectable object may not be detected by the front sensors, and the system may not operate properly:*

– *When a detectable object is approaching your vehicle*
– *When your vehicle or a detectable object is wandering*
– *When a detectable object makes an abrupt maneuver (such as sudden swerving, acceleration or deceleration)*
– *When suddenly approaching a detectable object*
– *When the detectable object is near a wall, fence, guardrail, manhole cover, steel plate on the road surface, or another vehicle*
– *When there is a structure above a detectable object*
– *When part of a detectable object is hidden by another object (large luggage, umbrella, guardrail, etc.)*
– *When multiple detectable objects are overlapping*
– *When a bright light, such as the sun, is reflecting off of a detectable object*
– *When a detectable object is white and looks extremely bright*
– *When the color or brightness of a detectable object causes it to blend in with its surroundings*
– *When a detectable object cuts in front of or suddenly emerges in front of your vehicle*
– *When approaching a vehicle which is diagonal*
– *If a vehicle ahead is a child sized bicycle, is carrying a large load, is carrying an extra passenger, or has an unusual shape (bicycles equipped with a child seat, tandem bicycles, etc.)*
– *If a pedestrian or bicycle is shorter than approximately 1 m (3.3 ft.) or taller than approximately 2 m (6.6 ft.).*
– *When the silhouette of a pedestrian or bicycle is unclear (such as when they are wearing a raincoat, long skirt, etc.)*
– *When a pedestrian or bicycle is bending forward or squatting*
– *When a pedestrian or bicycle is moving at high speed*
– *When a pedestrian is pushing a stroller, wheelchair, bicycle or other vehicle*
– *When a detectable object blends in with the surrounding area, such as when it is dim (at dawn or dusk) or dark (at night or in a tunnel)*
– *When the vehicle has not been driven for a certain amount of time after the engine was started*
– *While turning left/right or a few seconds after turning left/right*
– *While driving around a curve and a few seconds after driving around a curve*
– *When turning left/right and an oncoming vehicle is driving in a lane 3 or more lanes from the vehicle*

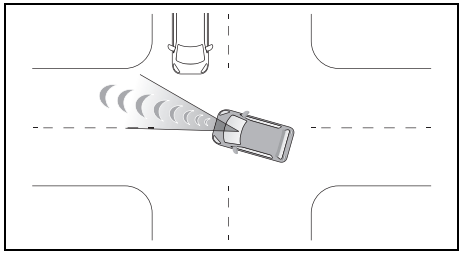

69T050140

– *When turning left/right and the direction of the vehicle differs greatly from the direction traffic flows in the oncoming lane*

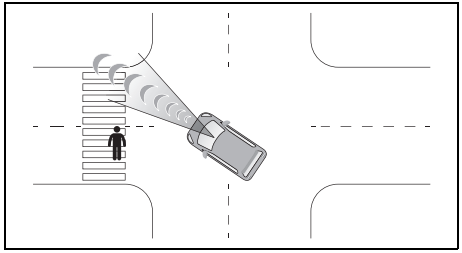

69T050150

– *When turning left/right and approaching a pedestrian who was traveling in the same direction as the vehicle and continues straight*

Dual Sensor Brake Support II (DSBS II) OFF switch

You can turn off the Dual Sensor Brake Support II (DSBS II).

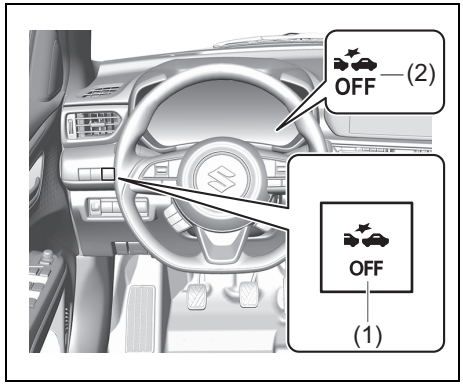

69T050630

- When you want to turn off the system, push and hold the Dual Sensor Brake Support II (DSBS II) OFF switch (1) until the interior buzzer beeps and the Dual Sensor Brake Support II (DSBS II) OFF indicator light (2) comes on.
- When you want to turn the system back on, push the Dual Sensor Brake Support II (DSBS II) OFF switch (1), the interior buzzer beeps and the Dual Sensor Brake Support II (DSBS II) OFF indicator light (2) goes off.
- Every time you turn off the engine, the system will turn back on and the Dual Sensor Brake Support II (DSBS II) OFF indicator light (2) will go off.
- Every time you push the Dual Sensor Brake Support II (DSBS II) OFF switch (1), the interior buzzer will beep to inform you of the system's activation or deactivation.

Changing the Dual Sensor Brake Support II (DSBS II) setting

The Dual Sensor Brake Support II (DSBS II) setting can be changed through the information display setting mode*1. For details, refer to “Setting mode of information display” (P.12-8). The system is enabled each time the engine switch is pressed to change the ignition mode to ON.

- When the adaptive cruise control is operating, the frontal collision warning will operate at the [Earlier] timing, regardless of the user setting.

*1: The items you can change depend on the vehicle's specifications.

Lane departure prevention

Basic functions

The lane departure prevention system warns the driver if the vehicle may deviate from the current lane or course*1, and also can slightly operate the steering wheel to help avoid deviation from the lane or course*1.

The front camera (DSBS II) is used to detect lane lines or a course*1.

*1: Boundary between the asphalt and grass, soil, etc., or structures, such as a curb, guardrail, etc.

Lane departure warning

When the system determines that the vehicle might depart from its lane or course*1, the lane departure prevention indicator light will blink and a warning buzzer will sound or the steering wheel will vibrate to alert the driver.

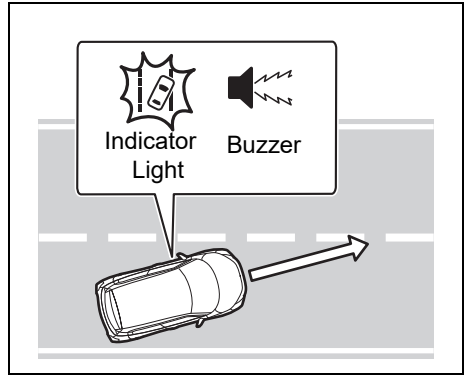

69T050640

Check the area around your vehicle and carefully operate the steering wheel to move the vehicle back to the center of the lane or course*1.

*1: Boundary between the asphalt and grass, soil, etc., or structures, such as a curb, guardrail, etc.

Lane departure prevention

If the system determines that the vehicle is likely to depart from its lane or course*1, it provides assistance through steering wheel operations to help avoid deviation from the lane or course.

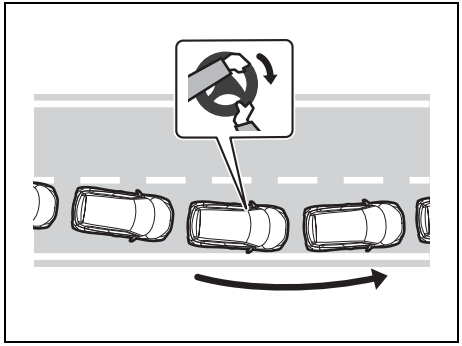

69T050650

If the system determines that the steering wheel has not been operated for a certain amount of time or the steering wheel is not being firmly gripped, a warning message may be displayed and a warning buzzer may sound to alert the driver.

*1: Boundary between the asphalt and grass, soil, etc., or structures, such as a curb, guardrail, etc.

Vehicle swaying warning

If the vehicle is swaying, the lane departure prevention indicator light will blink and a warning buzzer will sound to urge the driver to take a break.

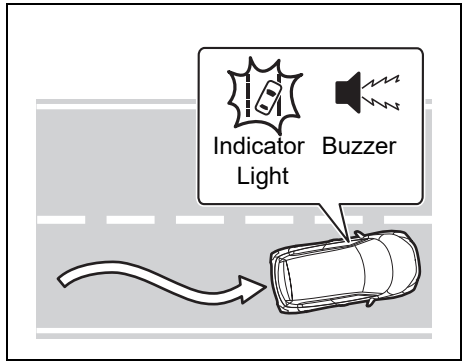

69T050660

⚠ WARNING

<u>Before using the lane departure prevention system</u>

- **Do not overly rely on the lane departure prevention system. The lane departure prevention system is a system which provides automated assistance in driving. However, as it is not a system which reduces the amount of attention necessary for safe driving. The driver is solely responsible for paying attention to their surroundings and operating the steering wheel as necessary to ensure safety. Also, the driver is responsible for taking adequate breaks when fatigued, such as when driving for a long time.**
- **Failure to perform appropriate driving operations and pay careful attention may lead to an accident.**

NOTE:

Operating conditions of each function

- *Lane departure warning/prevention function*
  This function is operable when all of the following conditions are met:
  - *The vehicle speed is approximately 50 km/h (31 mph) or more.*
    Operation may be possible when the vehicle speed is approximately 40 km/h (25 mph) or more if vehicles, motorcycles, bicycles, or pedestrians are detected near the lane.
  - *The system recognizes a lane or course*2. (When recognized on only one side*2, the system will operate only for the recognized side.)*
  - *The lane width is approximately 3 m (9.8 ft.) or more. If the lane width is narrow, the lane departure warning and the lane departure prevention function may not work against line.*
  - *The turn signal control lever is not being operated.*
  - *The vehicle is not being driven around a sharp curve.*
  - *The vehicle is not accelerating or decelerating more than a certain amount.*
  - *The steering wheel is not being turned sufficiently to perform a lane change.*

2: Boundary between the asphalt and grass, soil, etc., or structures, such as a curb, guardrail, etc.

- *Vehicle swaying warning*
  This function is operable when all of the following conditions are met:
  - *The vehicle speed is approximately 50 km/h (31 mph) or more.*
  - *The lane width is approximately 3 m (9.8 ft.) or more.*

Temporary cancellation of functions

When the operating conditions are no longer met, a function may be temporarily canceled. However, when the operation conditions are met again, operation of the function will automatically be restored.

Operation of the lane departure warning function/lane departure prevention function

- *Depending on the vehicle speed, road conditions, lane departure angle, etc., operation of the lane departure prevention function may not be felt or the function may not operate.*
- *Depending on the conditions, the warning buzzer may operate even if vibration is selected through a customize setting.*
- *If a course*2 is not clear or straight, the lane departure alert function or lane departure prevention function may not operate.*
- *The lane departure warning function or lane departure prevention function may not operate if the system judges that the vehicle is intentionally being steered to avoid a pedestrian or parked vehicle.*
- *The steering assist operation of the lane departure prevention function can be overridden by the steering wheel operation of the driver.*

2: Boundary between the asphalt and grass, soil, etc., or structures, such as a curb, guardrail, etc.

Hands off steering wheel warning

69T050810

"KEEP CONTROL OF STEERING WHEEL"

In the following situations, a message urging the driver to operate the steering wheel and an image will be displayed and a buzzer will sound to warn the driver. When using the system, make sure to grip the steering wheel firmly, regardless of whether the warning is operating or not.

- *When the system determines that the driver is not securely holding the steering wheel, or the steering wheel is not being operated when the steering assist operation of the lane departure prevention function is operating.*
  The length of time that the warning buzzer operates will become longer as the frequency of the steering assist operating increases. Even if the system judges that the steering wheel has been operated, the warning buzzer will sound for a certain amount of time.

Vehicle swaying warning

69T040280

"VEHICLE SWAYING DETECTED"

If the vehicle is swaying, a message will be displayed and a warning buzzer will sound to urge the driver to take a break.

Depending on the condition of the vehicle and road surface, the vehicle swaying warning function may not operate.

Lane departure prevention OFF switch

You can turn off the lane departure prevention, lane departure warning and the vehicle swaying warning.

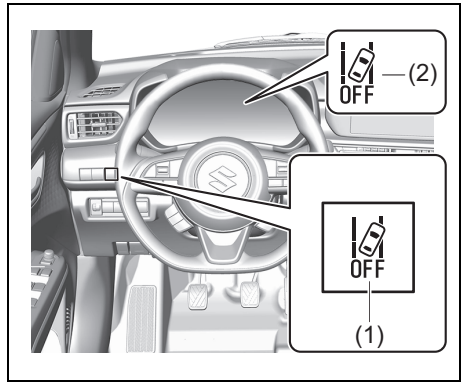

69T050670

- When you want to turn off the system, push and hold the lane departure prevention OFF switch (1) until the interior buzzer beeps and the lane departure prevention OFF indicator light (2) comes on.

Perform the following method to turn the system back on.

- Push the lane departure prevention OFF switch (1), the interior buzzer beeps and the lane departure prevention OFF indicator light (2) goes off.

⚠ WARNING

If you attempt to press the lane departure prevention OFF switch while driving, you could lose control of the vehicle.
Do not press the lane departure prevention OFF switch while driving.

Changing Lane Departure Prevention setting

The settings of the lane departure prevention can be changed through the information display setting mode. For details, refer to “Setting mode of information display” (P.12-8).

⚠ WARNING

Situations in which the lane departure prevention should not be used

Refer to “When it is necessary to disable the system” (P.5-59) in this section and disable the system. Failure to do so may lead to an accident.

Situations in which the system may not operate properly

In the following situations, the system may not operate properly and the vehicle may depart from its lane. Do not overly rely on these functions. The driver is solely responsible for paying attention to their surroundings and operating the steering wheel as necessary to ensure safety.

- **When the boundary between the asphalt and grass, soil, etc., or structures, such as a curb, guardrail, etc. is not clear or straight**

(Continued)

⚠ WARNING

(Continued)

- **When the vehicle is struck by a crosswind or the turbulence of other nearby vehicles**
- **Situations in which the lane may not be detected: Refer to “Situations in which the lane may not be detected” (P.5-65) in this section.**
- **Situations in which the sensors may not operate properly: Refer to “Situations in which the front camera (DSBS II) and front radar (DSBS II) may not operate properly” (P.5-64) in this section.**
- **Situations in which some or all of the functions of the system cannot operate: Refer to “Situations in which some or all of the functions of the system cannot operate” (P.5-66) in this section.**

Displays and system operation

The operating state of the lane departure warning function and steering assist operation of the lane departure prevention function are indicated.

Indicator	Information display		Situation
	Lane	Steering	
OFF On (orange)	Off	Off	System disabled
On (white)	On (white outline)	Off	Lane lines are not detected by the system
On (white)	On (white)	Off	Lane lines are detected by the system
Blinks (orange)	Blinks (orange)	Off	Lane departure warning function is operating for the side which the lane display is blinking

Indicator	Information display		Situation
	Lane	Steering	
On (green)	On (green)	On (green)	Lane departure prevention function is operating for the side which the lane display is illuminated
Blinks (orange)	Blinks (orange)	On (green)	Lane departure warning function/lane departure prevention function is operating for the side which the lane display is blinking
On (orange)	Off	Off	When the engine switch is pressed to change the ignition mode to ON, this light comes on briefly so you can check that the light is working. If there is a problem in the lane departure prevention with the engine switch in ON mode, this light will come on by orange. Bring the vehicle to an authorized SUZUKI dealer or a qualified workshop to have the problem corrected.

Lane keep assist

Lane keep assist functions

- When driving on a road with clear lane lines with the adaptive cruise control operating, lane lines and preceding and surrounding vehicles are detected using the front camera (DSBS II) and radar sensor, and the steering wheel is operated to maintain the vehicle's lane position.

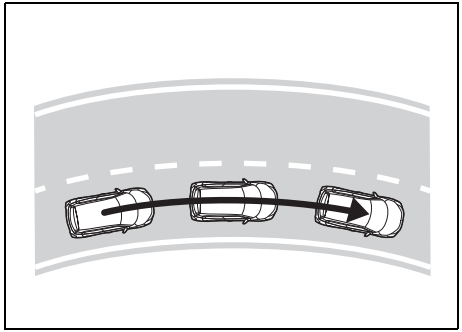

69T050680

Use the function only on highways and expressways.
If the adaptive cruise control is not operating, the function will not operate.
Refer to “Adaptive cruise control (if equipped)” (P.5-98) or “Adaptive cruise control (with following function for all speeds)” (P.5-110).
In situations where the lane lines are difficult to see or are not visible, such as when in a traffic jam, support will be provided using the path of preceding and surrounding vehicles.
If the system determines that the steering wheel has not been operated for a certain amount of time or the steering wheel is not being firmly gripped, the driver will be alerted via a display and this function will be temporarily canceled.
If the function is deactivated, use the lane keep assist ON/OFF switch to turn on the system.

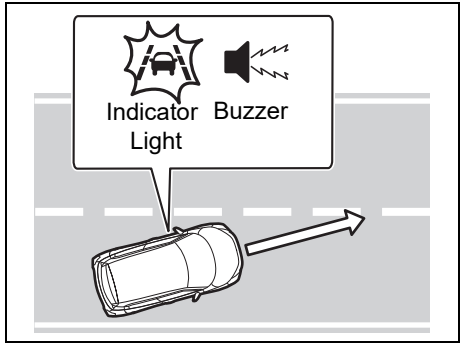

69T050950

- When the function is operating, if the vehicle is likely to depart from its lane, the driver will be alerted via a display and buzzer.
- When the buzzer sounds, check the area around the vehicle and carefully operate the steering wheel to move the vehicle back to the center of the lane.

⚠ WARNING

Before using the lane keep assist system

- **Do not overly rely on the lane keep assist system. The lane keep assist system is a system which provides automated assistance in driving. However, as it is not a system which reduces the amount of attention necessary for safe driving. The driver is solely responsible for paying attention to their surroundings and operating the steering wheel as necessary to ensure safety. Also, the driver is responsible for taking adequate breaks when fatigued, such as when driving for a long time.**
- **Failure to perform appropriate driving operations and pay careful attention may lead to an accident.**
- **When not using the lane keep assist system, turn it off using the lane keep assist ON/OFF switch.**

NOTE:

Operating conditions of function

- *This function is operable when all of the following conditions are met:*
  - *The lane keep assist system detects lane lines or the path of preceding or surrounding vehicles (except when the preceding vehicle is small, such as a motorcycle).*
  - *The adaptive cruise control is operating.*
  - *The lane width is approximately 3 to 4 m (10 to 13 ft.).*
  - *The turn signal control lever is not being operated.*
  - *The vehicle is not being driven around a sharp curve.*
  - *The vehicle is not accelerating or decelerating more than a certain amount.*
  - *The steering wheel is not being turned with a large force.*
  - *The hands off steering wheel warning is not operating. Refer to "Hands off steering wheel warning" in this NOTE.*
  - *The vehicle is being driven in the center of a lane.*

Temporary cancelation of functions

- *When the operating conditions are no longer met, a function may be temporarily canceled. However, when the operation conditions are met again, operation of the function will automatically be restored. Refer to "Operating conditions of function" in this NOTE.*
- *If the operating conditions of a function are no longer met while the function is operating, a buzzer may sound to indicate that the function has been temporarily canceled.*
- *The steering assist operation of the function can be overridden by the steering wheel operation of the driver.*

Lane departure warning function when the lane keep assist is operating

- *Even if the warning method of the lane departure warning is changed to vibration of the steering wheel, if the vehicle deviates from the lane while the lane keep assist is operating, the warning buzzer will sound to alert the driver.*
- *If steering wheel operation equivalent to that necessary for a lane change is detected, the system will determine the vehicle is not deviating from the lane and the warning will not operate.*

Hands off steering wheel warning

EXAMPLE

69TJ040700

"KEEP CONTROL OF STEERING WHEEL"

In the following situations, a message urging the driver to grip the steering wheel and the image shown in the illustration will be displayed on the information display to warn the driver. If the system detects that the steering wheel is held, the warning will be canceled. When using the system, make sure to grip the steering wheel firmly, regardless of whether the warning is operating or not.

Refer to "Warning and indicator messages" (P.4-16).

- *When the system determines the driver is not holding the steering wheel while the function is operating*
  - *If no operations are detected for a certain amount of time, a buzzer will sound, the warning will operate, and the function will be canceled. This warning may also operate if the driver only operates steering wheel a small amount continuously.*
- *Depending on the condition of the vehicle, handle control condition and road surface, the warning function may not operate.*

Lane keep assist ON/OFF switch

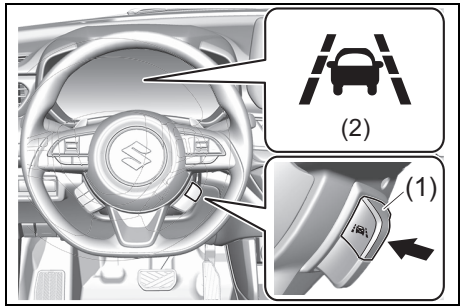

69T051150

(1) Lane keep assist ON/OFF switch
(2) Lane keep assist indicator light

- To turn on the lane keep assist, push the lane keep assist ON/OFF switch (1) in the arrow direction as shown in he illustration, and turn on the lane keep assist indicator light (2).
- To turn off the lane keep assist, push the lane keep assist ON/OFF switch (1) in the arrow direction again and turn off the lane keep assist indicator light (2).

⚠ WARNING

Situations in which the functions may not operate properly

In the following situations, the functions may not operate properly and the vehicle may depart from its lane. Do not overly rely on these functions. The driver is solely responsible for paying attention to their surroundings and operating the steering wheel as necessary to ensure safety.

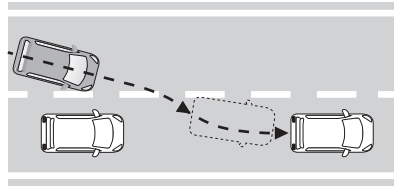

69TJ050190

- **When a preceding or surrounding vehicle changes lanes (Your vehicle may follow the preceding or surrounding vehicle and also change lanes)**

(Continued)

⚠ WARNING

(Continued)

- **When a preceding or surrounding vehicle is swaying (Your vehicle may sway accordingly and depart from the lane)**
- **When a preceding or surrounding vehicle departs from a lane (Your vehicle may follow the preceding or surrounding vehicle and also depart from the lane)**
- **When a preceding or surrounding vehicle is being driven extremely close to the left/right lane line (Your vehicle may follow the preceding or surrounding vehicle accordingly and depart from the lane)**
- **When there are moving objects or structures in the surrounding area (Depending on the position of the moving object or structure relative to your vehicle, your vehicle may sway)**
- **When the vehicle is struck by a crosswind or the turbulence of other nearby vehicles**
- **Situations in which the sensors may not operate properly: Refer to "Situations in which the front camera (DSBS II) and front radar (DSBS II) may not operate properly" (P.5-64) in this section.**

(Continued)

⚠ WARNING

(Continued)

- **Situations in which the lane may not be detected: Refer to "Situations in which the lane may not be detected" (P.5-65) in this section.**
- **When it is necessary to disable the system: Refer to "When it is necessary to disable the system" (P.5-59) in this section.**

Operation display of steering wheel operation support

The operating state of the lane keep assist system is indicated.

Indicator	Information display		Situation
	Lane	Steering	
On (White)	On (White outline)	On (white)	Lane keep assist is on standby
On (Green)	On (green)	On (green)	Lane keep assist is operating
Blinks (Orange)	Blinks (orange)	On (green)	The vehicle is departing the lane toward the side which the lane display is blinking
On (orange)	Off	Off	When the engine switch is pressed to change the ignition mode to ON, this light comes on briefly so you can check that the light is working. If there is a problem in the lane keep assist with the engine switch in ON mode, this light will come on by orange. Bring the vehicle to an authorized SUZUKI dealer or a qualified workshop to have the problem corrected.

High beam assist

The high beam assist uses a front camera (DSBS II) located on the upper portion of the windshield to detect the brightness of the lights of vehicles ahead, streetlights, etc., and automatically changes the head lights between the high beams and low beams.

⚠ WARNING

For safe use

Do not overly rely on the high beam assist. Always drive safely, taking care to observe your surroundings and turning the high beams on or off manually if necessary.

To prevent unintentional operation of the high beam assist System

When it is necessary to disable the system: Refer to "When it is necessary to disable the system" (P.5-59) in this section.

Using the high beam assist system

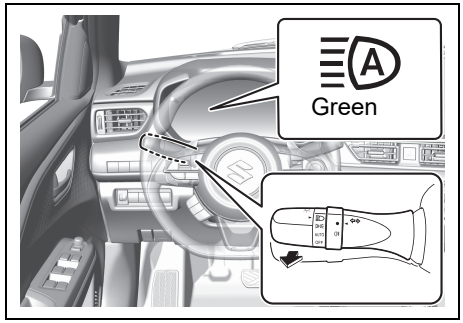

69T050690

- Set the knob of the lighting control lever to the "AUTO" position when the engine switch is in ON mode, the high beam assist indicator light (green) will come on.
- To disable the high beam assist, pull the lever toward you or change the lever position or the knob of the lighting control lever to other than the above. The high beam assist indicator light (green) will go off.

NOTE:

Automatic operating conditions of the high beams

- *When all of the following conditions are met, the high beams will illuminate automatically:*
  - *The vehicle speed is more than*
    -Type A: about 30 km/h (19 mph)
    -Type B: about 40 km/h (25 mph)
  - *The area ahead of the vehicle is dark.*
  - *There are no vehicles ahead with lights on.*
  - *There are few streetlights or other lights on the road ahead.*
- *If any of the following conditions are met, the headlights will change to the low beams:*
  - *The vehicle speed drops below*
    -Type A: about 25 km/h (16 mph)
    -Type B: about 30 km/h (19 mph)
  - *The area ahead of the vehicle is not dark.*
  - *There is a vehicle ahead with lights on.*
  - *There are many streetlights or other lights on the road ahead.*

Front Camera (DSBS II) detection

- *In the following situations, the high beams may not be automatically changed to the low beams:*
  - *When a vehicle cuts in front of your vehicle*

- *When another vehicle crosses in front of the vehicle*
- *When vehicles ahead are repeatedly detected and then hidden due to repeated curves, road dividers or roadside trees*
- *When a vehicle ahead approaches from a far lane*
- *When a vehicle ahead is far away*
- *When a vehicle ahead has no lights*
- *When the lights of a vehicle ahead are dim*
- *When a vehicle ahead is reflecting strong light, such as own headlights*
- *Situations in which the sensors may not operate properly: Refer to "Situations in which the front camera (DSBS II) and front radar (DSBS II) may not operate properly" (P.5-64) in this section.*

• *The headlights may change to the low beams if a vehicle ahead that is using fog lights without its headlights turned on is detected.*

• *House lights, street lights, traffic signals, and illuminated billboards or signs may cause the high beams to change to the low beams, or the low beams to remain on.*

• *The following may change the the timing at which the headlights change to the low beams:*
  - *The brightness of lights of vehicles ahead*
  - *The movement and direction of vehicles ahead*
  - *The distance between the vehicle and a vehicle ahead*
  - *When a vehicle ahead only has lights illuminated on one side*
  - *When a vehicle ahead is a two-wheeled vehicle*
  - *The condition of the road (gradient, curve, condition of the road surface, etc.)*
  - *The number of passengers and amount of luggage*

• *The headlights may change between the high beams and low beams unexpectedly.*

• *Bicycles and other small vehicles may not be detected.*

• *In the following situations, the system may not be able to correctly detect the brightness of the surroundings. This may cause the low beams to remain on or the high beams to flash or dazzle pedestrians or vehicles ahead. In such a case, it is necessary to manually change between the high beams and low beams.*
  - *When there are lights similar to headlights or tail lights in the surrounding area*
  - *When headlights or tail lights of vehicles ahead are turned off, dirty, changing color, or not aimed properly*
  - *When the headlights are repeatedly changing between the high beams and low beams.*
  - *When use of the high beams is inappropriate or when the high beams may be flashing or dazzling pedestrians or other drivers.*
  - *When the vehicle is used in an area in which vehicles travel on the opposite side of the road of the country for which the vehicle was designed, for example using a vehicle designed for right-hand traffic in a left-hand traffic area, or vice versa*
  - *When it is necessary to disable the system: Refer to "When it is necessary to disable the system" (P.5-59) in this section.*
  - *Situations in which the sensors may not operate properly: Refer to "Situations in which the front camera (DSBS II) and front radar (DSBS II) may not operate properly" (P.5-64) in this section.*

Changing high beam assist setting

The settings of the high beam assist can be changed through the information display setting mode. For details, refer to "Setting mode of information display" (P.12-8).

Turning the high beams on/off manually

• Changing to the high beams

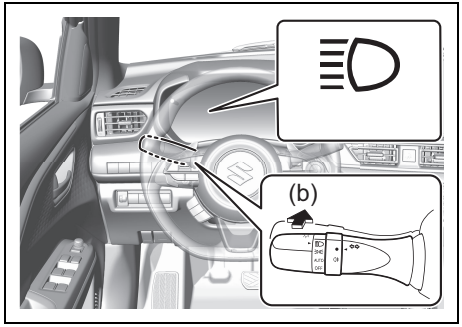

69T050700

- Push the lever forward the vehicle as shown in the illustration (b) to change to the high beams.
- To return to high beam assist, return the lever to its original position again.

• Changing to the low beams

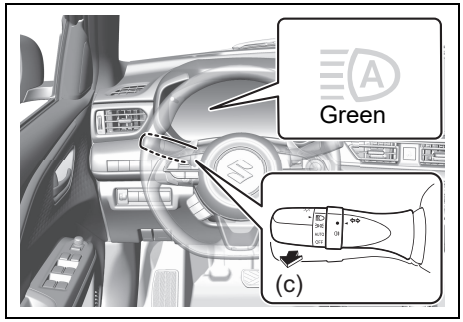

69T050710

- Set the knob of the lighting control lever to the position or position or pull the lighting control lever toward you as shown in the illustration (c), the high beam assist indicator light (green) will turn off.
- To return to high beam assist, pull the lever toward you again or set the knob of the lighting control lever to the “AUTO” position.

Traffic sign recognition (if equipped)

(For European countries)
The traffic sign recognition system detects specific traffic signs using the front camera (DSBS II) and/or navigation system (when speed limit information is available) while driving and warns the driver via information display and buzzers.

In order to maintain performance of the speed limit display function, it is necessary to update map data* on a regular basis.

*: For details about updates, refer to the separate manual “Infotainment System”.

(Except for European countries)
The traffic sign recognition system detects specific traffic signs using the front camera (DSBS II) while driving and warns the driver via information displays and buzzers.

⚠ WARNING

For safe use

- **(For European countries)**
  Regardless of the availability of traffic sign recognition display/ buzzer, including conditional speed limit alert, it is the driver who is solely responsible for driving safely and abiding by the regulations. Therefore, do not overly rely on this system. The driver is solely responsible for paying attention to the vehicle's surroundings and driving safely.
- **Do not rely solely upon the traffic sign recognition. The traffic sign recognition assists the driver by providing traffic sign information, but it is not a replacement for the driver's own vision and awareness. Driving safely is solely the responsibility of the driver. Pay careful attention to the surrounding conditions in order to ensure safe driving.**

(Continued)

⚠ WARNING

(Continued)

Situations in which the traffic sign recognition should not be used

- **Refer to "When it is necessary to disable the system" (P.5-59) in this section.**

Situations in which the system may not operate properly

- **Refer to "Situations in which the front camera (DSBS II) and front radar (DSBS II) may not operate properly" (P.5-64) in this section.**

Display function

(For European countries)
When the front camera (DSBS II) detects a traffic sign or information of a sign is available from the navigation system, the sign will be displayed on the information display.

- Multiple signs can be displayed.
  Depending on the display status of the information display, the number of displayed signs may be limited.

(Except for European countries)
When the front camera (DSBS II) detects a sign, the sign will be displayed on the information display.

NOTE:
Operating conditions of display function

Signs will be displayed on the information display when the following conditions are met:

- *The system has detected a sign*

In the following situations, a displayed sign may stop being displayed:

- *When a new sign has not been detected for a certain distance*
- *When the system determines that the road being driven on has changed, such as after a left or right turn*

Situations in which the display function may not operate properly

In the following situations, the traffic sign recognition system may not operate properly and may not detect signs or may display the incorrect sign. However, this does not indicate a malfunction.

- *When a sign is dirty, faded, tilted or bent*
- *When the contrast of an electronic sign is low*
- *When all or part of a sign is hidden by a tree, utility pole, etc.*
- *When a sign is detected by the front camera (DSBS II) for a short amount of time*
- *When the driving state (turning, changing lanes, etc.) is judged incorrectly*
- *When a sign is immediately after a freeway junction or in an adjacent lane just before merging*
- *When stickers are attached to the rear of a preceding vehicle*
- *When a sign similar to a system compatible sign is detected as a system compatible sign*
- *When a speed limit sign for a frontage road is within detection range of the front camera (DSBS II)*
- *When driving around a roundabout*
- *When a sign intended for trucks, etc. is detected*

(For European countries)

- *When the vehicle is driven in a country with a different direction of traffic*
- *When the navigation system map data is out of date*

Notification function

In the following situations, the traffic sign recognition system will output a warning to notify the driver.

- If the vehicle speed exceeds the speed warning threshold of the speed limit sign displayed on the information display, the sign display will be emphasized and a buzzer will sound.

Also when the limit speed to be displayed is changed due to the change of driving zones, etc., the sign display will be emphasized and a buzzer will sound* to alert the driver. *

*: The availability of emphasized display and buzzer depends on the country where the vehicle is available.

NOTE:

Operating conditions of the notification function

- *Excess speed notification function*
  This function will operate when the following condition is met:
  – *A speed limit sign is recognized by the system.*

Types of traffic signs supported

The following types of traffic signs can be displayed.
However, non-standard or recently introduced traffic signs may not be displayed.

• Speed limit signs*1

		Speed limit begins/Maximum speed zone begins
	*2	Speed limit ends/Maximum speed zone ends

*1: -- No speed limit information is displayed when neither speed limit signs nor speed limit related information is available.

*2: Displayed when a sign is detected but speed limit information for the road is not available from the navigation system.

• Speed limit related information*1*2

	Motorway
	Motorway exit

	Expressway
	Expressway exit
	Urban area beginning
	Urban area ending
	Residential area beginning
	Residential area ending
	End of prohibition

*1: -- No speed limit information is displayed when neither speed limit signs nor speed limit related information is available.

*2: Displayed when a sign is detected but speed limit information for the road is not available from the navigation system.

• No overtaking signs

	No overtaking begins
	No overtaking ends

• Other signs

STOP	Stop
	Roadworks
	Pedestrian crossing

• Speed limit with supplemental mark*1

	Ice
	Supplemental mark exists*2
	Exit ramp on right
	Exit ramp on left
	Time

*1: Displayed simultaneously with a speed limit sign.

*2: Content not recognized.

- Depending on the specifications of the vehicle, signs may be displayed overlapping.

50	Duplicate display example

NOTE:
The above traffic signs are representative examples. The traffic signs may be different in each country.

Changing the traffic sign recognition settings

The settings of the traffic sign recognition can be changed through the information display setting mode. For details, refer to “Setting mode of information display” (P.12-8).

Adaptive cruise control (if equipped)

This adaptive cruise control uses front radar (DSBS II) and front camera (DSBS II) to detect the presence of vehicles ahead, determines the current vehicle-to-vehicle distance, and operates to maintain a suitable distance from the vehicle ahead. The desired vehicle-to-vehicle distance can be set by operating the following distance setting switch.
Use the adaptive cruise control only on highways and expressways.

⚠ WARNING

For safe use

- **Driving safely is solely the responsibility of the driver. Do not overly rely on this system, and pay careful attention to the surrounding conditions in order to ensure safe driving.**

(Continued)

⚠ WARNING

(Continued)

- **The adaptive cruise control provides driving assistance to reduce the driver's burden. However, there are limitations to the assistance provided.**
  Read the following items carefully. Do not overly rely on this system and always drive carefully.
  - **Conditions under which the system may not operate correctly: Refer to “Conditions under which the system may not operate correctly” (P.5-106) in this section.**
- **Set the speed appropriately according to the speed limit, traffic flow, road conditions, weather conditions, etc. The driver is responsible for confirming the set speed.**
- **Even if the system is operating correctly, the condition of a preceding vehicle as recognized by the driver and detected by the system may differ. Therefore, it is necessary for the driver to pay attention, assess risks, and ensure safety. Over-reliance on this system to drive the vehicle safely may lead to an accident resulting in death or serious injury.**

(Continued)

⚠ WARNING

(Continued)

Precautions for the driving assist systems

Observe the following precautions, as there are limitations to the assistance provided by the system. Over-reliance on this system may lead to an accident resulting in death or serious injury.

- **For support for the driver's vision:**
  The adaptive cruise control is only intended to help the driver in determining the distance between the driver's own vehicle and a designated preceding vehicle. It is not a system which allows for careless or inattentive driving, and is not a system which assists in poor visibility conditions.
  The driver must pay attention to their surroundings.

(Continued)

⚠ WARNING

(Continued)

- **For support for the driver's judgment:**
  The adaptive cruise control determines whether the distance between the driver's own vehicle and a designated preceding vehicle is within a set range. It is not capable of making any other type of judgment. Therefore, it is absolutely necessary for the driver to remain vigilant and to determine whether or not there is a possibility of danger.
- **For support for the driver's operation:**
  The adaptive cruise control does not include functions which will prevent or avoid collisions with vehicles ahead of your vehicle. Therefore, if there is ever any possibility of danger, the driver must take immediate and direct control of the vehicle and act appropriately in order to ensure safety.

(Continued)

⚠ WARNING

(Continued)

Situations in which the adaptive cruise control should not be used

Do not use the adaptive cruise control in the following situations. As the system will not be able to provide appropriate control, using it may lead to an accident resulting in death or serious injury.

- **When driving on a road with a mix of pedestrians, bicycles, etc.**
- **When driving on a highway or expressway entrance or exit**
- **When the approach warning sounds frequently**
- **When vehicle is driven on steep hill**

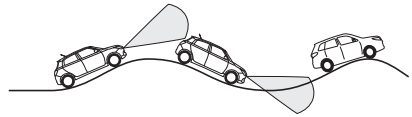

69T050980

- **When vehicle is driven on the road with many steep uphills and downhills**

(Continued)

⚠ WARNING

(Continued)

- **Situations in which the sensors may not operate properly:**
  - **Situations in which the lane may not be detected: Refer to "Situations in which the front camera (DSBS II) and front radar (DSBS II) may not operate properly" (P.5-64) in this section.**
  - **When it is necessary to disable the system: Refer to "When it is necessary to disable the system" (P.5-59) in this section.**
- **A busy road or one that involves frequent acceleration and deceleration. The system could not keep your vehicle at an appropriate speed for traffic conditions.**
- **On a slippery road such as ice or snow-covered road. The tyres may turn over and you may lose control of the vehicle.**
- **When your vehicle is towed or your vehicle is towing another vehicle**
- **When the vehicle cannot move in a straight manner without consistently steering, due to an accident or breakdown**

NOTE:
When the adaptive cruise control is operating, there may be a noise caused by the brake application, which is not abnormal.

Basic functions

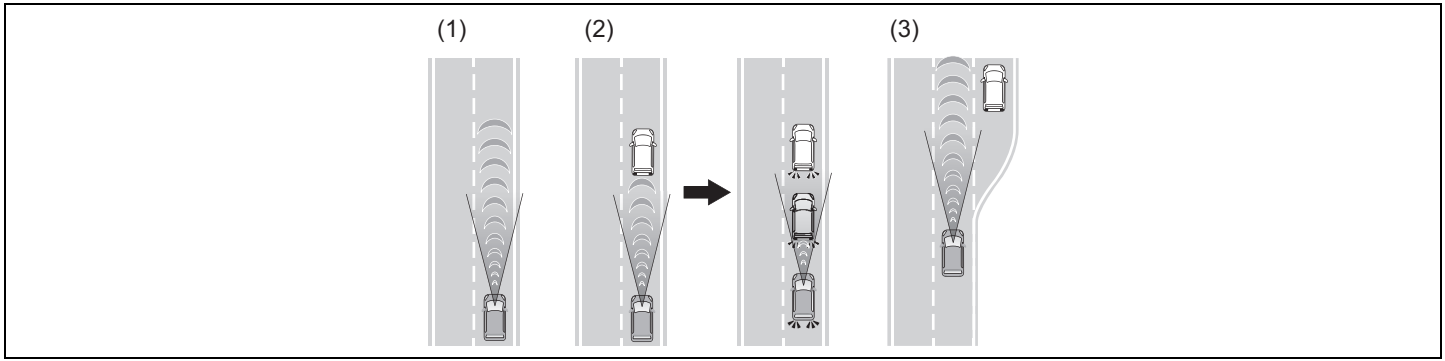

69T050480

(1) Constant speed cruising:
When there are no vehicles ahead
The vehicle drives at the speed set by the driver.
If the set vehicle speed is exceeded while driving down a hill, a message such as the following will appear.

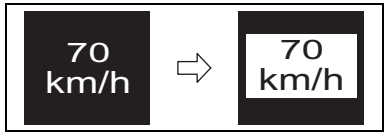

69T050960

(2) Deceleration and follow-up cruising
When a preceding vehicle driving slower than the set vehicle speed is detected
When a vehicle is detected driving ahead of your vehicle, the vehicle automatically decelerates and if a greater reduction in vehicle speed is necessary, the brakes are applied (the stop lights will come on at this time). The vehicle is controlled to maintain the vehicle-to-vehicle distance set by the driver, in accordance with changes in the speed of the preceding vehicle. If vehicle deceleration is not sufficient and the vehicle approaches the vehicle ahead, the approach warning will sound.

(3) Acceleration
When there are no longer any preceding vehicles driving slower than the set vehicle speed
The vehicle accelerates until the set vehicle speed is reached and then resumes constant speed cruising.

System components

• Meter display

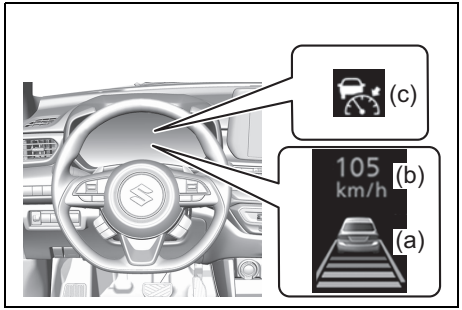

69T050400

(a) Information display
(b) Set vehicle speed
(c) Adaptive cruise control indicator

• Switches

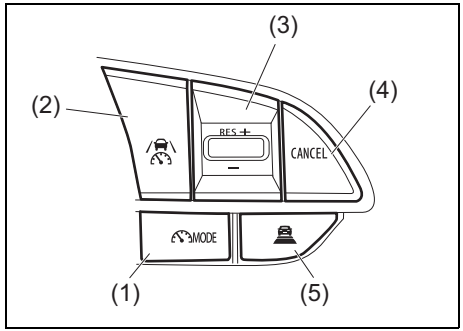

69T050120

(1) Driving assist mode select switch
(2) Driving assist switch
(3) “RES +” / “–” switch
(4) “CANCEL” switch
(5) Following distance setting switch

Using the adaptive cruise control

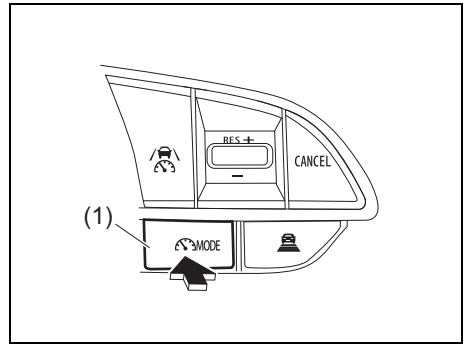

69T050550

1) Press the driving assist mode select switch (1) to select adaptive cruise control.

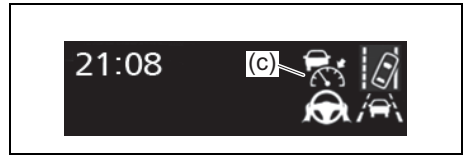

69T050580

The adaptive cruise control indicator (c) will illuminate in white.

NOTE:
(For vehicle with speed limiter)
When the speed limiter is in standby condition:

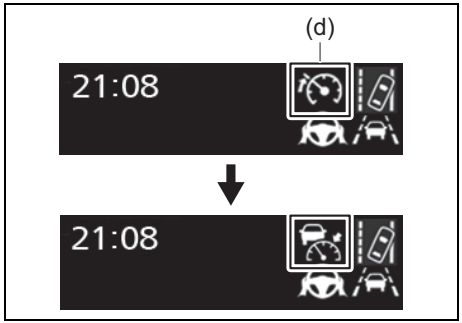

69T050100

- *When the speed limiter is in standby condition (the speed limier indicator (d) illuminates in white), press the driving assist mode select switch (1) to switch from speed limiter to adaptive cruise control.*
- *When the speed limiter is activated (the speed limiter indicator (d) illuminates in green), the driving assist mode cannot be switched from speed limiter to adaptive cruise control.*

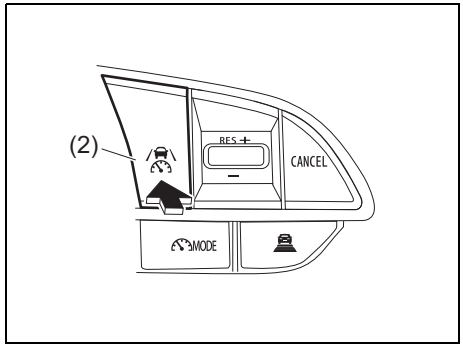

69T050570

2) Using the accelerator pedal, accelerate or decelerate to the desired vehicle speed (approximately 30 km/h (19 mph) or more), and press the driving assist switch (2) to set the set vehicle speed.

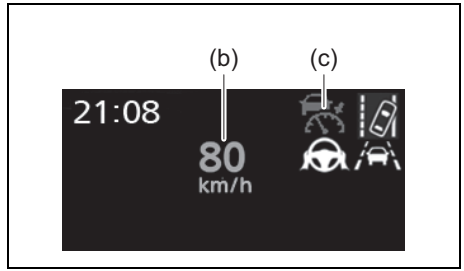

69T050590

The adaptive cruise control indicator (c) will change from illuminated in white to green. The set vehicle speed (b) will be displayed on the information display (a) in green. If the vehicle speed is set while driving at below approximately 30 km/h (19 mph), the set vehicle speed will be set to approximately 30 km/h (19 mph).

Adjusting the set vehicle speed

• Adjusting the set vehicle speed using the switches

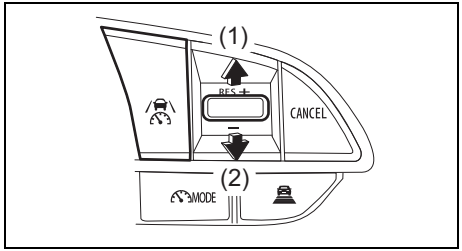

69T050420

(1) Increase set vehicle speed
(2) Decrease set vehicle speed

Short press adjustment:
Press the switch
Long press adjustment:
Press and hold the switch until the desired set vehicle speed is reached.

The set vehicle speed will increase or decrease as follows:

- Short press adjustment:
  By 1 km/h (0.6 mph) or 1 mph (1.6 km/h) each time the switch is pressed.
- Long press adjustment:
  Increases or decreases in 5 km/h (3.1 mph) or 5 mph (8 km/h) increments continuously while the switch is pressed and held.

The set vehicle speed adjustment increment can be changed through a customize setting. Refer to “Setting mode of information display” (P.12-8).

• Increasing the set vehicle speed using the accelerator pedal

1) To increase the set speed, accelerate to the desired speed using the accelerator pedal.
2) Pull up the “RES +” / “–” switch to “RES +” position.
   The new speed will be maintained.

Canceling/resuming control

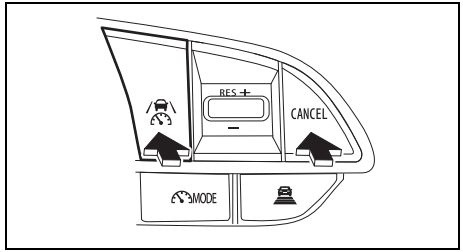

69T050430

1) Press “CANCEL” switch or driving assist switch to cancel control.
   Control will also be canceled if the brake pedal is depressed.
2) Pull up the “RES +” / “–” switch to “RES +” position or press driving assist switch to resume control.

Changing the vehicle-to-vehicle distance

- Each time the switch is pressed, the vehicle-to-vehicle distance setting will change as follows:
  If a preceding vehicle is detected, the preceding vehicle mark (A) will be displayed.

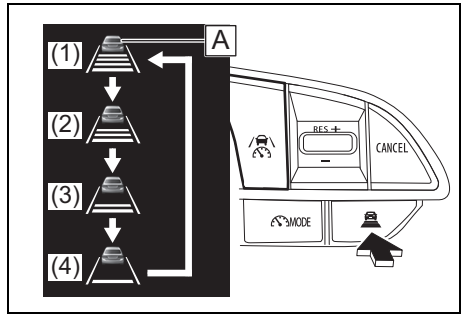

69T050440

Vehicle-to-vehicle distance		Approximate Distance (Vehicle Speed: 100 km/h [62 mph])
(1)	Long	Approximately 70 m (230 ft)
(2)	Medium	Approximately 60 m (197 ft)
(3)	Short	Approximately 45 m (148 ft)
(4)	Shortest	Approximately 30 m (98 ft)

NOTE:

Operating conditions

- *The gear position is in 3rd,4th or 5th.*
- *The desired set speed can be set when the vehicle speed is approximately 30 km/h (19 mph) or more.*

Accelerating after setting the vehicle speed

As with normal driving, acceleration can be performed by depressing the accelerator pedal. After accelerating, the vehicle will return to the set vehicle speed. However, when your vehicle is following another vehicle, the vehicle speed may decrease to below the set vehicle speed in order to maintain the distance from the preceding vehicle.

Automatic cancellation of adaptive cruise control.

In the following situations, the adaptive cruise control will be canceled automatically:

- *When the vehicle speed is approximately 30 km/h (19 mph) or less*
- *When the brake control or output restriction control of SUZUKI SAFETY SUPPORT operates (For example: Dual Sensor Brake Support II (DSBS II)*
- *When the parking brake has been operated*
- *Situations in which some or all of the functions of the system cannot operate: Refer to “Situations in which some or all of the functions of the system cannot operate” (P.5-66) in this section.*

Adaptive cruise control warning messages and buzzers

– *For safe use: Refer to “For safe use” (P.5-59) in this section.*

Preceding vehicles that the sensor may not detect correctly

In the following situations, depending on the conditions, if the system cannot provide sufficient deceleration or acceleration is necessary, operate the brake pedal or accelerator pedal.
As the sensor may not be able to correctly detect these types of vehicles, the approach warning may not operate.
Refer to “Approach warning” (P.5-107) in this section.

- *When a vehicle cuts in front of your vehicle or changes lanes away from your vehicle extremely slowly or quickly*
- *When changing lanes*
- *When a preceding vehicle is driving at a low speed*
- *When a vehicle is stopped in the same lane as the vehicle*
- *When a motorcycle is traveling in the same lane as the vehicle*

Conditions under which the system may not operate correctly

In the following situations, operate the brake pedal (or accelerator pedal, depending on the situation) as necessary.
As the sensor may not be able to correctly detect a vehicle, the system may not operate properly.

- *When a preceding vehicle brakes suddenly*
- *When changing lanes at low speeds, such as in a traffic jam*

Approach warning

In situations where the vehicle approaches a preceding vehicle and the system cannot provide sufficient deceleration, such as if a vehicle cuts in front of the vehicle, a warning display will flash and a buzzer will sound to alert the driver. Depress the brake pedal to ensure appropriate vehicle-to-vehicle distance.

• Warnings may not occur when

In the following situations, the warning may not operate even though the vehicle- to-vehicle distance is short.

- When the preceding vehicle is traveling at the same speed or faster than your vehicle
- When the preceding vehicle is traveling at an extremely low speed
- Immediately after the vehicle speed has been set
- When the accelerator pedal is depressed

Curve speed reduction function

When a curve is detected, the vehicle speed will begin being reduced. When the curve ends, the vehicle speed reduction will end.

Depending on the situation, the vehicle speed will then return to the set vehicle speed.

In situations where vehicle-to-vehicle distance control needs to operate, such as when a preceding vehicle cuts in front of your vehicle, the curve speed reduction function will be canceled.

69TJ050960

NOTE:

Situations in which the curve speed reduction function may not operate

In situations such as the following, the curve speed reduction function may not operate:

- *When the vehicle is being driven around a gentle curve*
- *When the accelerator pedal is being depressed*
- *When the vehicle is being driven around an extremely short curve*

Changing the settings of the curve speed reduction function

Various settings of the curve speed reduction function can be changed through customize settings. Refer to “Setting mode of information display” (P.12-8).

Overtaking prevention function (if equipped)

If a detected vehicle in the passing lane is traveling slower than your vehicle, overtaking will be suppressed.

The overtaking prevention function will not operate if the passing lane is congested or vehicles are traveling at low speeds.

Support for lane change

If your vehicle is being driven at approximately 80 km/h (50 mph) or more and a lane change to the passing lane is performed, when the turn signal control lever is operated for lane changing, the vehicle will accelerate up to the set speed to assist in overtaking.

If your vehicle is being driven at approximately 80 km/h (50 mph) or more and the lane is changed to that with a vehicle traveling slower than your vehicle, when the turn signal control lever is operated the vehicle will gradually decelerate to assist in changing lanes.

Adaptive cruise control with traffic sign recognition (if equipped)

When traffic sign recognition function is enabled and the adaptive cruise control is operating, if a speed limit sign is detected, the detected speed limit will be displayed with an up/down arrow. The set speed can be increased/reduced to the detected speed limit by pressing and holding the “RES +” switch or “–” switch.

- **When the set speed is lower than the detected speed limit**

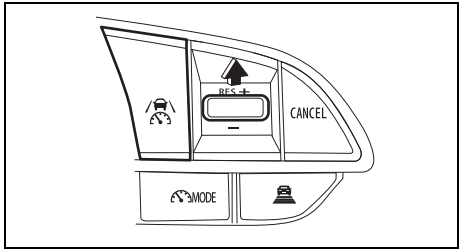

69T050450

Press and hold the “RES +” switch when the UP arrow is indicated in the information display.

- **When the set speed is higher than the detected speed limit**

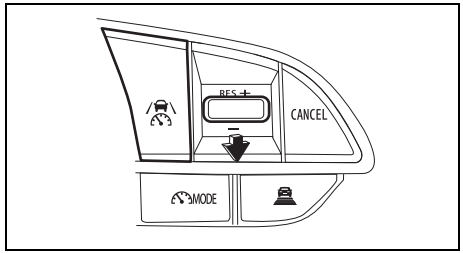

69T050460

Press and hold the “–” switch when the DOWN arrow is indicated in the information display.

- **Enabling/disabling the adaptive cruise control with traffic sign recognition**

The adaptive cruise control with traffic sign recognition can be enabled/disabled through a customize setting. Refer to “Setting mode of information display” (P.12-8).

NOTE:

<u>The adaptive cruise control with traffic sign recognition may not operate properly when</u>

As the adaptive cruise control with traffic sign recognition may not operate properly in situations where the traffic sign recognition may not operate or cannot detect signs correctly, when using this function, make sure to confirm the actual speed limit.

In the following situations, the set speed may not change to the detected speed limit by pressing and holding the “RES +” switch or “–” switch:

- *When speed limit information is not available*
- *When the detected speed limit is the same as the set speed*
- *When the detected speed limit is outside of the speed range which the adaptive cruise control can operate*

Changing Adaptive cruise control settings

The settings of the adaptive cruise control can be changed through customize settings. Refer to “Setting mode of information display” (P.12-8).

Warning and indicator messages

The information display shows the warning and indicator messages to let you know about certain problems of the adaptive cruise control.

When adaptive cruise control cannot be set

Indicator	Message	Master warning indicator light	Sound	Cause and remedy
69T050860	“ACC SYSTEM UNAVAILABLE TURN ON ESP SYSTEM”	Off	Beeps at short intervals (from interior buzzer)	Adaptive cruise control cannot be set because ESP® is OFF. Set ESP® to ON.
69T050860	“ACC SYSTEM UNAVAILABLE”	Off	Beeps at short intervals (from interior buzzer)	This message is displayed in situations where adaptive cruise control cannot be set except for the above causes. Refer to “Adaptive cruise control (if equipped)” (P.5-98) and try to set the cruising speed.

Adaptive cruise control (with following function for all speeds)

This adaptive cruise control uses front radar (DSBS II) and front camera (DSBS II) to detect the presence of vehicles ahead, determines the current vehicle-to-vehicle distance, and operates to maintain a suitable distance from the vehicle ahead. The desired vehicle-to-vehicle distance can be set by operating the following distance setting switch
Use the adaptive cruise control only on highways and expressways.

⚠ WARNING

For safe use

- **Driving safely is solely the responsibility of the driver. Do not overly rely on this system, and pay careful attention to the surrounding conditions in order to ensure safe driving.**

(Continued)

⚠ WARNING

(Continued)

- **The adaptive cruise control provides driving assistance to reduce the driver's burden. However, there are limitations to the assistance provided.**
  Read the following items carefully. Do not overly rely on this system and always drive carefully.
  - **Conditions under which the system may not operate correctly: Refer to "Conditions under which the system may not operate correctly" (P.5-118) in this section.**
- **Set the speed appropriately according to the speed limit, traffic flow, road conditions, weather conditions, etc. The driver is responsible for confirming the set speed.**
- **Even if the system is operating correctly, the condition of a preceding vehicle as recognized by the driver and detected by the system may differ. Therefore, it is necessary for the driver to pay attention, assess risks, and ensure safety. Over-reliance on this system to drive the vehicle safely may lead to an accident resulting in death or serious injury.**

(Continued)

⚠ WARNING

(Continued)

Precautions for the driving assist systems

Observe the following precautions, as there are limitations to the assistance provided by the system. Over-reliance on this system may lead to an accident resulting in death or serious injury.

- **For support for the driver's vision:**
  The adaptive cruise control is only intended to help the driver in determining the distance between the driver's own vehicle and a designated preceding vehicle. It is not a system which allows for careless or inattentive driving, and is not a system which assists in poor visibility conditions.
  The driver must pay attention to their surroundings.

(Continued)

⚠ WARNING

(Continued)

- **For support for the driver's judgment:**
  The adaptive cruise control determines whether the distance between the driver's own vehicle and a designated preceding vehicle is within a set range. It is not capable of making any other type of judgment. Therefore, it is absolutely necessary for the driver to remain vigilant and to determine whether or not there is a possibility of danger.
- **For support for the driver's operation:**
  The adaptive cruise control does not include functions which will prevent or avoid collisions with vehicles ahead of your vehicle. Therefore, if there is ever any possibility of danger, the driver must take immediate and direct control of the vehicle and act appropriately in order to ensure safety.

(Continued)

⚠ WARNING

(Continued)

Situations in which the adaptive cruise control should not be used

Do not use the adaptive cruise control in the following situations. As the system will not be able to provide appropriate control, using it may lead to an accident resulting in death or serious injury.

- **When driving on a road with a mix of pedestrians, bicycles, etc.**
- **When driving on a highway or expressway entrance or exit**
- **When the approach warning sounds frequently**
- **When vehicle is driven on steep hill**

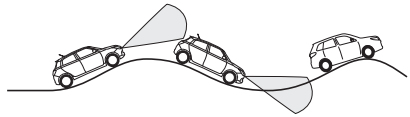

69T050980

- **When vehicle is driven on the road with many steep uphills and downhills**

(Continued)

⚠ WARNING

(Continued)

- **Situations in which the sensors may not operate properly:**
  - **Situations in which the lane may not be detected: Refer to "Situations in which the front camera (DSBS II) and front radar (DSBS II) may not operate properly" (P.5-64) in this section.**
  - **When it is necessary to disable the system: Refer to "When it is necessary to disable the system" (P.5-59) in this section.**
- **A busy road or one that involves frequent acceleration and deceleration. The system could not keep your vehicle at an appropriate speed for traffic conditions.**
- **On a slippery road such as ice or snow-covered road. The tyres may turn over and you may lose control of the vehicle.**
- **When your vehicle is towed or your vehicle is towing another vehicle**
- **When the vehicle cannot move in a straight manner without consistently steering, due to an accident or breakdown**

NOTE:
When the adaptive cruise control is operating, there may be a noise caused by the brake application, which is not abnormal.

Basic functions

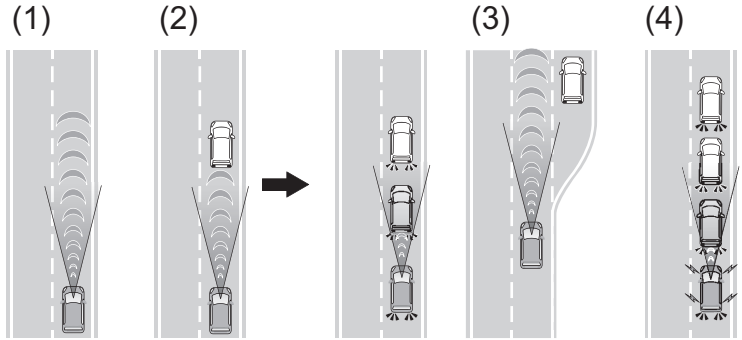

69T050490

(1) Constant speed cruising:
When there are no vehicles ahead
The vehicle drives at the speed set by the driver.
If the set vehicle speed is exceeded while driving down a hill, a message such as the following will appear.

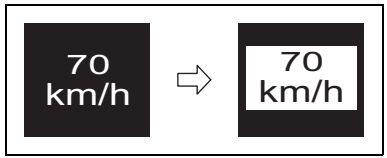

69T050960

(2) Deceleration and follow-up cruising
When a preceding vehicle driving slower than the set vehicle speed is detected
When a vehicle is detected driving ahead of your vehicle, the vehicle automatically decelerates and if a greater reduction in vehicle speed is necessary, the brakes are applied (the stop lights will come on at this time). The vehicle is controlled to maintain the vehicle-to-vehicle distance set by the driver, in accordance with changes in the speed of the preceding vehicle. If vehicle deceleration is not sufficient and the vehicle approaches the vehicle ahead, the approach warning will sound.

(3) Acceleration
When there are no longer any preceding vehicles driving slower than the set vehicle speed
The vehicle accelerates until the set vehicle speed is reached and then resumes constant speed cruising.

(4) Stop the vehicle following a preceding vehicle:
If a preceding vehicle stops, the vehicle will also stop. However, it does not have a function to maintain a stopped state, so apply the brakes immediately after stopping the vehicle.

System components

• Meter display

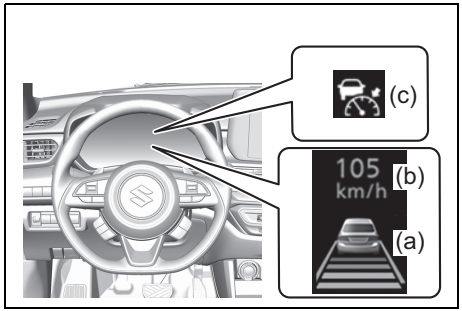

69T050400

(a) Information display
(b) Set vehicle speed
(c) Adaptive cruise control indicator

• Switches

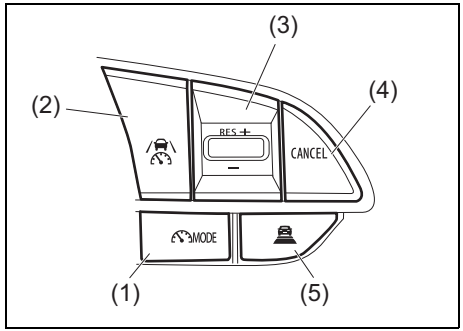

69T050120

(1) Driving assist mode select switch
(2) Driving assist switch
(3) “RES +” / “–” switch
(4) “CANCEL” switch
(5) Following distance setting switch

Using the adaptive cruise control

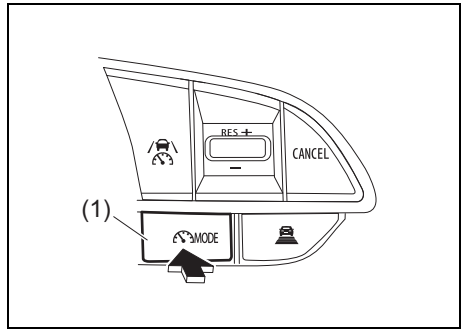

69T050550

1) Press the driving assist mode select switch (1) to select adaptive cruise control.

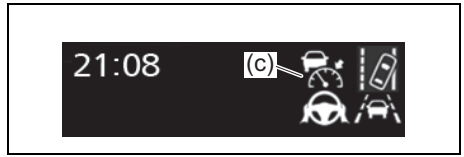

69T050580

The adaptive cruise control indicator (c) will illuminate in white.

NOTE:
(For vehicle with speed limiter)
When the speed limiter is in standby condition:

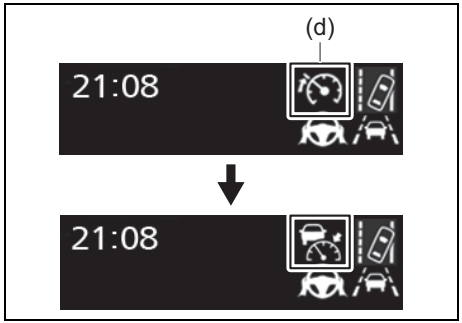

69T050100

- *When the speed limiter is in standby condition (the speed limier indicator (d) illuminates in white), press the driving assist mode select switch (1) to switch from speed limiter to adaptive cruise control.*
- *When the speed limiter is activated (the speed limiter indicator (d) illuminates in green), the driving assist mode cannot be switched from speed limiter to adaptive cruise control.*

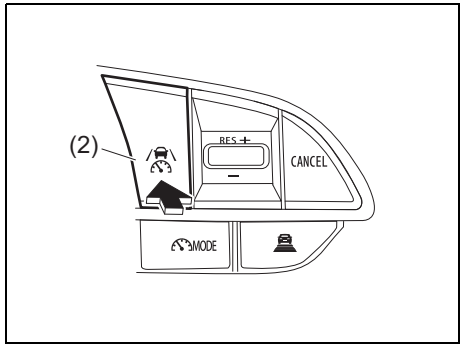

69T050570

2) Using the accelerator pedal, accelerate or decelerate to the desired vehicle speed (approximately 30 km/h (19 mph) or more), and press the driving assist switch (2) to set the set vehicle speed.

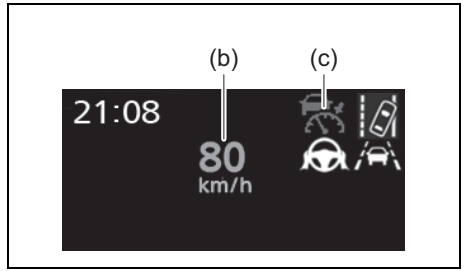

69T050590

The adaptive cruise control indicator (c) will change from illuminated in white to green. The set vehicle speed (b) will be displayed on the information display (a) in green. If the vehicle speed is set while driving at below approximately 30 km/h (19 mph), the set vehicle speed will be set to approximately 30 km/h (19 mph).

Adjusting the set vehicle speed

• Adjusting the set vehicle speed using the switches

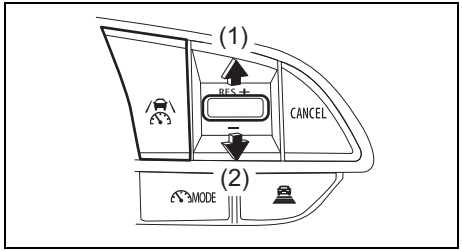

69T050420

(1) Increase set vehicle speed
(2) Decrease set vehicle speed

Short press adjustment:
Press the switch
Long press adjustment:
Press and hold the switch until the desired set vehicle speed is reached.

The set vehicle speed will increase or decrease as follows:

- Short press adjustment:
  By 1 km/h (0.6 mph) or 1 mph (1.6 km/h) each time the switch is pressed.
- Long press adjustment: Increases or decreases in 5 km/h (3.1 mph) or 5 mph (8 km/h) increments continuously while the switch is pressed and held.

The set vehicle speed adjustment increment can be changed through a customize setting. Refer to “Setting mode of information display” (P.12-8).

• Increasing the set vehicle speed using the accelerator pedal

1) To increase the set speed, accelerate to the desired speed using the accelerator pedal.
2) Pull up the “RES +” / “–” switch to “RES +” position.
   The new speed will be maintained.

Canceling/resuming control

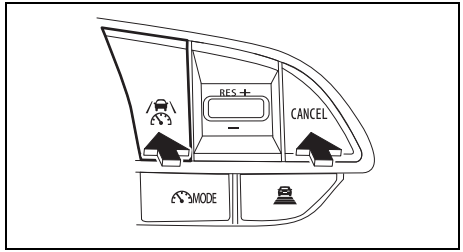

69T050430

1) Press “CANCEL” switch or driving assist switch to cancel control.
   Control will also be canceled if the brake pedal is depressed.
2) Pull up the “RES +” / “–” switch to “RES +” position or press driving assist switch to resume control.

Changing the vehicle-to-vehicle distance

- Each time the switch is pressed, the vehicle-to-vehicle distance setting will change as follows:
  If a preceding vehicle is detected, the preceding vehicle mark (A) will be displayed.

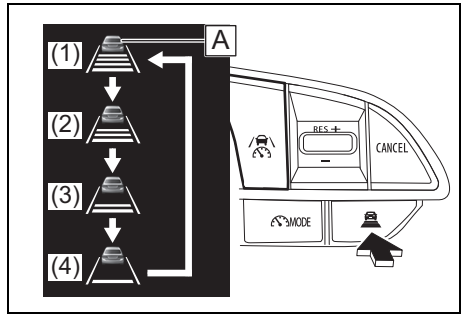

69T050440

Vehicle-to-vehicle distance		Approximate Distance (Vehicle Speed: 100 km/h [62 mph])
(1)	Long	Approximately 70 m (230 ft)
(2)	Medium	Approximately 60 m (197 ft)
(3)	Short	Approximately 45 m (148 ft)
(4)	Shortest	Approximately 30 m (98 ft)

NOTE:

Operating conditions

- *The gearshift lever is in "D".*
- *The desired set speed can be set when the vehicle speed is approximately 30 km/h (19 mph) or more.*
  (If the vehicle speed is set while driving at below approximately 30 km/h [19 mph], the set speed will be set to approximately 30 km/h [19 mph].)

Accelerating after setting the vehicle speed

As with normal driving, acceleration can be performed by depressing the accelerator pedal. After accelerating, the vehicle will return to the set vehicle speed. However, while in vehicle-to-vehicle distance control mode, the vehicle speed may decrease to below the set vehicle speed in order to maintain the distance from the preceding vehicle.

Automatic cancellation of adaptive cruise control (with following function for all speed)

In the following situations, the adaptive cruise control will be canceled automatically:

- *When the vehicle is stopped*
- *When the brake control or output restriction control of SUZUKI SAFETY SUPPORT operates (For example: Dual Sensor Brake Support II (DSBS II)*
- *When the parking brake has been operated*
- *Situations in which some or all of the functions of the system cannot operate: Refer to "Situations in which some or all of the functions of the system cannot operate" (P.5-66) in this section.*

Adaptive cruise control warning messages and buzzers

– *For safe use: Refer to "For safe use" (P.5-59) in this section.*

Preceding vehicles that the sensor may not detect correctly

In the following situations, depending on the conditions, if the system cannot provide sufficient deceleration or acceleration is necessary, operate the brake pedal or accelerator pedal.
As the sensor may not be able to correctly detect these types of vehicles, the approach warning may not operate.
Refer to "Approach warning" (P.5-107) in this section.

- *When a vehicle cuts in front of your vehicle or changes lanes away from your vehicle extremely slowly or quickly*
- *When changing lanes*
- *When a preceding vehicle is driving at a low speed*
- *When a vehicle is stopped in the same lane as the vehicle*
- *When a motorcycle is traveling in the same lane as the vehicle*

Conditions under which the system may not operate correctly

In the following situations, operate the brake pedal (or accelerator pedal, depending on the situation) as necessary.
As the sensor may not be able to correctly detect a vehicle, the system may not operate properly.

- *When a preceding vehicle brakes suddenly*
- *When changing lanes at low speeds, such as in a traffic jam*

Approach warning

In situations where the vehicle approaches a preceding vehicle and the system cannot provide sufficient deceleration, such as if a vehicle cuts in front of the vehicle, a warning display will flash and a buzzer will sound to alert the driver. Depress the brake pedal to ensure appropriate vehicle-to-vehicle distance.

• Warnings may not occur when

In the following situations, the warning may not operate even though the vehicle- to-vehicle distance is short.

- When the preceding vehicle is traveling at the same speed or faster than your vehicle
- When the preceding vehicle is traveling at an extremely low speed
- Immediately after the vehicle speed has been set
- When the accelerator pedal is depressed

Curve speed reduction function

When a curve is detected, the vehicle speed will begin being reduced. When the curve ends, the vehicle speed reduction will end.
Depending on the situation, the vehicle speed will then return to the set vehicle speed.
In situations where vehicle-to-vehicle distance control needs to operate, such as when a preceding vehicle cuts in front of your vehicle, the curve speed reduction function will be canceled.

69TJ050960

NOTE:
Situations in which the curve speed reduction function may not operate

In situations such as the following, the curve speed reduction function may not operate:

- *When the vehicle is being driven around a gentle curve*
- *When the accelerator pedal is being depressed*
- *When the vehicle is being driven around an extremely short curve*

Changing the settings of the curve speed reduction function

Various settings of the curve speed reduction function can be changed through customize settings. Refer to "Setting mode of information display" (P.12-8).

Overtaking prevention function (if equipped)

If a detected vehicle in the passing lane is traveling slower than your vehicle, overtaking will be suppressed.
The overtaking prevention function will not operate if the passing lane is congested or vehicles are traveling at low speeds.

Support for lane change

If your vehicle is being driven at approximately 80 km/h (50 mph) or more and a lane change to the passing lane is performed, when the turn signal control lever is operated for lane changing, the vehicle will accelerate up to the set speed to assist in overtaking.
If your vehicle is being driven at approximately 80 km/h (50 mph) or more and the lane is changed to that with a vehicle traveling slower than your vehicle, when the turn signal control lever is operated the vehicle will gradually decelerate to assist in changing lanes.

Adaptive cruise control with traffic sign recognition (if equipped)

When traffic sign recognition function is enabled and the adaptive cruise control is operating, if a speed limit sign is detected, the detected speed limit will be displayed with an up/down arrow. The set speed can be increased/reduced to the detected speed limit by pressing and holding the "RES +" switch or "–" switch.

• When the set speed is lower than the detected speed limit

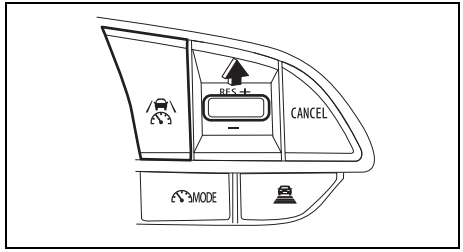

69T050450

Press and hold the "RES +" switch when the UP arrow is indicated in the information display.

• When the set speed is higher than the detected speed limit

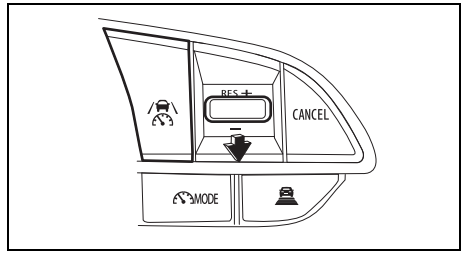

69T050460

Press and hold the "–" switch when the DOWN arrow is indicated in the information display.

• Enabling/disabling the adaptive cruise control with traffic sign recognition

The adaptive cruise control with traffic sign recognition can be enabled/disabled through customize settings. Refer to "Setting mode of information display" (P.12-8).

NOTE:
The adaptive cruise control with traffic sign recognition may not operate properly when

As the adaptive cruise control with traffic sign recognition may not operate properly in situations where the traffic sign recognition may not operate or cannot detect signs correctly, when using this function,

make sure to confirm the actual speed limit.
In the following situations, the set speed may not change to the detected speed limit by pressing and holding the "RES +" switch or "–" switch:

- *When speed limit information is not available*
- *When the detected speed limit is the same as the set speed*
- *When the detected speed limit is outside of the speed range which the adaptive cruise control can operate*

Changing adaptive cruise control settings

The settings of the adaptive cruise control can be changed through customize settings. Refer to "Setting mode of information display" (P.12-8).

Warning and indicator messages

The information display shows the warning and indicator messages to let you know about certain problems of the adaptive cruise control.

When adaptive cruise control (with following function for all speed) cannot be set

Indicator	Message	Master warning indicator light	Sound	Cause and remedy
69T050860	“ACC SYSTEM UNAVAILABLE TURN ON ESP SYSTEM”	Off	Beeps at short intervals (from interior buzzer)	Adaptive cruise control cannot be set because ESP® is OFF. Set ESP® to ON.
69T050860	“ACC SYSTEM UNAVAILABLE SHIFT INTO D”	Off	Beeps at short intervals (from interior buzzer)	Adaptive cruise control cannot be set because the gearshift lever is not in “D” position. Shift the gearshift lever in “D” and try again.
69T050860	ACC SYSTEM UNAVAILABLE	Off	Beeps at short intervals (from interior buzzer)	This message is displayed in situations where adaptive cruise control cannot be set except for the above causes. Refer to “Adaptive cruise control (with following function for all speeds)” (P.5-110) and try to set the cruising speed.

When adaptive cruise control (with following function for all speed) is automatically cancelled

Indicator	Message	Master warning indicator light	Sound	Cause and remedy
No display	“DEPRESS BRAKE PEDAL”	Off	Continuous beep (from interior buzzer)	Adaptive cruise control was cancelled because the system was unable to continuously stop the vehicle.
		Off	Continuous beep (from interior buzzer)	It is displayed when the adaptive cruise control is cancelled except for the above. Refer to “Adaptive cruise control (with following function for all speeds)” (P.5-110). Improve the cause, set adaptive cruise control again.

Blind Spot Monitor (BSM) (if equipped)

Blind Spot Monitor (BSM) detects presence of a vehicle diagonally in the rear and tells you of the presence by the outside rearview mirror and an interior buzzer. This system assists the driver to change lanes.

⚠ WARNING

- **The BSM is a supplemental device to tell you the presence of a vehicle approaching diagonally from the rear. However, your responsibility for safe driving is the most important matter. Check around the vehicle using your direct vision or mirrors.**
- **Depending on the circumstances, the system may not work. Do not rely excessively on the system and always drive in a safe manner. Overreliance on this function may lead to an accident.**

The sensor detects a vehicle running on the neighboring lane or approaching from the rear on the neighboring lane and tells the presence to you. The indicator on the outside rearview mirror at the detected side comes on.

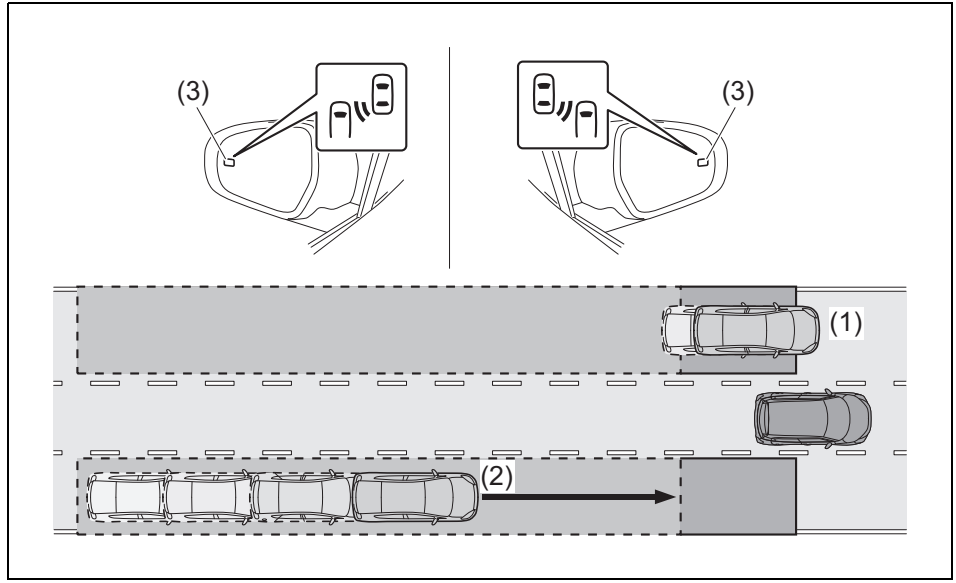

69T050760

(1) A vehicle running alongside in the area where the outside rearview mirror cannot reflect
(2) A vehicle rapidly approaching the area where the outside rearview mirror cannot reflect
(3) Indicator

When the driver operates turn signal control lever to the detected side, an interior buzzer sounds and the indicator on the outside rearview mirror blinks.

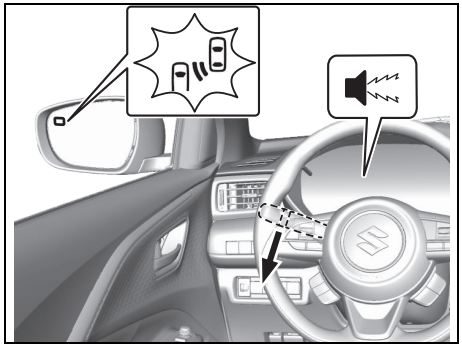

69T050780

Detecting area

Vehicle entering the following areas can be detected.

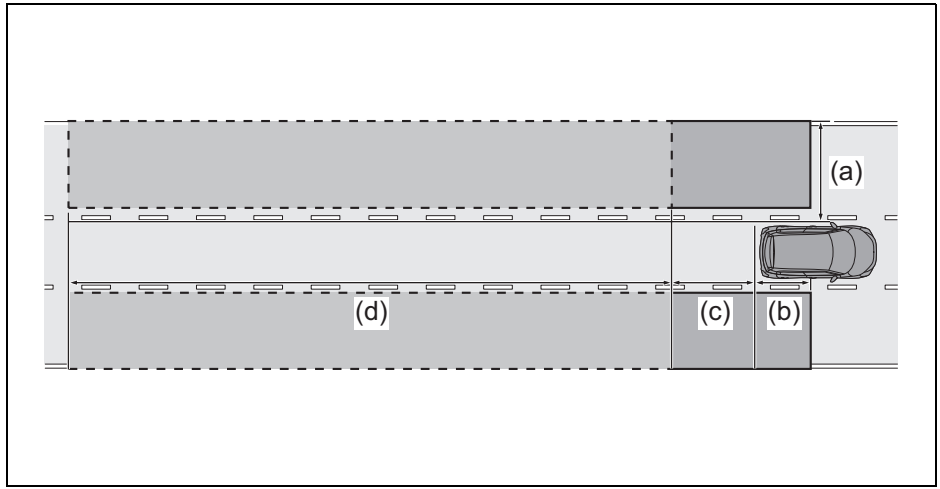

69T050770

(a) An area about 0.5 to 4.0 m (1.6 to 13.1 ft) from both sides of the vehicle
(b) An area between the rear bumper and near the driver's seat
(c) An area about 4.0 m (13.1 ft) behind the rear bumper
(d) An area between about 4 and 50 m (13.1 and 164 ft) behind the rear bumper

NOTE:
The greater the difference in speed between your vehicle and the detected vehicle is, the farther away the vehicle will be detected, causing the outside rearview mirror indicator to illuminate or blink.

Operating condition
When all the following conditions are satisfied, the BSM will actuate.
- When the BSM OFF indicator light is not indicated.
- When gearshift lever position is other than “R”.
- When vehicle speed is about 15 km/h (9 mph) or more.
- When the engine is running.

NOTE:
Using the setting mode in the information display, the BSM can be canceled. For details on how to use the information display, refer to “Setting mode of information display” (P.12-8).

Situations where the system does not activate
Vehicles shown below cannot be detected and the BSM will not activate.
- Small motorcycle, bicycle and pedestrian*
- Oncoming vehicle
- Vehicle running behind on the same lane*
- Vehicles traveling 2 lanes away from your vehicle*
- Guardrails, walls, signs, parked vehicles and similar stationary objects*

* Depending on conditions, detection of a vehicle and/or object may occur.

Situations where the system may not activate properly
Under the following situations, the BSM may not activate correctly due to ineffective detection.
When sensor or surrounding area on the rear bumper is covered with foreign materials such as dirt, snow, ice, etc. (remove foreign materials)
When sensor is misaligned in such a case as a strong impact to the sensor or the rear bumper
- When the tyres are slipping or spinning

When the distance between your vehicle and a guardrail, wall, etc., that enters the detection area is short
With a modified suspension (Altering the vehicle height, etc.)
When your vehicle is weighed down by heavy items in the luggage compartment
- When the battery has a voltage abnormality

When the temperature around the sensor is too high/low
- The entrance or exit of a tunnel

When rear visibility is poor due to exhaust gas, splash of water or snow, spray, sand or smoke
When two or more vehicles are approaching one after another continuously
- When distance to a vehicle behind is too close

When speed difference between your vehicle and a vehicle behind in the detecting area is too big
When vehicle speed between your vehicle and other vehicle in the detecting area is almost the same
When starting from standstill, another vehicle in the detecting area remains
When running on a steep uphill, downhill, continuous sharp curves or pavement joints
When running on road with rough, bumpy or uneven surface
When speed difference between your vehicle and other vehicle varies
When the other vehicle running on the neighboring lane is too far due to wide lane, running on edge of lane, etc.
When your vehicle is equipped with accessory such as carrier in the rear
When height difference between your vehicle and other vehicle in the detecting area is too big (A low-slung vehicle and sports cars etc.)

Sensor location

The sensors (1) are arranged in the rear bumper at right and left one by one.

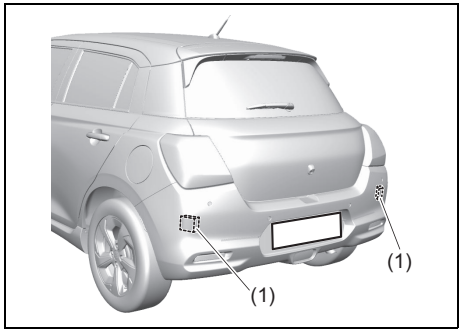

69T050790

⚠ WARNING

For correct activation of the sensor, you are requested to observe the following precautions. Lack of reasonable care of the sensor may cause detection error due to malfunction and lead to accident.

- **Keep the rear bumper around the sensors clean always.**
- **Do not give strong impact or pressure to the rear bumper. If the radar sensor periphery such as the radar sensor or rear bumper is deformed or damaged due to a contact accident, do not use the blind spot monitor and consult an authorized SUZUKI dealer or a qualified workshop**
- **Do not stick stickers on the rear bumper around the sensors.**
- **Do not modify the surrounding area on the rear bumper. In case the rear bumper gets damaged or the paint gets peeled off, the system may malfunction. If this occurs, consult an authorized SUZUKI dealer or a qualified workshop.**
- **Do not remove or disassemble the radar sensors or peripheral components.**

Stopping BSM /RCTA

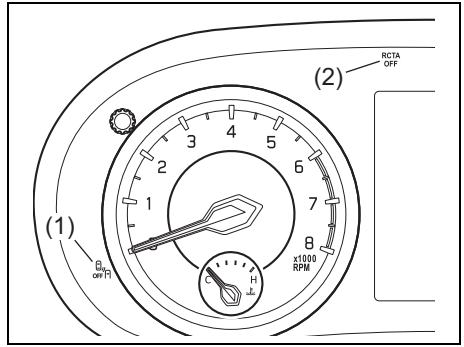

69TJ051520

(1) BSM OFF indicator light
(2) RCTA OFF indicator light

Using the setting mode on the information display, the BSM can be stopped. For details on how to use the information display, refer to “Setting mode of information display” (P.12-8). When the BSM is stopped, the BSM OFF indicator light (1) and RCTA OFF indicator light (2) come on.

In the following situations, the BSM OFF indicator light or RCTA OFF indicator light blinks and the system is deactivated.

- When the sensor or bumper is covered in snow, ice or dirt
- When the temperature around the sensor is too high/low

- When the mounting position or angle of the sensor is shifted
- When the battery voltage is decreased

If the light blinks and stays on, there may be a malfunction of the systems. You should have the systems inspected by an authorized SUZUKI dealer or a qualified workshop.

NOTE:
When the BSM is stopped, the RCTA is also stopped. When the BSM is ON, the RCTA can be stopped separately. For details about RCTA, refer to ""Rear Cross Traffic Alert (RCTA) (if equipped)" (P.5-129).

Warning and indicator messages of BSM/RCTA

The information display shows the warning and indicator messages to let you know about certain problems.

Warning and indicator message	Warning indicator	Master warning indicator light	Sound	Cause and remedy
69T050830 “BSM SYSTEM FUNCTION PAUSED”	Blinks 69T050850	Blinks 	Chime	BSM and RCTA are suspended. If the warning message remains after starting the engine again, have your vehicle inspected by an authorized SUZUKI dealer or a qualified workshop.
				BSM and RCTA are suspended due to dirt on sensor and rear bumper around the sensor. Remove the dirt from the sensor and rear bumper around the sensor, and restart the engine. If the warning message remains, have your vehicle inspected by an authorized SUZUKI dealer or a qualified workshop.
69T050830 “BSM SYSTEM TEST REQUIRED”	Blinks 69T050850	Blinks 	Chime	There may be a problem with the BSM and RCTA. Have your vehicle inspected by an authorized SUZUKI dealer or a qualified workshop.

Rear Cross Traffic Alert (RCTA) (if equipped)

Rear Cross Traffic Alert (RCTA) detects the presence of a vehicle from the rear right or the rear left and tells you of the presence by the image in the information display and an interior buzzer. This system assists the driver when backing up.

⚠ WARNING

- **The RCTA is a supplemental device to tell you the presence of a vehicle approaching from the left and right rear when backing up. However, your responsibility for safe driving is the most important matter. Check around the vehicle using your direct vision or mirrors.**
- **Depending on the circumstances, the system may not work. Do not rely excessively on the system and always drive in a safe manner. Overreliance on this function may lead to an accident.**

While your vehicle is backing up, if the approaching vehicle from the rear right or the rear left is detected by the radar sensor, an interior buzzer sounds and the information display shows the following image such as (2) and/or (3). Also, the following image such (4) and/or (5) as will be displayed on the rear view camera monitor (if equipped). In addition, the indicators (6) and (7) on both outside rearview mirror blinks.

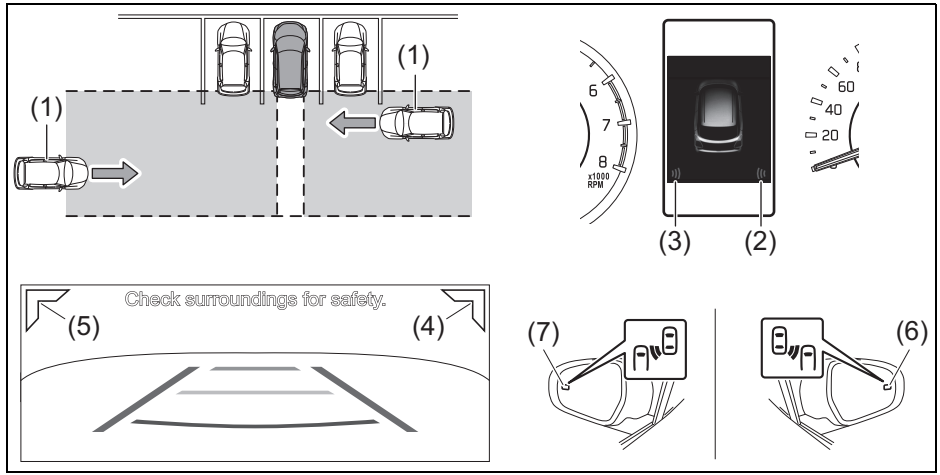

69T050840

(1) Approaching vehicle
(2) Approaching vehicle from the rear right
(3) Approaching vehicle from the rear left
(4) Approaching vehicle from the rear right
(5) Approaching vehicle from the rear left
(6) Indicator
(7) Indicator

Detecting area
Vehicle in the following area can be detected.

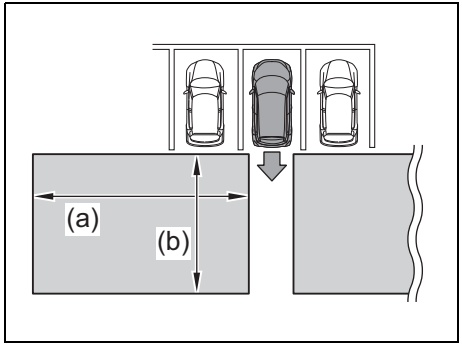

69T050880

(a) About 20 m (66 ft)
(b) About 8 m (26 ft)

Operating condition
When all of the following conditions are satisfied, the RCTA is activated.

- When the BSM OFF indicator light is not indicated
- When the RCTA OFF indicator light is not indicated
- When gearshift lever position is in “R” position
- When the retreating vehicle speed is about 8 km/h (5 mph) or below
- When approaching vehicle speed is approximately 3.6 to 90 km/h (2 to 56 mph)

NOTE:
- *Using the setting mode on the information display, RCTA can be stopped. For details on how to use the information display, refer to “Setting mode of information display” (P.12-8).*
- *If the BSM is stopped using the setting mode on the information display, the RCTA is also stopped.*

Situations where the system does not activate
The system does not detect the following vehicles, and the RCTA will not activate.
- Approaching vehicle from just behind
- A vehicle backing up from the neighboring parking space

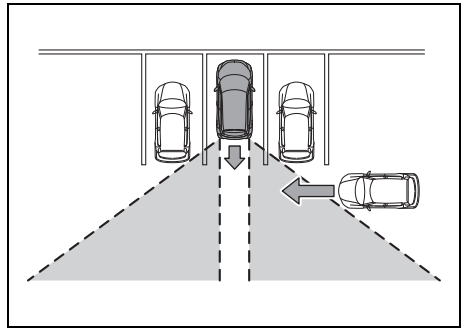

69T050890

- A vehicle cannot be detected due to an obstacle
- Parked vehicles and similar stationary objects*
- Small motorcycle, bicycle and pedestrian*
- A vehicle moving away from your vehicle

* Depending on conditions, detection of a vehicle and/or object may occur.

Situations where the system may not activate properly

Under the following conditions, the system cannot detect vehicle effectively and the RCTA may not activate properly.

- When sensor or surrounding area on the rear bumper is covered with foreign materials such as dirt, snow, ice, etc. (remove foreign materials)
- When there is bad weather such as a heavy rain, dense fog or blizzard
- When rear visibility is poor due to exhaust gas, splash of water or snow, spray, sand or smoke
- When sensor is misaligned in such a case as a strong impact to the sensor or the rear bumper
- When two or more vehicles are approaching one after another continuously
- A vehicle approaching in high speed
- When the battery has a voltage abnormality
- When the temperature around the sensor is too high/low
- A vehicle parked at a shallow angle
- In an environment with grates and gutters.
- Extreme changes in vehicle height (Nose up, nose down, etc.)
- When water splashes toward the sensor from sprinklers, etc.
- When a guardrail, wall, etc., is at a short distance and they are within the detection range.

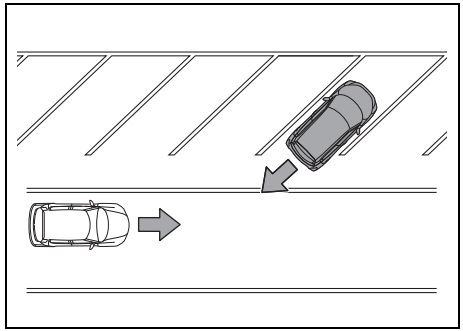

69T050900

Sensor location

For details, refer to “Sensor location” (P.5-126).

Stopping RCTA

For details, refer to “Stopping BSM /RCTA” (P.5-126).

Warning and indicator messages

The information display shows the warning and indicator messages to let you know about certain problems of the RCTA. For details, refer to “Warning and indicator messages of BSM/RCTA” (P.5-128).

Ultrasonic sensors

The ultrasonic sensor transmits ultrasonic, it hits an obstacle and the sensor receive the reflected ultrasonic again. The sensor will detect the position of the obstacle based on the time which takes for transmitting and receiving ultrasonic.

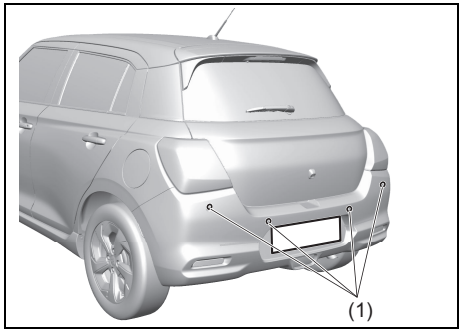

69T050720

(1) Ultrasonic sensors

- The position of each ultrasonic sensor in the above figure is a typical example; the actual equipment depends on the vehicle type.

⚠ WARNING

<u>To prevent malfunction of the ultrasonic sensor</u>

Observe the following precautions. Failure to do so may lead to the ultrasonic sensor not operating properly, possibly leading to an accident resulting in death or serious injury.

- **Keep the ultrasonic sensors clean at all times.**
- **Clean the ultrasonic sensors if it is dirty or covered with water droplets, snow, plastic bag, etc. Clean the ultrasonic sensors with a soft cloth so as to not mark or damage them.**
- **Do not attach accessories, stickers (including transparent stickers), etc. to the ultrasonic sensors and their surrounding area.**
- **Do not subject the ultrasonic sensors or their surrounding area to impact.**
  If the ultrasonic sensors or rear bumper has been subjected to a impact, have the vehicle inspected by an authorized SUZUKI dealer or a qualified workshop.
- **Do not change the position or orientation of the ultrasonic sensor or remove it.**
- **Do not disassemble the ultrasonic sensors.**

(Continued)

⚠ WARNING

(Continued)

- **Do not modify or paint the ultrasonic sensors or ultrasonic sensor covers, or replace them with anything other than SUZUKI genuine parts.**
- **When using a high-pressure cleaner, do not point the nozzle to the ultrasonic sensors.**
- **When using steam to clean the vehicle, do not direct steam too close to the ultrasonic sensors.**
- **In the following situations, an angle measurement/ initialization of the ultrasonic sensor will be necessary. Contact an authorized SUZUKI dealer or a qualified workshop for details.**
  - **When an ultrasonic sensor is removed and installed, or replaced**
  - **When the rear bumper has been replaced**

Temporary stop or failure of the ultrasonic sensor

	Instrument cluster	Information display message	Ultrasonic sensor	
			Temporary stop	Failure
(1)	59S010120	–	On	
(2)	80P0382	–	Off	Blinks
(3)	69T040310	"CLEAN PARKING SENSORS"	Displayed	Not displayed
(4)	69T040310	"SERVICE PARKING SENSORS"	Not displayed	Displayed

(1) Parking sensor indicator light
(2) Master warning indicator
(3) Indication of the rear parking sensor needs cleaning
(4) Failure of the ultrasonic sensor

NOTE:
When temporary stop of the ultrasonic sensor or failure of the ultrasonic sensor occurs, the parking sensors will stop.

Temporary stop of the ultrasonic sensor

The ultrasonic sensor will temporarily stop under the following situations. If the situations are improved, temporary stop of the ultrasonic sensor will be canceled.

- When any foreign object such as dirt, snow and ice is attached to the ultrasonic sensor
- When the battery has temporarily a voltage abnormality

Failure of the ultrasonic sensor
When the ultrasonic sensor is faulty, the function of the ultrasonic sensor is stopped until the engine switch is pressed to change the ignition mode to LOCK (OFF).
Stop the vehicle in a safe place, press the engine switch to change the ignition mode to LOCK (OFF) and stop the engine. Then, restart the engine and check that the parking sensor indicator light is turned off.
If the parking sensor indicator light stays on after restarting the engine, there may be a failure of the ultrasonic sensor. Ask an authorized SUZUKI dealer or a qualified workshop to have the ultrasonic sensor inspected.

NOTE:
If the parking sensor indicator light comes on and there may be a failure of the ultrasonic sensor, the system will stop. However, there would not be a problem to normal driving.

When the ultrasonic sensor detects any foreign object
When the ultrasonic sensor detects any foreign object such as dirt, snow or ice which attaches to the sensor, the indication will be displayed on the information display as the following chart shows. When you remove the attached foreign object, the ultrasonic sensor will properly function again. While any foreign object is detected, the ultrasonic sensor will temporarily stop functioning. Even though no foreign object is attached to the ultrasonic sensor and the following indication is displayed, there may be a possibility of sensor abnormality. Ask an authorized SUZUKI dealer or a qualified workshop to have the ultrasonic sensor inspected.

Information display

69T050510

"CLEAN PARKING SENSORS"

* The side which detects any foreign object is shown

Situations where the ultrasonic sensor may not activate properly
Under the following situations, the ultrasonic sensor may not activate properly.

- When any foreign object such as dirt, snow or ice is attached to the ultrasonic sensor (In this case, remove the foreign object)

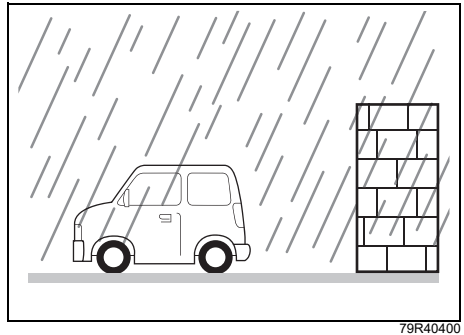

79R40400

- When it is bad weather such as heavy rain, fog or a blizzard
- When strong winds are blowing
- When backward visibility is poor due to exhaust gas from the vehicle, water, snow, water vapor, sand or smoke
- When the ultrasonic sensor is covered by a sticker or an accessory
- When a commercially-available electrical component such as a towing hook, a back-lit license plate, a fog lamp, a corner pole or a radio antenna is equipped

- When the vehicle position or the height of bumper is changed due to modification of suspension
- When the installed direction of rear parking sensors is misaligned due to a collision
- When snow chains or the tyres of undesigned size are equipped
- When the vehicle is inclined to drive over bumps on the road
- When the surrounding part of the ultrasonic sensor is hot or cold under the blazing sun or in extremely cold weather
- When humidity is extremely high or low

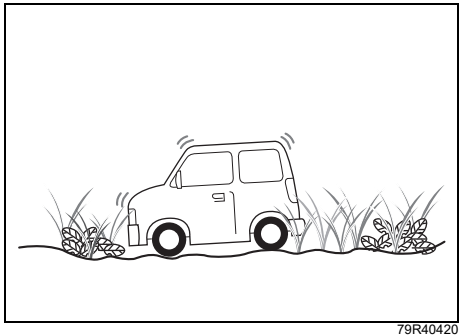

79R40420

- When you drive on rough road, slope, gravel or grown grass
- When your vehicle is severely inclined
- When there is any object which emits ultrasonic characteristics such as horn from the other vehicle, engine sound from a motorcycle, air brake sound from a large-size vehicle, brake sound, vehicle detector or ultrasonic sensor from the other vehicle
- When the ultrasonic sensor gets too close to an obstacle
- When the vehicle is moved in a diagonal direction towards an obstacle or to the edge or corner of a wall (reflected wave is not returned)

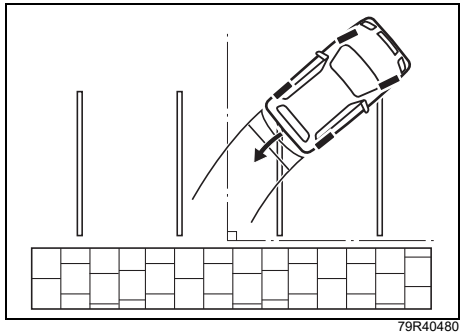

79R40480

- When an obstacle such as a wall is not in a vertical position of the vehicle
- A wall which is not in vertical position of the ground, a rough wall, a wall or shutter which has running wavy pattern
- A pole which is protruded from a wall or a pipe arrangement

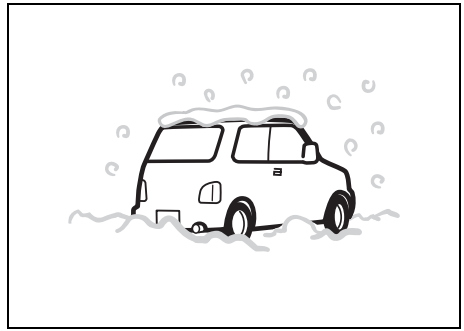

79R40470

- An object which easily absorbs sonic wave such as a person, a spongy object or a snow wall
- A moving object such as a pedestrian, a bicycle or an animal
- An object which suddenly rushes out into the traveling direction of the vehicle (while or immediately after the vehicle is turning around)
- The ultrasonic sensor may not detect the following obstacles:
  - An obstacle in the shape of pole such as a sign or a street lamp
  - A low-height obstacle such as a guardrail
  - A small obstacle or a thin obstacle such as a chain or a rope
  - A micromesh fence

Parking sensors

69T050870

(1) Symbol representing an obstacle detected by parking sensor*

*This symbol shows that an obstacle is located on the right rear of vehicle.

- The parking sensor system uses ultrasonic sensors to detect obstacles near the rear bumper. If obstacles are sensed while you are parking or moving the vehicle slowly, the system warns you by sounding a buzzer and displaying symbols representing the obstacles on the information display in the instrument cluster.
- The system emits an ultrasonic wave and the relevant sensor detects the return of the wave reflected by an obstacle. The system measures the time taken by the ultrasonic wave to reach the obstacle and return from it, from which it determines the obstacle's position.
- The parking sensor function can be used when you press the engine switch to change the ignition mode to ON and the gearshift lever is in the "R" position. This function is helpful in the following cases: pulling over to the curb; parallel parking the vehicle; steering the vehicle into a garage; driving along an alley; and moving slowly in a place with obstacles.

⚠ WARNING

- **The parking sensor warns you of obstacles with buzzers and by showing you the location of the obstacles on the information display. However, you still have to drive with particular care.**
- **The sensors can detect obstacles only within a limited area and only when the vehicle is moving within a limited speed range. So, in tricky areas, you must move the vehicle slowly while checking around it using your direct vision or rearview mirrors. There is increased risk of an accident if you control the vehicle relying only on the parking sensor.**

Sensor locations

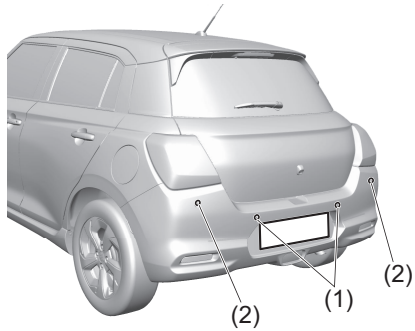

69T050730

(1) Rear center sensors (2 places)
(2) Rear corner sensors (2 places)

NOTICE

- **Avoid hitting the sensor areas or directing the nozzle of a high-pressure car washer onto the sensor areas. Otherwise, the sensors may be damaged.**
- **If the bumper hits a hard object, the sensors on it may not work properly. If this occurs, have the sensors inspected by an authorized SUZUKI dealer or a qualified workshop.**

Working sensors

The sensors work depending on the gearshift lever position and parking brake lever position as follows:

Gearshift lever position		Manual transmission		CVT		Parking brake lever
		R	N, 1st – 5th	R	N, D, M or L	
Rear sensors	Center	On	Off	On	Off	No relation
	Corner	On	Off	On	Off	No relation

Approximate areas where obstacles can be detected

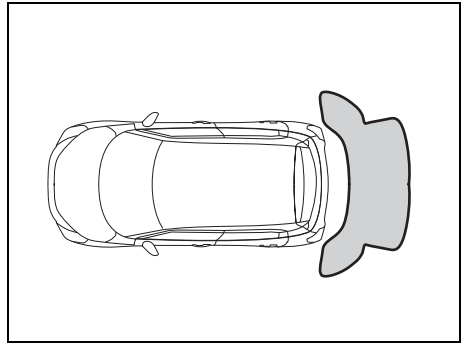

69T050740

- An obstacle within about 20 cm (8 in) from a sensor or just below a sensor is not detectable.
- The detection distance of rear corner sensors is within about 60 cm (2.0 ft).
- The detection distance of rear center sensors is about 150 cm (4.9 ft).

⚠ WARNING

- **Under the following conditions, the parking sensor system may not work normally because the sensors cannot detect obstacles correctly.**
  - **Sensors are covered with mud, ice or other materials. (Such materials must be removed for normal operation.)**
  - **Sensors are wet from water splashes or heavy rain.**
  - **Sensors are covered by a hand, sticker, accessory, etc.**
  - **There is an accessory or other object attached within the sensor's sensing area.**
  - **Items such as tow hooks, commercially available corner poles, radio antenna, etc. are installed on the bumper.**
  - **The height of the bumper is changed due to alteration to the suspension or other causes.**
  - **The sensor areas are extremely hot from direct sunlight or cold due to freezing weather.**
  - **The vehicle is on a rough surface, slope, gravel road or grass field.**
  - **The vehicle is at a steep angle.**

(Continued)

⚠ WARNING

(Continued)

  - **Sensors have intercepted ultrasonic noise from another vehicle's horn, engine, air braking system (large vehicles), or parking sensor.**
  - **Obstacles are too close to the sensors.**
  - **Sensors are at an angle to a highly reflective object such as glass. (Ultrasonic waves are not reflected back from the obstacle.)**
- **Sensors may not be able to correctly detect the following types of obstacles:**
  - **Objects made of a thin material such as wire netting and ropes**
  - **Square-shaped curbstones or other objects with sharp edges**
  - **Tall objects with a large upper part such as a road sign**
  - **Low-profile objects such as curbstones**
  - **Sound-absorbing objects such as cotton and snow**

NOTE:

- *Thin poles or obstacles lower than the sensors may become undetectable as the vehicle moves closer to them even if they have been detected from longer distances.*
- *The system may calculate the distance to a road sign or similar obstacle to be shorter than the actual distance.*

Obstacle indication by parking sensor

69T050820

(1) Obstacle detected by rear center sensors
(2) Obstacle detected by rear corner sensors

Upon detecting an obstacle, the parking sensor causes an interior buzzer to sound and a symbol representing the obstacle appears on the information display and the parking sensor indicator light blinks.

- A different symbol is displayed depending on the direction and distance of the obstacle.
- A buzzer located behind the rear seat sounds when a sensor at the rear detects an obstacle.
- Warnings when obstacles are detected by rear sensors

Distance (approx.)		Buzzer	Information display
center sensors	60 – 150 cm (24 – 59 in)	Short beeps at long intervals	
45 – 60 cm (18 – 24 in)		Short beeps at short intervals	
35 – 45 cm (14 – 18 in)		Short beeps at very short intervals	
Less than 35 cm (14 in)		Continuous beep	

NOTICE

- **If anything other than the buzzer explained in above table sounds, the sensor may be failure. Consult an authorized SUZUKI dealer or qualified workshop.**
- **If there is a malfunction of the parking sensor, the indicator light of the parking sensor buzzer OFF switch will not come on. If the indicator light of the parking sensor buzzer OFF switch does not come on, consult an authorized SUZUKI dealer or qualified workshop.**

NOTE:
- *Symbols are displayed with a short delay after the detection of obstacles.*
- *If the system detects multiple obstacles simultaneously, the display shows all of their positions using the corresponding symbols. However, the buzzers will sound only for the nearest obstacles.*
- *Even in places where the buzzer always sounds when an obstacle is detected, the buzzer may not sound depending on the situation.*
- *When the parking sensor detects an obstacle while it is operating, the parking sensor indicator light will blink.*

Warning and indicator messages

If there is a problem or warning regarding the parking sensor system, a message is displayed on the information display in the instrument cluster, and a symbol blinks. If a message is displayed, follow its instruction.

Indicator	Message	Symbol	Probable cause and remedy
	“SERVICE PARKING SENSORS”	Not displayed	There may be a problem with the parking sensor system. Have your vehicle inspected by an authorized SUZUKI dealer or a qualified workshop.
	“CLEAN PARKING SENSORS”	One blinking line in a sensor location.	The indicated sensor is contaminated. Wipe it clean with a soft cloth.

Situations where the parking sensor system does not activate

Under the following situations, the parking sensor system does not activate properly.
- For few seconds immediately after changing the ignition mode to ON
- For CVT vehicle:
  – When the gearshift lever is in “P”, “N”, “D”, “M” or “L” position
  – When the position of the gearshift lever does not match the selector position shown in the information display, or when “–” is displayed
- For Manual transmission vehicle:
  – When the gearshift lever is in a position other than “R” position
  – When the “R” (reverse gear) indicator light does not come on even if the gearshift lever is shifted into “R” position
- When an obstacle cannot be detected
- When the parking sensor system is temporarily stopped or malfunctioning
  – For details, refer to “Temporary stop of the ultrasonic sensor” (P.5-133) and “Failure of the ultrasonic sensor” (P.5-134) in this section.

Parking sensor buzzer OFF switch

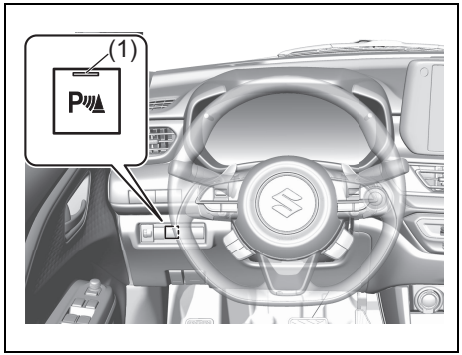

69T050750

If you press the parking sensor buzzer OFF switch when the interior buzzer sounds after detecting an obstacle, the buzzer will be temporarily stopped. The parking sensor buzzer OFF switch indicator light (1) goes out when the parking sensor buzzer is paused.
While the parking sensor buzzer is suspended, the buzzer will sound again under the following conditions.

- When the parking sensor buzzer OFF switch is pressed again
- Manual transmission vehicle:
  When you shift into R position from a position other than R
- CVT vehicle:
  When you shift the gearshift lever from a position other than R to R

NOTE:
Depending on the surrounding conditions, the parking sensor buzzer may sound again when an obstacle is detected while the buzzer is temporarily stopped.

Driver Monitoring System (DMS) (if equipped)

DMS stands for Driver Monitoring System. The driver monitoring system camera detects the opening and closing of the driver's eyes and the direction of the driver's face etc. If the system determines that the driver is sleepy, dozing or looking aside during driving, it will alert the driver with a warning light, a message in the information display and a warning buzzer.

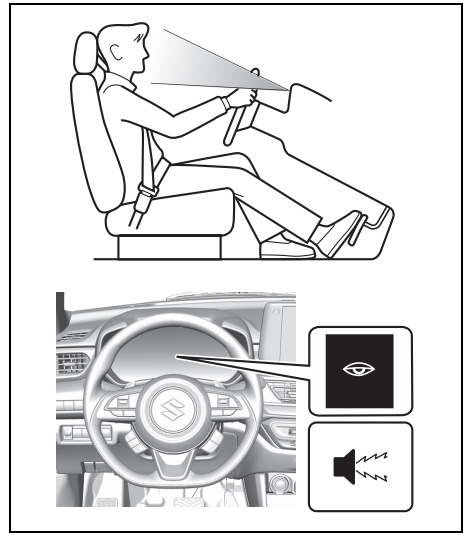

69T050220

Sensors which detect the driver condition

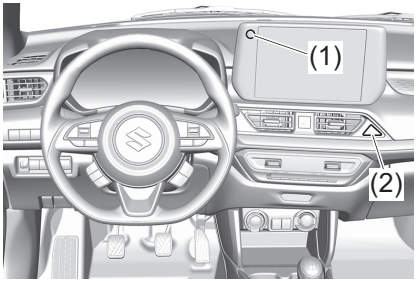

69T050800

(1) Driver monitoring system camera
(2) Driver monitoring system LED

⚠ WARNING

As there is a limit to the degree of recognition performance that this system can provide, do not overly on this system.

- **If you feel tired before or during driving, take a break and sleep as necessary in order to ensure safe driving.**
- **DMS does not eliminate driver drowsiness.**

(Continued)

⚠ WARNING

(Continued)

- **DMS does not forestall driver's careless behavior.**
- **In some situations, DMS may not be able to properly detect the driver's condition.**

NOTE:
DMS recognizes features such as the position of the driver's eyes, nose, mouth and head by using the camera.
It may not function properly when features such as the position of the eyes, nose, mouth and head cannot be recognized. Adjust the seat and steering wheel position to adopt the correct driving posture.

Asleep at the wheel warning

When the DMS detects the driver's eyes being closed, blinking and increasing yawning etc. while driving at speeds of approximately 65 km/h (40 mph) or more, it warns the driver with an alarm if the system determines that the driver feels drowsy.

- When the asleep at the wheel warning is activated, the drowsy warning light will come on, the asleep at the wheel warning in the information display will appear and the interior buzzer will beep to warn the driver.

NOTE:
Even if the driver feels awake, if there is still a suspicion of drowsiness, the warning signal may be operated every few minutes.
If the vehicle speed exceeds 65 km/h (40 mph) or more while the driver is suspected to be sleepy, the warning signal may be operated each time. In such cases, it is recommended to take a break as soon as possible.
After the asleep at the wheel warning is activated, the DMS alert will not be activated for about five minutes.

Drowsiness warning

If the DMS detects the driver's eyes being closed or inclination of neck while driving at approximately 65 km/h (40 mph) or more, it will warn the driver with a warning signal.

- When the drowsiness warning is activated, the drowsy warning light will come on, the drowsiness warning in the information display will appear and the interior buzzer will beep to warn the driver.
- The drowsiness warning continues to warn until DMS determines that the driver has awakened from a doze.

NOTE:
After the drowsiness warning is activated, the DMS alert will not be activated for about five minutes.

Distracted driving warning

If the DMS detects the driver's gaze or the direction of his/her face while driving at speeds of approximately 20 km/h (12 mph) or more and determines that the driver is looking aside, the DMS warns the driver with a warning signal.

- When the distracted driving warning is activated, the distracted driving warning in the information display will appear and the interior buzzer will beep to warn the driver.

NOTE:

- *The inattentive driving alert does not work when the turn signal indicator and hazard warning lights are activated.*
- *The inattentive driving alert does not work when the gearshift lever is in "R" position.*
- *If any of the following conditions are met, the inattentive driving alert may not work properly:*
  - *When the vehicle's direction and gaze are very different, such as a curve with small curvature or a roundabout*
  - *When the gaze and the direction of the face are very different*
  - *When the driver frequently turn his/her face or gaze away from the front*
  - *When the driver is inclining his/her face widely*
  - *When the driver is moving widely*

After the inattentive driving alert is activated, the DMS alert will not be activated for about five minutes.

ON/OFF setting of alert

DMS alerts can be turned off.

You can select the driver monitoring system through the setting mode of information display and turn the alert on or off. Refer to the "Setting mode of information display" (P.12-8).

When the alert is set to OFF, the Driver Monitoring System (DMS) OFF indicator light comes on.

NOTE:

In the following situations, DMS alerts are turned on automatically:

- *When the engine switch is pressed to change the ignition mode from LOCK (OFF) to ON*
- *When the driver's seat belt is unfastened and the driver's door is opened*
- *When the default setting is selected by the setting mode of information display*

Situations in which the driver monitoring system may not operate properly

In situations such as the following, the driver monitoring system camera may not be able to detect the driver's face, and the function may not operate properly.

- When the driver monitoring system camera is in situations where it is difficult to capture images properly
  - When the inside of the vehicle is hot
  - When a very bright light, such as the sun or the headlights, shines onto the driver monitoring system camera or driver's face
  - When the brightness inside the vehicle changes frequently due to the shadows of surrounding structures, etc.
- When the outline of the driver's eyes, nose, mouth or face is difficult to see from the driver monitoring system camera
  - When the lenses of glasses or sunglasses look like they are gleaming, or the view outside of the vehicle is reflected
  - When the driver monitoring system camera, driver's face and LED are being blocked by the steering wheel, a hand holding the steering wheel, an arm, etc.
  - When there is dirt or fingerprints etc. on the driver monitoring system camera lens or LED

– When wearing a hat, sun visor, etc. low over driver's eyes
– When wearing thick glasses that make driver's eyes look distorted
– When the driver is wearing glasses or sunglasses that are not easily transparent to near-infrared light
– When the driver’s eyes are blocked by the frame of glasses, sunglasses, hair, etc.
– When the driver is wearing a hat or helmet, etc.
– When the driver is wearing an eyepatch
– When your bangs are on your eyes
– When the driver is wearing a face mask
– When the driver is wearing makeup or paint etc. which makes it difficult to detect their eyes, nose, mouth, or shape of their face
– When the outline of the mouth is obscured by the whiskers
– When the driver is inclining his/her head widely
– When the driver is not in the right driving position
– When the driver is laughing or their eyes are only slightly open
– When there are multiple faces in the detection range of the driver monitoring system camera, such as when a front or rear passenger is leaning toward the driver’s seat
– When there is a device inside the vehicle that radiates near infrared rays, such as a non-genuine driver monitoring system

When DMS has an abnormality

If the DMS is stopped temporarily, the Driver Monitoring System (DMS) OFF indicator light comes on.
If the DMS has an abnormality, the Driver Monitoring System (DMS) OFF indicator light and master warning indicator light will blink, “DRIVER MONITOR SYSTEM MALFUNCTION” will appear on the information display and the interior buzzer will sound.

NOTE:
- *In the following situation the DMS will be stopped temporarily.*
  – *When the temperature of the DMS body is high or low*
  – *When the temperature of the driver monitoring system camera is high or low*
  – *When the position of the driver's eyes, nose, mouth or face are not detected properly*

When the situations are improved, DMS will be unsuspended

- *If there is something wrong with the DMS, consult an authorized SUZUKI dealer or a qualified workshop for inspection.*

DMS camera and LED

NOTE:
For proper operation of the DMS, observe the following:
- *Do not attach accessories, stickers (including transparent stickers), etc. to the driver monitoring system camera and LED or its surrounding area.*
- *Keep the lens of the driver monitoring system camera and LED free from damage.*
- *Do not touch the lens of the driver monitoring system camera or allow it to become dirty. If dirt or fingerprints attach to them, wipe it off with a soft dry cloth or lightly wipe it off with a cloth that has been wrung hard.*
- *Do not subject the driver monitoring system camera and LED or its surrounding area to strong impact.*

Open source software (OSS)

DMS includes software (OSS) that uses open source.
For details about the license information, refer to the following website.
http://www.embedded-carmultimedia.jp/RTOS/License/oss/DMS_0601/

Rearview camera (if equipped)

When the gearshift lever is shifted to “R” position while the ignition mode is ON, the rearview camera system automatically shows the view behind the vehicle on the display.

⚠ WARNING

The distance viewed in the rearview camera may differ from the actual distance according to the condition of road or the load the vehicle is carrying. Since the camera display area is also limited, backing up by only looking at the display may cause an accident or a collision with an object. The rearview camera cannot replace the driver’s attention. The driver alone is responsible for parking and similar driving maneuvers.

- **Use the rearview camera only to provide driving assistance.**
- **Always drive carefully confirming the safety of the rear and the surrounding conditions by looking directly with your eyes and using the rearview mirror.**
- **Check that the tailgate is securely closed when backing up.**

NOTICE

If you use the rearview camera for a long time when the ignition mode is ON, but the engine is not running, the lead-acid battery may discharge.
Do not leave the ignition mode ON for a long time when the engine is not running.

Rearview camera location

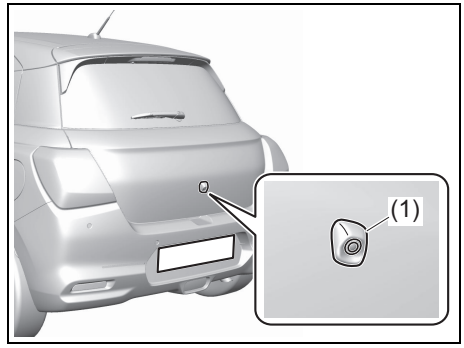

69T050340

(1) Rearview camera

The rearview camera is installed on the tailgate.

NOTICE

- **The rearview camera is a precision instrument. If you strike the camera, it may be broken and cause damage resulting in a catch fire or a malfunction.**
  - **Do not strike the camera.**
  - **Do not remove snow or mud on the camera lens with a stick.**

(Continued)

NOTICE

(Continued)

- **If water enters the rearview camera, it may cause a malfunction or catch fire.**
  Do not use high pressure water around the camera.
- **This lens is hard coated to prevent damage or discoloration. Damage or discoloration of lens may obscure the image.**
  - **Do not use a brush to clean lens.**
  - **Do not use alcohol, benzene or thinner to clean the lens.**
  - **Do not use wax on the camera lens.**

NOTE:
If body wax gets on the camera lens, wipe off the wax with a clean cloth dampened with mild detergent diluted with water, and then wipe the lens with a dry cloth.

How to use rearview camera

1) Press the engine switch to change the ignition mode to ON.
2) Shift the gearshift lever in “R” position.
   - The display automatically shows the view behind the vehicle.
   - When the gearshift lever is shifted from “R” to another gearshift lever position, the display returns to the previous display.

NOTE:
The rearview camera display has first priority in any display mode. However, the rearview camera display does not show the rear view while the system is initializing.

Display range of rearview camera

The rearview camera display shows the area behind the rear end of the bumper. The display cannot show objects which are close to the bumper or under the bumper.
The rearview camera display cannot show obstacles which are higher than the camera. Upper parts of tall objects such as road signs cannot be viewed on the display.

Display range of rearview camera

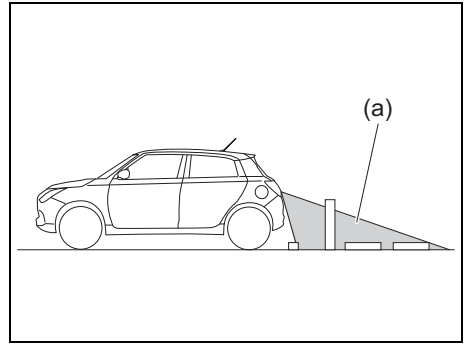

69T050350

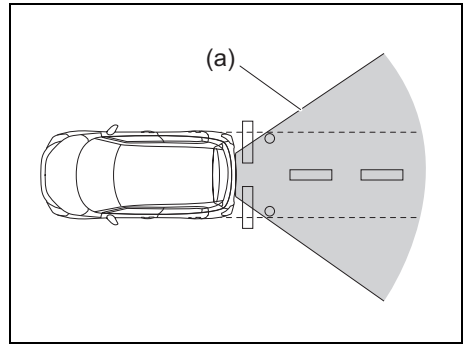

69T050360

(a) Display range

NOTE:
- *Images shown on the display from the rearview camera are reversed images (mirror images).*
- *The colors of objects on the rearview camera may differ from the actual object colors.*
- *The rearview camera display may be difficult to see under the following conditions, but this is not a system malfunction.*
  - *In dark areas, on a rainy day or at night.*
  - *When the temperature around the lens is too high/low, or the camera is wet such as on a rainy day or during periods of high humidity (dew condensation may occur on the camera lens).*
  - *When a foreign object such as mud or a drop of water is stuck around the camera lens.*
  - *When strong light directly enters the camera (vertical lines may be seen on the display).*
  - *Under fluorescent light. (The display may flicker.)*
  - *When the outside temperature is low (the image on the display may be darkened).*

Rearview camera screen indication
The distance viewed in the rearview camera may differ from the actual distance according to the condition of the road or the load the vehicle is carrying.

Uphill incline behind the vehicle

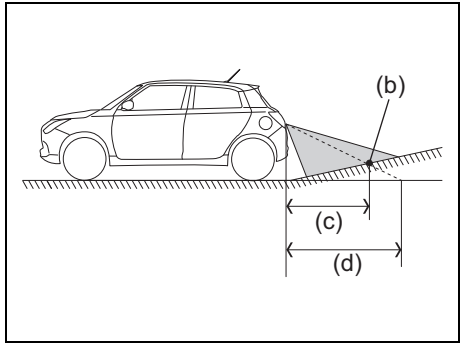

69T050370

(b) Object
(c) Actual distance
(d) Distance on the display

When there is an uphill incline behind the vehicle, the object shown on the display appears farther away than the actual distance.

Downhill incline behind the vehicle

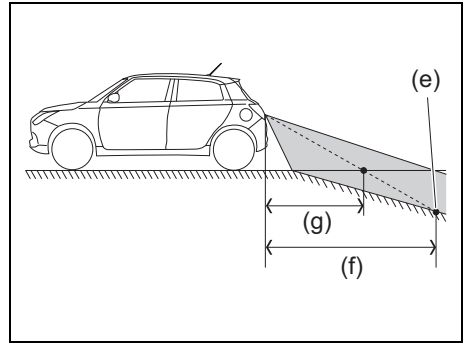

69T050380

(e) Object
(f) Actual distance
(g) Distance on the display

When there is a downhill incline behind the vehicle, the object shown on the display appears closer than the actual distance.

If the rear view from the rearview camera is not shown or there is a poor image

- If the rear view from the rearview camera is not shown.
  - Check that the ignition mode is ON.
  - Check that the gearshift lever is shifted to “R” position.

- If the image from the rearview camera is poor.
  - Check that the camera lens is not dirty.
  - Check that light from the sun or the beam of the headlights from the vehicle behind is not shining directly into the lens.

If the rearview camera system is still not working properly after checking the above, have the system inspected by an authorized SUZUKI dealer or a qualified workshop as soon as possible.

Electronic Stability Program (ESP®)

ESP® is a registered trademark of Mercedes-Benz Group AG.

The Electronic Stability Program (ESP®) helps to control the vehicle during cornering if front wheels or rear wheels skid. It also assists you in maintaining traction while accelerating on loose or slippery road surfaces. It does this by regulating the engine’s output, and by selectively applying the brakes. In addition, ESP® helps to avoid skidding by controlling braking pressure.

⚠ WARNING

The ESP® cannot enhance the vehicle’s driving stability in all situations and does not control your vehicle’s entire braking system. The ESP® cannot prevent accidents, including those resulting from excessive speed in turns, or hydroplaning. Only safe and attentive drive can prevent accidents.
The capabilities of an ESP®-equipped vehicle must never be used as a substitute for careful driving.

NOTE:
You may hear an operation sound when you start the engine or after the vehicle begins to move. This means that the ESP® systems are in the self-check mode. This sound does not indicate a malfunction.

The ESP® has the following systems:

Anti-lock Brake System (ABS)

Refer to “Anti-lock Brake System (ABS)” (P.5-153).

Brake assist system

Refer to “Brake assist system” (P.5-153).

Traction control system

The traction control system automatically helps prevent the spinning of wheels when the vehicle is started or accelerated on slippery road surfaces. The system operates only if it senses that some of the wheels are spinning or beginning to lose traction. When this happens, the system operates the front or rear brakes and reduces engine power to limit wheel spin.

Stability control system

The vehicle stability control system helps provide integrated control of systems such as anti-lock brakes, traction control, engine control, etc. This system automatically controls the brakes and engine to help prevent the vehicle from skidding when cornering on a slippery road surface or when turning the steering wheel abruptly.

⚠ WARNING

Always check the surrounding conditions and drive the vehicle in a safe manner, as controlling the vehicle by ESP® has limits and ESP® may not function properly depending on the surrounding conditions.

⚠ CAUTION

- **Observe the following points. Otherwise, ESP® may not operate properly or it may result in a malfunction.**
  - **Adjust the tyre pressure as specified.**
  - **When replacing tyres, use the same tyres with the size, type, and tread patterns.**
  - **Do not use the tyres which have excessively worn conditions.**
  - **Do not modify the suspension or the brake and do not change vehicle height or suspension hardness.**
  - **Do not drive the vehicle with suspension or brake excessively deteriorated.**
  - **Do not modify the engine or the muffler.**
  - **Do not install LSD (limited slip differential).**
- **When you install the snow chains, ESP® may not operate properly.**
- **The ESP® is not a substitute for winter tyres or tyre chains on a snow-covered road**

NOTE:

- *If you perform the following operations, you may hear an operation sound or a clicking sound. This means that the ESP® system is in the self-check mode and this does not indicate a malfunction.*
  - *When pressing the engine switch to change the ignition mode to ON*
  - *When releasing your foot from the brake pedal, after pressing the engine switch to change the ignition mode to ON with the brake pedal depressed*
  - *When starting the engine*
  - *When starting the vehicle after starting the engine*
- *When engine revolutions is high and ESP® operates, you may feel the change of engine revolutions or vibration of vehicle body. However, this is normal.*

ESP® indicator light

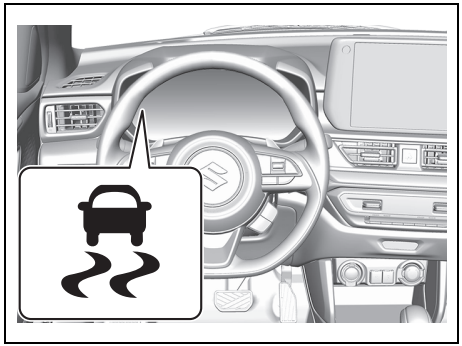

52KM133

This light blinks 5 times per second when one of the following systems is activated.
- Stability control system
- Traction control system

If this light blinks, drive carefully.

When the engine switch is pressed to change the ignition mode to ON, this light comes on briefly so you can check that the light is working.

NOTICE

If the ESP® warning light comes on and stays on while driving, there may be a malfunction of the ESP® systems (other than ABS). You should have the systems inspected by an authorized SUZUKI dealer or a qualified workshop.

NOTE:
When the ESP® indicator light comes on and stays on while driving, indicating a malfunction of the ESP® systems (other than ABS), the brake system will function as an ordinary ABS with no additional ESP® functions.

ESP® OFF switch

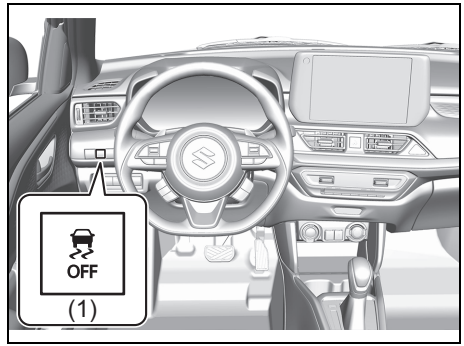

69T051000

(1) ESP® OFF switch

When the ESP® OFF switch located at the instrument panel is pushed and held to turn off the ESP® systems (other than ABS), the ESP® OFF indicator light in the instrument cluster comes on.
When you have turned the ESP® systems (other than ABS) off, turn them back on before resuming ordinary driving.
When you push the ESP® OFF switch again, the ESP® OFF indicator light will go out and all of the ESP® systems will be activated.

69T040260

"SERVICE
ESP SYSTEM"

If the message shown in the above illustration appears on the information display, there may be a problem with the ESP® system. Have your vehicle inspected by an authorized SUZUKI dealer or a qualified workshop.

NOTE:
- *The ESP® system will not activate while this message is displayed.*
- *If your vehicle is equipped with the Dual Sensor Brake Support II (DSBS II) system, when the ESP® system is turned off, Dual Sensor Brake Support II (DSBS II) system, lane departure warning, lane departure prevention, lane keep assist, vehicle swaying warning and traffic sign recognition will be turned off. (High beam assist and lane departure prevention do not turn off.)*

ESP® OFF indicator light

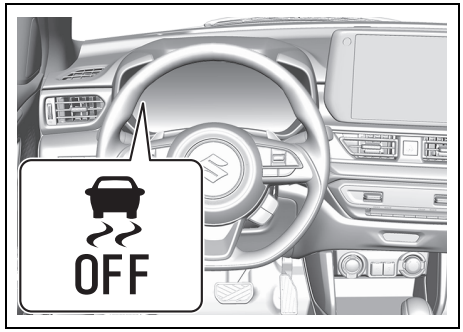

69T051020

You should turn the ESP® on during your ordinary driving, so that you have the benefits of all of the ESP® systems.

It may be required to turn the ESP® systems (other than ABS) off if your vehicle is stuck in sand, mud, or snow, where wheel spin is necessary.

Hill hold control system

The hill hold control system is designed to assist you in starting to move up hills. When you start to move up a hill, the system helps to prevent the vehicle from rolling downward (for approximately 2 seconds) while you move your foot from the brake pedal to the accelerator pedal.

⚠ WARNING

- **Do not rely excessively on the hill hold control system. The hill hold control system may not prevent the vehicle from rolling downward on a hill under all load or road conditions. Always be prepared to depress the brake pedal to prevent the vehicle from rolling downward. Failure to pay attention and depress the brake pedal to hold the vehicle on a hill when necessary, may result in loss of control or an accident.**
- **The hill hold control system is not designed to stop the vehicle on a hill.**

(Continued)

⚠ WARNING

(Continued)

- **After you release your foot from the brake pedal, accelerate the vehicle to move up immediately. If you release your foot from the brake pedal over 2 seconds, the hill hold control system will be canceled. If so, the vehicle may roll downward, which can result in an accident depending on the degree of slope. And, the engine may stall and the power assist for the steering and brakes will not work so steering and braking will be much harder than usual which can result in an accident or vehicle damage.**
- **If you drive on the steep slope, the gravel, the snow-covered road, or the muddy road and the hill hold control system is activated, there may be a possibility that the wheels will be locked and then the vehicle may lose the control.**

The hill hold control system activates for a maximum of about 2 seconds if your foot is moved from the brake pedal when the following conditions are all met.

1) The gearshift lever is in a forward gear or reverse gear.
2) The parking brake is released.
3) The vehicle is on an upward incline.

(Except for manual transmission model)
On model equipped with the ENG A-STOP system, the hill hold control system is activated when the engine is restarted after being stopped automatically, even if the previous conditions are not met.

NOTE:
When the hill hold control system is activated, the following conditions may be found, but this is not a malfunction.

- You may hear a sound from the engine room.
- As brake pedal becomes heavy, it may be difficult for you to depress it.

69T040260

"HILL HOLD DISABLE"

If the message shown in the above illustration appears on the information display, there may be a problem with the hill hold control system. Have your vehicle inspected by an authorized SUZUKI dealer or a qualified workshop.

NOTE:
The hill hold control system will not activate while this message is displayed.

Braking

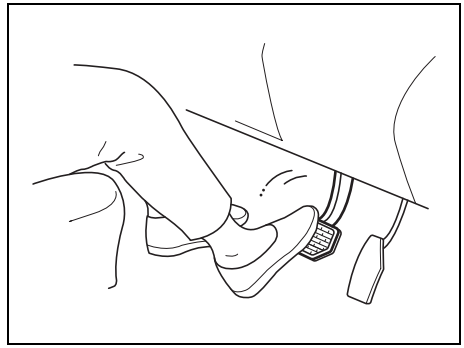

59RN05770

The distance needed to bring any vehicle to a halt increases with the speed of the vehicle. The braking distance needed, for example, at 60 km/h (37 mph) will be approximately 4 times greater than the braking distance needed at 30 km/h (19 mph). Start to depress the brake pedal when there is plenty of distance between your vehicle and the stopping point, and slow down gradually.

⚠ WARNING

If water gets into the brake devices, brake performance may become poor and unpredictable. After driving through water or washing the underside of the vehicle, test the brakes while driving at a slow speed to see if they have maintained their normal effectiveness. If the brakes are less effective than normal, dry them by repeatedly applying the brakes while driving slowly until the brakes have regained their normal effectiveness.

Power-assisted brakes

Your vehicle has power-assisted brakes. If power assistance is lost due to a stalled engine or other failures, the system is still fully operational on reserve power and you can bring the vehicle to a complete stop by pressing the brake pedal once and holding it down. The reserve power is partly used up when you depress the brake pedal and reduces each time the pedal is pressed. Apply smooth and even pressure to the pedal. Do not pump the pedal.

⚠ WARNING

Even without reserve power in the brake system, you can still stop the vehicle by pressing the brake pedal harder than normally required. However, the stopping distance may be longer.

Brake assist system

When you slam the brakes on, the brake assist system determines it to be an emergency stop and provides more powerful braking for a driver who cannot hold down the brake pedal firmly.

NOTE:
If you quickly and forcefully depress the brakes, you may hear clicking sound by the brake assist system operation. This is normal and indicates that the brake assist system is activated properly.

Anti-lock Brake System (ABS)

ABS will help you avoid skidding by electronically controlling braking pressure. It will also help you maintain steering control when braking on slippery surfaces or when braking hard.
The ABS works automatically, so you do not need any special braking technique. Just push the brake pedal down without pumping. The ABS will operate whenever it senses that the wheels are locking up. You may feel the brake pedal move a little while the ABS is operating.

⚠ WARNING

- **Always check the surrounding conditions and drive the vehicle in a safe manner, as controlling the vehicle by ABS has limits and the system may not function properly depending on the surrounding conditions.**
- **If tyre grip performance is over the limit or hydroplaning occurs, ABS cannot work properly.**

NOTE:
- *If the ABS system is activated, you may hear a clunking noise and/or feel pulsating in the brake pedal. This is normal and indicates that the brake fluid pressure is being controlled properly.*

- *You may hear an operation sound when you start the engine or after the vehicle begins to move. This means that the above systems are in the self-check mode. This sound does not indicate a malfunction.*

Braking distance

ABS is not designed to shorten the stopping distance.

⚠ WARNING

- **In the following situations, the braking distance required for a vehicle with ABS may be slightly greater than the one required for a vehicle without ABS, resulting in an accident. Drive the vehicle slowly and maintain ample distance between your vehicle and the vehicle in front of you.**
  - **When driving on rough roads such as unpaved or stone-paved roads**
  - **When driving on gravel roads or fresh snow roads**
  - **When driving over bumps on the roads such as joint seams**
  - **When passing over metal plates such as manholes**
  - **When snow chains are installed**

NOTE:

- *When applying sudden brake or applying brake on slippery roads, the braking distance required for a vehicle with ABS is almost the same as the one required for a vehicle without ABS.*
- *If you would like to suddenly apply brake, just push the brake pedal down firmly without pumping. Otherwise, the longer braking distance will be required.*
- *The ABS will not work if vehicle speed is under about 9 km/h (6 mph). This depends on the road conditions.*

Vibration and Sound during ABS Operation

When strongly depressing the brake pedal, you might feel vibration of the brake pedal, the steering wheel, and the vehicle body. This is due to ABS operation, and does not indicate a malfunction; continue strongly depressing the brake pedal at this time.

NOTE:
Immediately after starting the engine and beginning to drive, you might temporarily hear a motor sound. This means that the systems are in self-check mode. This sound does not indicate a malfunction.

Tyres

⚠ WARNING

ABS detects each wheel rotation speed via a sensor. If tyres or wheels other than those specified in the owner's manual are used for size, type, tread pattern, or if worn conditions of tyres are different, the correct wheel rotation speed cannot be detected and ABS will not work properly. This may result in an accident.
When replacing tyres, use the tyres with the size, type, and tread patterns which are specified in this owner's manual.
Also, do not use the tyres which are excessively worn.

Situations where ABS may activate by chance when applying brake

- When driving on slippery roads

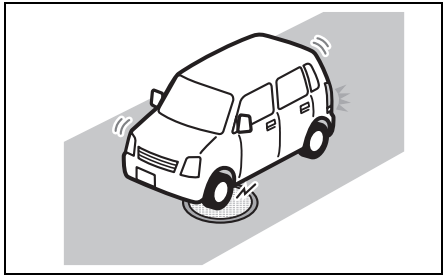

69RHS150

– Manholes

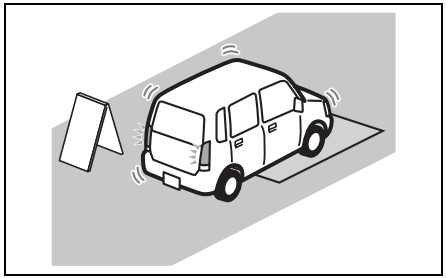

69RHS151

– Metal plates in construction zones

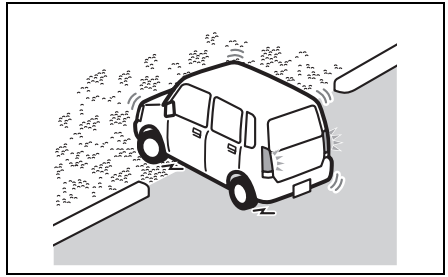

69RHS152

– Gravel roads

- When driving over joints in roads and other height differences

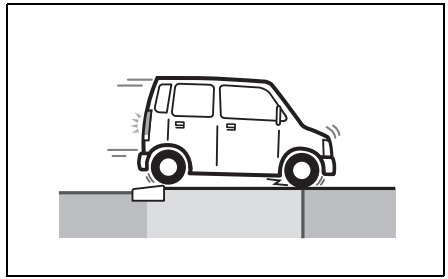

69RHS153

– Joints in roads

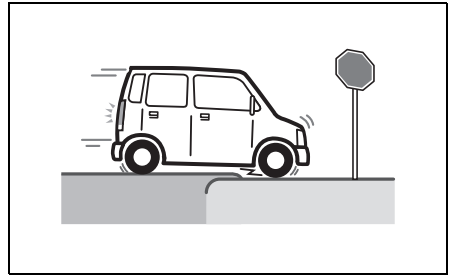

69T050970

– Height differences in roads

- When driving on rough roads

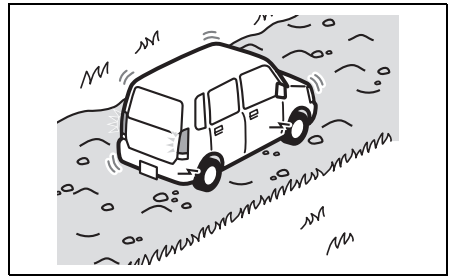

69RHS155

– Bumpy roads

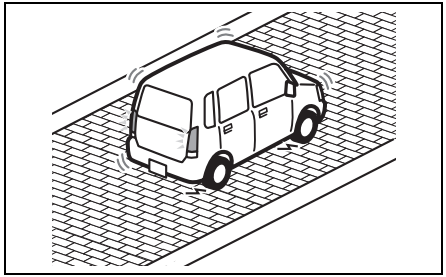

69RHS156

– Cobblestone

ABS warning light

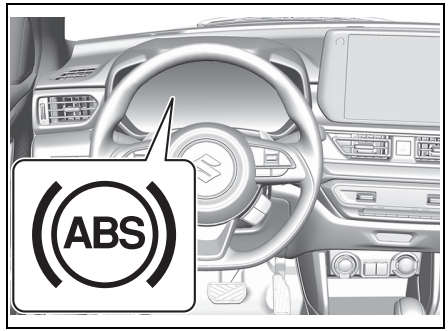

69T051040

If there is a problem in the ABS system with the engine switch in ON mode, this light will come on.

Emergency Stop Signal (ESS)

ESS is a feature that gives a warning to a following vehicle by flashing all turn signal lights faster than usual if all the following conditions are met. Also, within these conditions, it will flash along with your turn signal in the instrument cluster.

- When you slam down on the brakes at speeds of approximately 55 km/h (34 mph) or over
- When the ABS is activated or when you apply sudden brake, which is similar conditions for activating the ABS

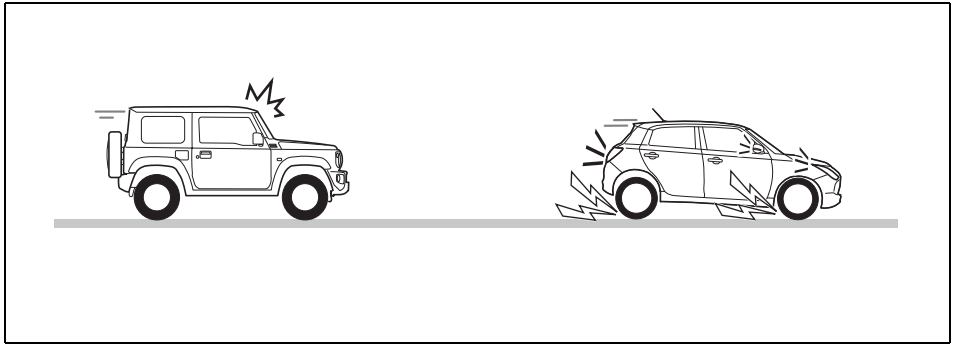

69T051050

The ESS will stop functioning in the following situations:

- When the vehicle is no longer rapidly decelerating
- When you release the brake
- When the ABS is no longer activated
- When you turn on the hazard warning switch

⚠ WARNING

Although the ESS is designed to reduce the number of rear-end collisions that occur from sudden braking, by warning a following vehicle, it cannot prevent all collisions. Always make an effort to drive safely and avoid unnecessary sudden braking when stopping or decelerating.

NOTE:

- *The ESS functions cannot be deactivated.*
- *Use of the hazard warning switch should be given preference over the ESS.*
- *When driving on the following surfaces and the ABS gives out momentarily, the ESS may not function.*
  - *When driving on slippery surfaces*
  - *When driving over bumps on the roads such as joint seams*

Tyre Pressure Monitoring System (TPMS) (if equipped)

The tyre pressure monitoring system is designed to alert you when one or more of the tyres on your vehicle is significantly under-inflated. The tyre pressure monitoring system (TPMS) sensor containing a unique identification code is mounted on each wheel. The TPMS sensors transmit tyre pressure signals to the receiver of the tyre pressure monitoring system controller. When the inflation pressure of one or more tyres indicates significant under-inflation, the low tyre pressure warning light comes on.

Low tyre pressure warning light

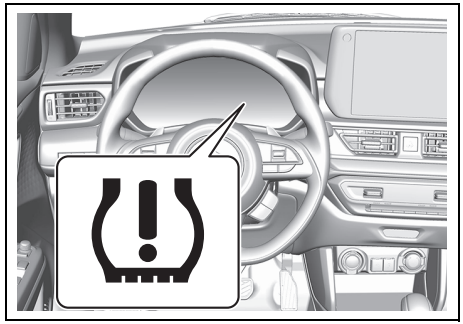

69T051070

Each tyre should be checked monthly when cold and inflated to the inflation pressure recommended by the vehicle manufacturer on the vehicle placard or tyre inflation pressure label. (If your vehicle has tyres of a different size than the size indicated on the vehicle placard or tyre inflation pressure label, you should determine the proper tyre inflation pressure for those tyres.)

As an added fuel efficiency feature, your vehicle has been equipped with a tyre pressure monitoring system (TPMS) that illuminates a low tyre pressure warning light when one or more of your tyres is significantly under-inflated.

Accordingly, when the low tyre pressure warning light illuminates, you should stop and check your tyres as soon as possible, and inflate them to the proper pressure.

Driving on a significantly under-inflated tyre causes the tyre to overheat and can lead to tyre failure. Under-inflation also reduces fuel efficiency and tyre tread life, and may affect the vehicle's handling and stopping ability.

Please note that the TPMS is not a substitute for proper tyre maintenance, and it is the driver's responsibility to maintain correct tyre pressure, even if under-inflation has not reached the level to trigger illumination of the TPMS low tyre pressure warning light.

⚠ WARNING

- **Relying only on the tyre pressure monitoring system to determine when it is necessary to add air to the tyres can result in loss of control or an accident.**
  Check tyre inflation pressures monthly when the tyres are cold. If necessary, adjust them to the recommended inflation pressure as specified on the vehicle's tyre information placard and in this owner's manual. Refer to "Tyres" (P.9-34).

(Continued)

⚠ WARNING

(Continued)

- **Failure to take corrective action when the low tyre pressure warning light is not working or when it comes on and blinks while driving can lead to an accident. If the low tyre pressure warning light does not come on for 2 seconds after the engine switch is pressed to change the ignition mode to ON, or comes on and blinks while driving, have your vehicle inspected by an authorized SUZUKI dealer or a qualified workshop. Even if the light turns off after blinking, indicating that the monitoring system has recovered, you should still have the system checked by an authorized SUZUKI dealer or a qualified workshop.**

(Continued)

⚠ WARNING

(Continued)

- **The load-carrying capacity of your tyres is reduced at lower inflation pressures. If your tyres are even moderately under-inflated, the load on the tyres may exceed the load-carrying capacity of the tyres, which could lead to tyre failure. The low tyre pressure warning light will not alert you to this condition, because it only comes on when one or more of your tyres becomes significantly under-inflated.**
  Check and adjust your tyre inflation pressure at least once a month. Refer to "Tyres" (P.9-34).

(Continued)

⚠ WARNING

(Continued)

- **Continuing to drive with the low tyre pressure warning light on can lead to an accident, resulting in severe injury or death.**
  If the low tyre pressure warning light comes on and stays on, reduce your speed and avoid abrupt steering and braking. Be aware that driving on a significantly under-inflated tyre can cause the tyre to overheat and can lead to tyre failure, and may affect steering control and brake effectiveness. Stop in a safe place as soon as possible and check your tyres.
  - **If you have a flat tyre, replace it with the spare tyre (if equipped). Refer to "Jacking instructions" (P.10-22) for the tyre replacement method. Also refer to "Replacing tyres and/or wheels" (P.5-166) for instructions on how to restore normal operation of the TPMS after you have had a flat tyre.**

(Continued)

⚠ WARNING

(Continued)

- **If your vehicle is equipped with a flat tyre repair kit instead of a spare tyre, refer to "Flat tyre repair kit (if equipped)" (P.10-27) for instructions on how to perform an emergency repair of a flat tyre.**
- **If one or more of your tyres is under-inflated, adjust the inflation pressure in all of your tyres to the recommended inflation pressure as soon as possible.**

The low tyre pressure warning light can come on due to normal causes such as natural air leakage and pressure changes caused by changes in temperature or atmospheric pressure. Adjusting the air pressure in the tyres to the pressure shown on the tyre information placard should cause the low tyre pressure warning light to turn off.

To make the low tyre pressure warning light go off, adjust the tyre pressures when the tyres are cold, and drive the vehicle for about 10 minutes.
When the adjusted tyre pressure is recognized, the low tyre pressure warning light will go off and the information display shows the current tyre pressure (if you select the TPMS monitor (if equipped)).

NOTICE

If the low tyre pressure warning light does not go off even when you drive for more than 10 minutes after adjusting the cold tyre pressure, there may be a problem with the TPMS. Have your vehicle inspected by an authorized SUZUKI dealer or a qualified workshop.

If the light turns on again shortly after adjusting the pressure in your tyres, you may have a flat tyre. If you have a flat tyre, replace it with the spare tyre (if equipped). Refer to "Jacking instructions" (P.10-22). Refer to "Replacing tyres and/or wheels" (P.5-166) for instructions on how to restore normal operation of the tyre pressure monitoring system after you have had a flat tyre.

69T051060

"LOW TIRE PRESSURE"

NOTE:

- *For a certain type of instrument cluster only, the information display shows the above warning and indicator message when this light comes on.*
- *When the tyre inflation pressure is adjusted in high altitude areas, the low tyre pressure warning light may not turn off even after tyre inflation pressure adjustment. In this case, adjust the inflation pressure to a slightly higher pressure than the one shown on the tyre information placard.*
- *The low tyre pressure warning light may turn off temporarily after coming on. This could be due to increase of surface temperature after long distance driving or traveling to a high temperature area. Even if the low tyre pressure warning light turns off after coming on, check the inflation pressure of all tyres.*

- *To reduce the chance that the low tyre pressure warning light will come on due to normal changes in temperature and atmospheric pressure, it is important to check and adjust the tyre pressures when the tyres are cold. If you check tyres after driving, they are warm. Even if the tyre pressure seems to be good in this condition, it could fall below the specified pressure when tyres cool down. Also, if tyres are inflated to the specified pressure in a warm garage, the tyre pressure could fall below the specified one when you drive the vehicle outside in very cold temperature. If you adjust the tyre pressure in a garage that is warmer than the outside temperature, you should add 1 kPa to the recommended cold tyre inflation pressure for every 0.8°C difference between garage temperature and outside temperature.*

TPMS malfunction indicator

Your vehicle has also been equipped with a TPMS malfunction indicator to indicate when the system is not operating properly.

The TPMS malfunction indicator is combined with the low tyre pressure warning light. When the system detects a malfunction, the low tyre pressure warning light will flash for about 75 seconds and then remain continuously illuminated. This sequence will continue upon subsequent vehicle start-ups as long as the malfunction exists.

The TPMS malfunction indicator is not reset even after the engine is turned off; it remains in the ON state until the normal conditions are restored.

When the malfunction indicator is illuminated, the system may not be able to detect or signal low tyre pressure as intended. TPMS malfunctions may occur for a variety of reasons, including the installation of replacement or alternate tyres or wheels on the vehicle that prevent the TPMS from functioning properly. Always check the low tyre pressure warning light after replacing one or more tyres or wheels on your vehicle to ensure the replacement or alternation of tyres and wheels to allow the TPMS to continue to function properly.

NOTICE

The tyre pressure sensors can be damaged if you do not take proper precautions.

- **We highly recommend that you have tyres repaired or replaced by an authorized SUZUKI dealer or a qualified workshop. The tyre pressure sensors can be damaged by installation or removal of tyres.**
- **Do not use liquid sealants for a flat tyre unless your vehicle is equipped with a flat tyre repair kit instead of a spare tyre.**

NOTICE

If the low tyre pressure warning light comes on frequently, there may be something wrong with one or more of the tyres, tyre pressure sensors or the monitoring system.
If the low tyre pressure warning light comes on frequently, have your vehicle inspected by an authorized SUZUKI dealer or a qualified workshop.

69T051060

"SERVICE
TPMS"

NOTE:
For a certain type of instrument cluster only, the information display shows the above warning and indicator message when this light comes on.

TPMS limitations

The tyre pressure monitoring system may not function properly under certain circumstances. In the following situations, the low tyre pressure warning light may come on and remain on or may blink.

- When you replace a flat tyre with the spare tyre.
- When you include a spare tyre during a tyre rotation.
- When the TPMS sensor is damaged during a tyre replacement or liquid sealants are used to repair a flat tyre.
- When the electronic signal of TPMS sensor is disturbed in one of the following ways:
  – Electric devices or facilities using similar radio wave frequencies are nearby.
  – A metallic film that may cause radio wave interference is attached on the window.
  – A lot of snow or ice covers the vehicle, in particular, around the wheels or wheel housings.
  – Snow tyres that are not installed with genuine TPMS sensors or tyre chains are used.
- When you use non-genuine SUZUKI wheels or tyres.
- When the pressure of any tyre is too high.
- When there is a problem with the receiver of the TPMS controller.

TPMS setting

- You can check the current tyre inflation pressure on the information display.
- You can set one of the initial value of tyre pressure below that is indicated on the tyre information label.
  – Comfort mode
  – Load mode

⚠ WARNING

If the loading weight has changed, adjust the tyre pressure according to the tyre information label and set the initial value via the information display. If the loading weight, tyre pressure and initial value do not match, the tyre pressure monitoring system will not function properly.

To check the current tyre inflation pressure

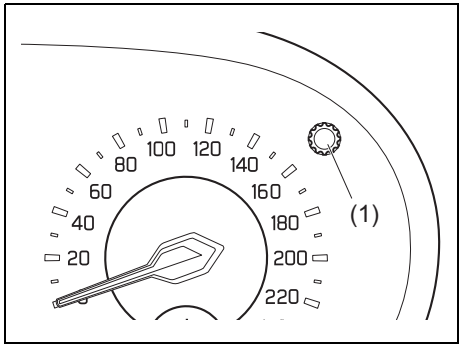

69T051510

1) When the ignition mode is ON and the vehicle is stationary, push and hold the indicator selector knob (1) on the instrument cluster for more than 3 seconds to change the information display to the setting mode.

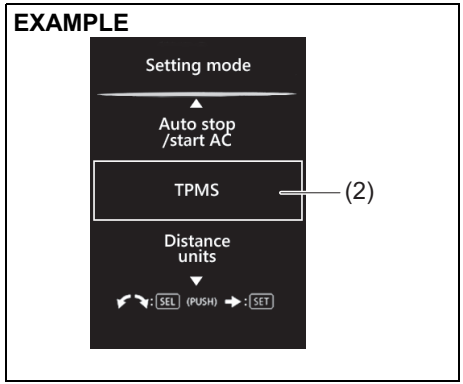

69T051100

(2) TPMS

2) Turn the indicator selector knob (1) left or right to select “TPMS” and push the indicator selector knob.

NOTE:
If you exit the setting mode, select “Back” and push the indicator selector knob (1).

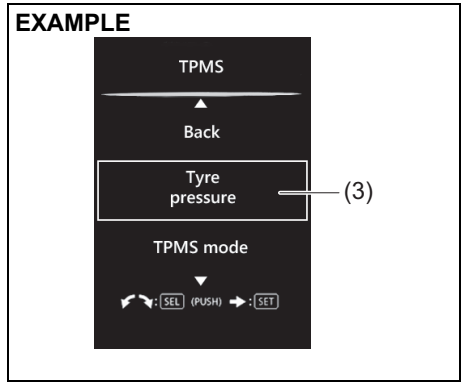

69T051110

(3) Tyre pressure

3) Turn the indicator selector knob (1) left or right to select “Tyre pressure” and push the indicator selector knob.

EXAMPLE

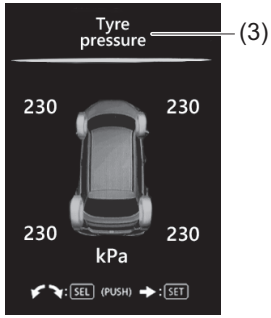

69T051090

(3) Tyre pressure

4) The display shows current tyre inflation pressure.

NOTE:

- *If the low tyre pressure warning light comes on, the information display will be switched to "Tyre Pressure" display and the corresponding tyre pressure indication blinks to alert you which tyre(s) is (are) low pressure.*
- *The display may not show the tyre inflation pressure for about 10 minutes after the vehicle begins to move. This is because the TPMS system learns the tyre inflation pressure within this 10 minutes. The display will show the tyre inflation pressure after 10 minutes pass.*
- *If you stop the vehicle and change the ignition mode to LOCK (OFF), and leave it for 20 minutes or more, tyre pressure will be reset and will be indicated as 0 kPa when the engine is restarted. In this case, the current tyre pressure indication will recover after driving for a while. However, if any of tyre pressures has been detected as low pressure before stopping the engine, the tyre pressure indication may not recover and may be indicated as "---".*

To set the initial value of tyre pressure

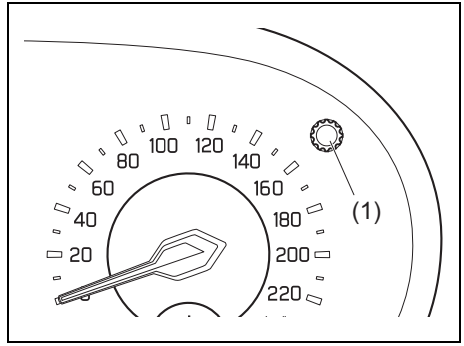

69T051510

1) When the ignition mode is ON and the vehicle is stationary, push and hold the indicator selector knob (1) on the instrument cluster for more than 3 seconds to change the information display to the setting mode.

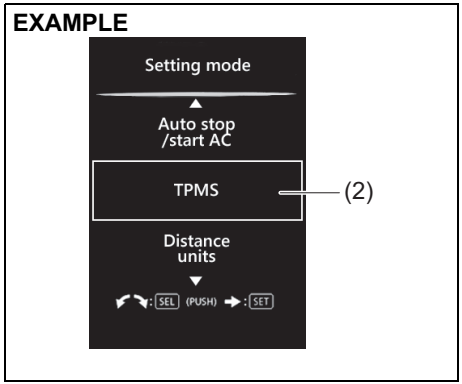

69T051100

(2) TPMS

2) Turn the indicator selector knob (1) left or right to select “TPMS” and push the indicator selector knob.

NOTE:
If you exit the setting mode, select “Back” and push the indicator selector knob (1).

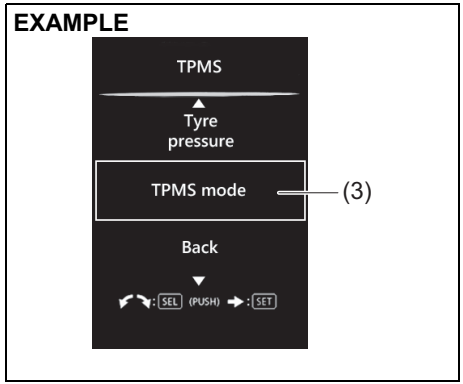

69T051120

(3) TPMS mode

3) Turn the indicator selector knob (1) left or right to select “TPMS mode” and push the indicator selector knob.

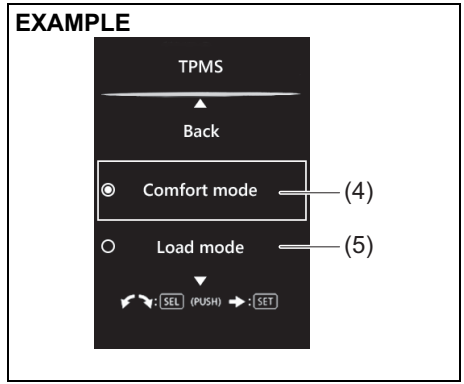

69T051130

(4) Comfort mode
(5) Load mode

4) Turn the indicator selector knob (1) left or right to select the initial value and push the indicator selector knob.
5) When the selected box is blinks, the setting is completed.

Replacing tyres and/or wheels

If you got a flat tyre and replaced it with the spare tyre, SUZUKI recommends that you have an authorized SUZUKI dealer or a qualified workshop mount a new tyre on the wheel that had the flat tyre. The TPMS is already set up to recognize the ID code of the original wheel, and normal TPMS operation will be restored.

If you need to replace any wheels on your vehicle, an authorized SUZUKI dealer or a qualified workshop must check that TPMS sensors are installed in the new wheels and must set up the TPMS to recognize the new sensors.

NOTE:
A TPMS sensor is not installed in the spare tyre. You should use the spare tyre only in an emergency situation, and should replace the spare tyre as soon as possible to restore normal TPMS operation.

⚠ WARNING

Use of tyres or wheels not recommended by SUZUKI can result in failure of the TPMS.
When replacing tyres and wheels, use only tyres and wheels recommended by SUZUKI as standard or optional equipment for your vehicle. Refer to "Tyres" (P.9-34) for additional information.

MEMO

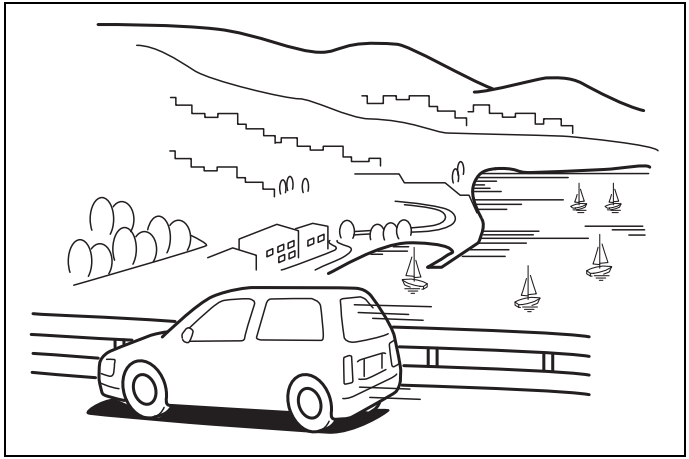

60G409

ADVICE FOR YOUR DRIVING

When driving 6-1
Off-road driving 6-8
Improving fuel economy 6-8
Snow chains 6-10
Stuck vehicle 6-10
Precaution for handling vehicle 6-11
Running-in 6-13
Catalytic converter 6-14

When driving

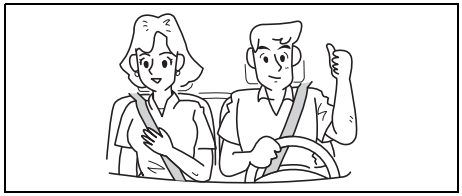

59RN02300

⚠ WARNING

- **Fasten your seat belts at all times. Even though airbags are equipped at the front seating positions, the driver and all passengers should be properly restrained at all times, using the seat belts provided. Refer to "Seat belt" (P.2-19) for instructions on proper use of the seat belts.**
- **Never drive under the influence of alcohol or other drugs. Alcohol and drugs can seriously impair your ability to drive safely, greatly increasing the risk of injury to yourself and others. You should also avoid driving when you are tired, sick, irritated or under stress.**

Start driving after carefully checking the surrounding circumstances

Be sure to always fully check the safety of the surrounding circumstances before beginning to drive.

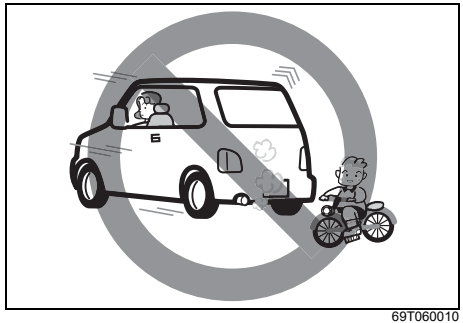

69T060010

⚠ CAUTION

You cannot check the safety of the surrounding circumstances enough only by the rear view camera, the rear parking sensors and the inside mirror. When moving the vehicle forward or backward, check the safety of the surrounding circumstances by directly checking with your eyes.

Do not race the engine, and avoid fast starts and rapid acceleration just after engine start

Refer to "Avoid fast starts, rapid acceleration and hard braking" (P.6-9) and "Do not race the engine" (P.6-9).

Do not concentrate on a mobile phone or navigation system

80T060040

⚠ WARNING

- **Do not operate a mobile phone, etc. while driving. Being distracted by phone operation could lead to an accident.**
- **Do not operate navigation/audio equipment, etc. while driving. Otherwise, there is the danger of an accident due to being distracted.**

Do not reach through the steering wheel

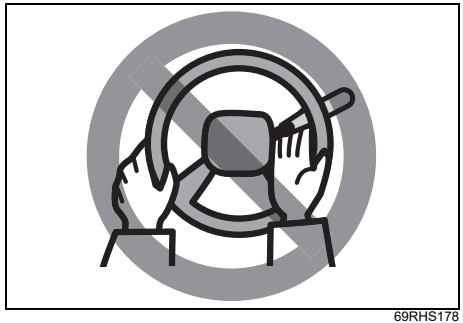

69RHS178

⚠ WARNING

Reaching through the steering wheel could interfere with steering wheel operation and result in an accident.

Do not drive with your foot on the brake pedal

⚠ CAUTION

Driving with your foot resting on the brake pedal could cause brake parts to become worn out more quickly than normal or cause brake components to overheat, making them less effective.

When depressing the accelerator pedal and the brake pedal simultaneously

NOTE:
If you depress both the accelerator pedal and the brake pedal simultaneously while driving, the engine power output may be suppressed.

Do not shift the gearshift lever into “N” (Neutral) while Driving

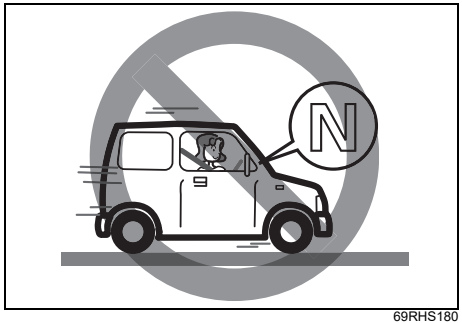

69RHS180

⚠ CAUTION

Do not put the gearshift lever into the “N” (Neutral) position while driving, except in times of emergency, as this disengages engine braking, which could result in an accident.

What should you do in case of malfunction or emergency?

- **Warning light turns on**
  Stop immediately in a safe place and take corrective action.
  For details, refer to “Warning lights and indicators” (P.1-9) or “Warning and indicator messages” (P.4-16).
- **You feel strong shock from under the floor**
  Immediately stop in a safe place and check whether there is brake fluid leakage or fuel leakage, and also check whether there is any abnormality in the exhaust pipe, etc. If any abnormality is found, consult an authorized SUZUKI dealer or a qualified workshop.
- **Sudden tyre puncture**
  Grasp the steering wheel firmly, carefully apply the brake, slowly reduce speed, and stop in a safe place.
- **You feel that the brake pedal is heavy to use**
  Via engine vacuum pressure, the vehicle utilizes a brake booster to reduce the force necessary for depressing the brake pedal. If this engine vacuum pressure decreases, you may feel as if the brakes require more force than usual to depress, but this is not abnormal. Depress the brake pedal as strongly as you need to.
- **Metallic screeching sound is heard from the brakes**
  Promptly consult an authorized SUZUKI dealer or a qualified workshop. The disk brake pads (SUZUKI genuine parts) are designed to emit a creaking/screeching sound as a function to warn the wear, as they have almost reached usage limit and replacement timing.

⚠ WARNING

The brakes could be losing their ability to function normally, which could result in an accident.
If you hear a metallic creaking/screeching sound, do not continue driving.

Use engine brake on a long downhill slope

Use engine braking(*) in tandem with regular braking when driving on a long downhill slope. Release the accelerator pedal and shift down according to vehicle speed.

For manual transmission vehicle

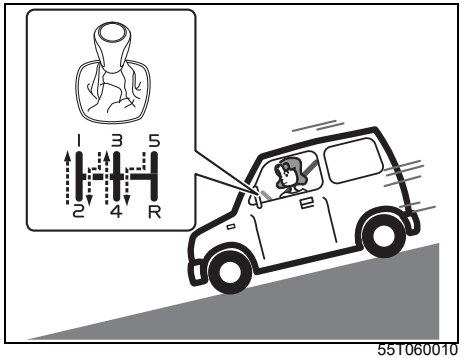

55T060010

For manual transmission vehicle, shift down to a lower gear one by one.

For CVT vehicle (with S-mode)

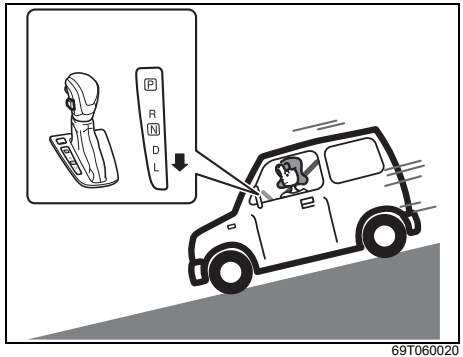

69T060020

For CVT vehicle (with S-mode), turn on the S mode switch or shift the gearshift lever to “L”.

For CVT vehicle (with manual mode)

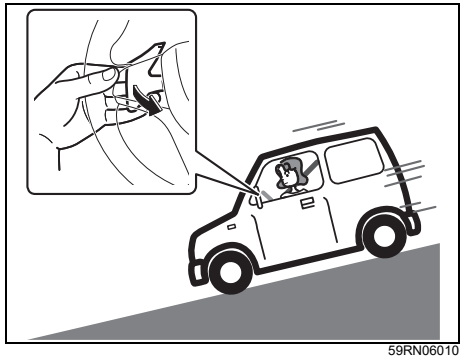

59RN06010

For CVT vehicle (with manual mode), pull “–” side shift paddle to shift down to the appropriate gear position after setting the gearshift lever to “M” (Manual mode).

*: Engine braking is a braking effect that occurs when you release your foot from the accelerator pedal while driving. The lower the gear, the greater the effect of engine braking becomes.

⚠ WARNING

Continuously depressing the brake pedal could cause the brakes to overheat, possibly rendering them ineffective.

When side wind Is strong

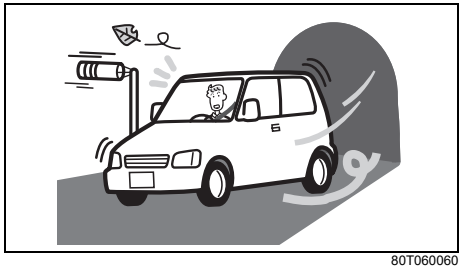

80T060060

At a tunnel exit, on a bridge, or when a large truck passes you, your vehicle might be blown slightly sideways by side wind. Do not panic. Firmly grasp the steering wheel, gradually reduce speed, and regain your intended course.

Drive slowly on a slippery road surface

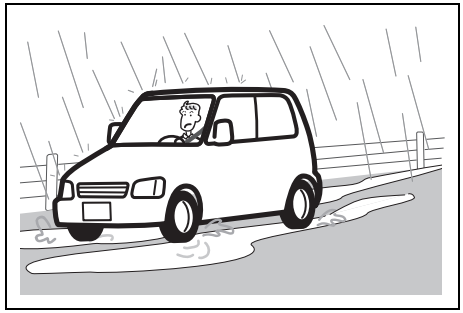

80T060070

⚠ CAUTION

When driving on wet, icy, or snowy roads, etc., refrain from sudden movements, such as sudden starting, acceleration, braking, turning or abrupt engine braking. Otherwise, there is the danger of an accident due to loss of traction.

Do not drive on puddles at high speed

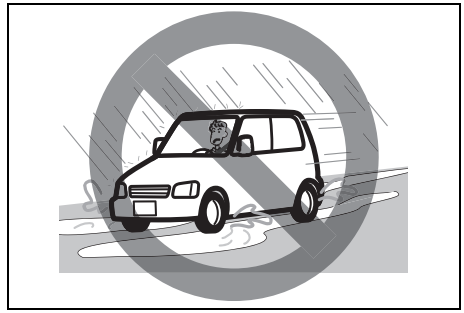

80T060080

⚠ CAUTION

When driving on puddles or on wet road surfaces at high speed, a thin surface of water is built between the wheels and the road surface, and the wheels may float. This is called as hydroplaning, which leads to a loss of control in the steering wheel and the brakes and possibly results in an accident.

Check brake effectiveness after driving on puddles or washing a vehicle

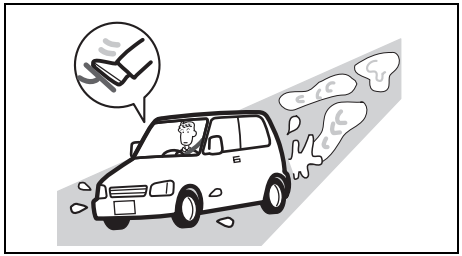

80T060090

- After verifying the safety of the surroundings, depress the brake pedal several times at low speed and check the brake effectiveness.
- If the brake effectiveness is still poor, depress the brake pedal at low speed gently and repeatedly until the brake effectiveness is fully recovered, to dry the brake equipment.

When encountering a flooded area

80T060100

Avoid driving in a flooded area or a deep puddle. If driving in a flooded area is unavoidable, go slowly in the lowest gear. In case that you have driven in a flooded area, stop the vehicle in a safe place while checking the brake effectiveness. Then, ask an authorized SUZUKI dealer or a qualified workshop to check the following inspection items.

- Function of brake
- Function of electrical components
- Changes of oil level and quality for engine, transmission and differential. In case that the oil is turbid whitely, water has been mixed in the oil and an oil change is required.
- Lubricant condition of the bearings, suspension joints, etc.

NOTICE

Avoid driving in a flooded area or a deep puddle. It may cause an engine stall, short in electrical components, engine and transmission damages, etc.

Highway driving

When driving at highway speeds, pay attention to the following:

- Stopping distance progressively increases with vehicle speed. Apply the brakes far enough ahead of the stopping point to allow for the extra stopping distance.
- On rainy days, hydroplaning can occur. Hydroplaning is the loss of direct contact between the road surface and the vehicle's tyres due to a water film forming between them. Steering or braking the vehicle during hydroplaning can be very difficult, and loss of control can occur. Keep speed down when the road surface is wet.
- At high speeds, the vehicle may be affected by side winds. Therefore, reduce speed and be prepared for unexpected buffeting, which can occur at the exits of tunnels, when passing by a cut of a hill, or when being overtaken by large vehicles, etc.

Driving on hills

For manual transmission vehicle

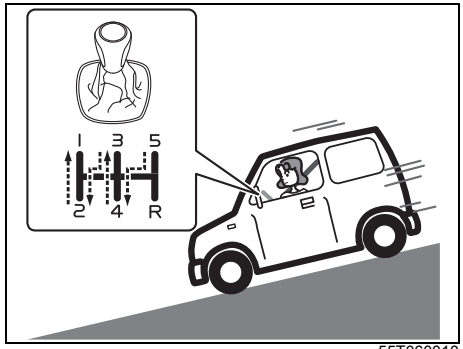

55T060010

For CVT vehicle (with S-mode)

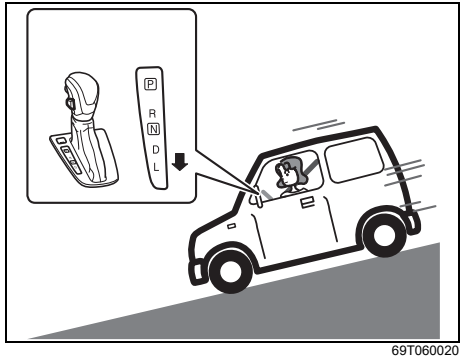

69T060020

For CVT vehicle (with manual mode)

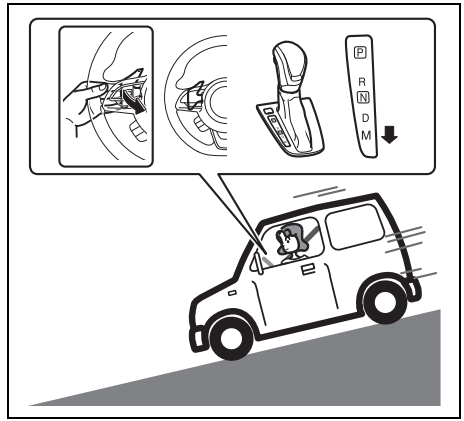

69T060030

- When driving on steep hills, the vehicle may begin to slow down and show a lack of power. If this happens, you should shift to a lower gear so that the engine will again be operating in its higher power range. Shift rapidly to prevent the vehicle from losing momentum.
- When driving down a hill, the engine should be used for braking by shifting to the next lower gear.

⚠ WARNING

Do not hold the brake pedal down too long or too often while going down a steep or long hill. This could cause the brakes to overheat, resulting in reduced braking efficiency. Failure to take this precaution could result in loss of vehicle control.

NOTICE

When descending a downhill, never press the engine switch to change the ignition mode to LOCK (OFF). Emission control system and CVT (CVT vehicle) damage may result.

Off-road driving

Do not drive in the field covered with grown grass

80T060110

If you drive in the field covered with grass, it may cause accident or vehicle damage by getting caught in grown grass.

⚠ WARNING

If loose grass, etc. becomes entangled in drive train parts or exhaust pipes, drive train components might become damaged or fire may result.

Improving fuel economy

The following instructions will help you improve fuel economy.

Keep tyre pressures correct

Under-inflation of the tyres can waste fuel due to increased running resistance of the tyres. Keep your tyres inflated to the correct pressure shown on the label on the driver's side door or the driver's door lock pillar.

Keep weight to a minimum

The heavier the load is, the more fuel the vehicle consumes. Unload any unnecessary luggage or cargo.

Avoid excessive idling

If you park your vehicle for more than one minute, stop the engine and start it again later. When warming up a cold engine, do not allow the engine to idle or apply full throttle until the engine has reached operating temperature. Allow the engine to warm up by driving.

Avoid fast starts, rapid acceleration and hard braking

Avoid fast starts
Fast starts away from lights or stop signs will consume fuel unnecessarily and shorten engine life. Start off slowly.

Avoid unnecessary stops
Avoid unnecessary deceleration and stopping. Try to maintain a moderate, steady speed whenever possible. Slowing down and then accelerating again uses more fuel.

Keep a steady cruising speed
Drive at a constant speed that road and traffic conditions will permit.

Do not race the engine

69RHS060

Revving the engine only consumes extra fuel and has no benefit.

NOTICE

Immediately after starting, the engine is often not yet fully warmed up. Therefore, revving the engine, starting to drive suddenly, or rapid acceleration can cause engine failure.

Drive with an appropriate gear for vehicle speed

Running the vehicle at a high engine rotation speed by using a low-speed gear will result in poor fuel economy. Use the correct gear according to the vehicle speed.

Keep the air cleaner clean

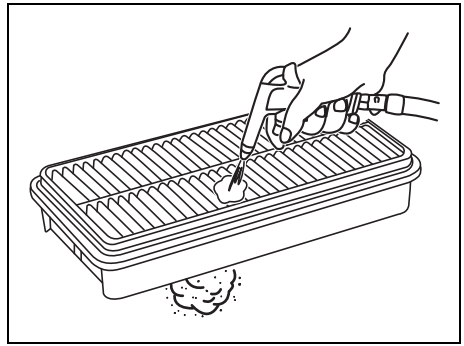

59RN06050

If the air cleaner is clogged with dust, there will be greater intake resistance, resulting in decreased power output and increased fuel consumption.

Snow chains

Snow chains should only be used if they are needed to increase traction or are required by law. Check that the chains you use are the correct size for your vehicle's tyres. Also check that there is enough clearance between the fenders and the chains as installed on the tyres.
Install the chains on the front tyres tightly, according to the chain manufacturer's instructions. Retighten the chains after driving about 1.0 km (1/2 mile) if necessary. With the chains installed, drive slowly.

NOTICE

If you hear the chains hitting against the vehicle body while driving, stop and tighten them.

Stuck vehicle

If your vehicle gets stuck in snow, mud or sand, follow the directions below:

1) Shift the transmission back and forth between a "D" (drive) (or first gear for manual transmission) and "R" (reverse) (or reverse gear for manual transmission). This will create a rocking motion which may give you enough momentum to free the vehicle. Press gently on the accelerator to keep wheel spinning to a minimum wheel rpm. Remove your foot from the accelerator while shifting. Do not race the engine. Excessive wheel spin will cause the tyres to dig deeper, making it more difficult to free the vehicle.

NOTE:
You may have to turn the ESP® system off in order to allow spinning the wheels.

2) If your vehicle remains stuck after a few minutes of rocking, we recommend you to consult an authorized SUZUKI dealer or a qualified workshop or a roadside assistance service. If a towing service is not available in an emergency, your vehicle may be temporarily towed by a towing cable or chain secured to the towing eye either on the front of the vehicle. Refer to "Towing by using towing eye" (P.10-3).

⚠ WARNING

Do not allow anyone to stand near the vehicle when you are rocking it, and do not spin the wheels faster than an indicated 40 km/h (25 mph) on the speedometer. Personal injury and/or vehicle damage may result from spinning the wheels too fast.

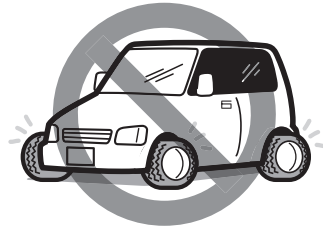

55T060070

- **In addition to following the driving tips in this section, it is important to observe the following precautions.**
  - **Check that your tyres are in good condition and always maintain the specified tyre pressure. Refer to "Tyres" (P.9-34) for details.**

(Continued)

⚠ WARNING

(Continued)

- **Do not use tyres other than those specified by SUZUKI. Never use different sizes or types of tyres on the front and rear wheels. For information regarding the specified tyres, refer to the tyre information label located on the driver's door lock pillar.**
- **Never use oversized tyres or special shock absorbers and springs to raise (jack up) your vehicle. This will change the handling characteristics. Oversized tyres may also rub against the fender over bumps, causing vehicle damage or tyre failure.**
- **After driving through water, test the brakes while driving at a slow speed to see if they have maintained their normal effectiveness. If the brakes are less effective than normal, dry them by repeatedly applying the brakes while driving slowly until the brakes have regained their normal effectiveness.**

NOTICE

Do not continue rocking the vehicle for more than a few minutes. Prolonged rocking can cause engine overheating or transmission damage.

Precaution for handling vehicle

Do not apply strong force to exterior parts

NOTICE

Do not apply strong force to the spoiler, front bumper, rear bumper, side skirts, etc. Doing so can cause damage to these exterior parts.

Be careful of uneven road surface

NOTICE

In the following cases, the bumper or the lower part of the vehicle could get damaged. Ensure proper care.

- **Entering the areas where there is uneven road surface, such as road shoulder**
- **Driving on roads with grooves, bumps or potholes**

Do not modify your vehicle illegally

69RHS184

⚠ WARNING

- **If you modify your vehicle illegally, there is a danger of a fire or an accident. Illegal modifications might adversely affect handling, performance or durability. Also, this could even violate laws and ordinances.**
  Do not install unsuitable parts to your vehicle or do not make your own adjustments or wiring.
  Such modifications also affect advanced safety equipment such as the SUZUKI SAFETY SUPPORT, and there is a danger that it may not operate properly or may operate in situations where it should not.

(Continued)

⚠ WARNING

(Continued)
- **Do not use wheels or wheel nuts other than specified SUZUKI genuine products. Doing so could lead to accidents, such as nuts loosening and the wheel coming off while driving. Also, fuel consumption and driving stability could worsen, or it could result in other malfunctions.**

NOTICE

- **When installing or removing electrical equipment such as radio equipment, navigation, audio equipment or electronic toll control equipment, consult with an authorized SUZUKI dealer or a qualified workshop. Also, do not operate electrical equipment directly from the battery terminals or connect ground wires directly. Otherwise, there is a danger of hindering the functioning of electronic components, causing fire, malfunction, battery runout, etc.**

(Continued)

NOTICE

(Continued)
- **Only a troubleshooting device designed for inspection and maintenance for this model can be connected to the vehicle's onboard diagnostics system. Connecting a device other than that specified could hinder the functioning of electronic components and cause battery runout, etc.**

Risk of installing electrical equipment other than SUZUKI genuine products

NOTICE

Installing electrical equipment other than SUZUKI genuine products may cause other electrical equipment to malfunction, lead to serious failure or leakage of personal information.
SUZUKI will not be responsible for any failure or damage caused by the installation of electrical equipment other than SUZUKI genuine products.

When installing, removing and repairing parts

⚠ WARNING

The SRS airbag system and the seat belt pretensioner system could activate unexpectedly or could be rendered ineffective if the parts that affect their functions are adjusted or arranged. In the following cases, these systems will be adversely affected. Consult with an authorized SUZUKI dealer or a qualified workshop beforehand.
- **When removing the steering wheel and conducting repairs around the steering wheel, etc.**
- **When conducting repairs around the center console, around the instrument cluster, under the front seats or to electrical wiring**
- **When installing audio equipment, etc.**
- **When conducting sheet metal painting or repairs around the dashboard**
- **When replacing the front seats or conducting repairs around the seats**
- **Repairs around the front pillar, the back pillar or the roof side**
- **When conducting repairs around the center pillar**

Be careful when placing accessories

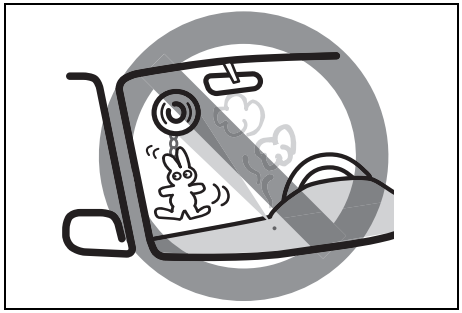

80T060120

⚠ WARNING

Do not attach accessories to the window glasses. Accessories and suction cups could hinder vision, or a suction cup could act as a lens and cause a fire. Also, if an airbag is activated, such accessories could be ejected outward within the vehicle, possibly resulting in injury.

When spilling drinks or liquids

⚠ WARNING

Do not allow liquids to spill, splash or spray inside the vehicle. The following items could malfunction, or fire could result. In the case of spilling drinks, etc., promptly consult an authorized SUZUKI dealer or a qualified workshop.

- **SRS airbag system**
- **Audio equipment**
- **Electrical parts such as switches and wiring**
- **Movable parts such as the gearshift lever or seat belt buckles**

NOTICE

The sensor of the seat belt reminder is built into the front passenger's seat cushion.
If you spill liquid such as soft drinks or juice, the sensor of the seat belt reminder may be damaged.
If you spill any liquid on the seat cushion, immediately wipe it with a soft cloth.

Running-in

NOTICE

The future performance and reliability of the engine depends on the care and restraint exercised during its early life. It is especially important to observe the following precautions during the first 960 km (600 miles) of vehicle operation.

- **After starting, do not race the engine. Warm it up gradually.**
- **Avoid prolonged vehicle operation at a constant speed. Moving parts will break in better if you vary your speed.**
- **Start off from a stop slowly. Avoid full throttle starts.**
- **Avoid hard braking, especially during the first 320 km (200 miles) of driving.**
- **Do not drive slowly with the transmission in a high gear.**
- **Drive the vehicle at moderate engine speeds.**
- **Do not tow a trailer during the first 960 km (600 miles) of vehicle operation.**

Catalytic converter

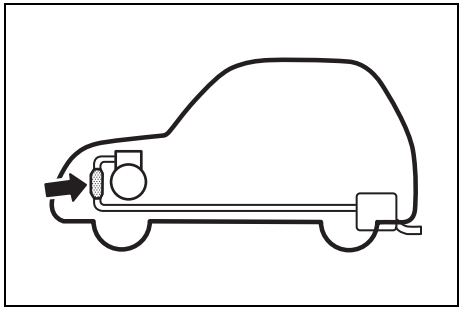

80G106

The purpose of the catalytic converter is to minimize the amount of harmful pollutants in your vehicle's exhaust. Use of leaded fuel in vehicles equipped with catalytic converters is prohibited, because lead deactivates the pollutant-reducing components of the catalyst system.

The converter is designed to last the life of the vehicle under normal usage and when unleaded fuel is used. No special maintenance is required on the converter. However, it is very important to keep the engine properly tuned. Engine misfiring, which can result from an improperly tuned engine, may cause overheating of the catalytic converter. This may result in permanent heat damage to the catalytic converter and other vehicle components.

NOTICE

To minimize the possibility of catalytic converter or other vehicle damage:

- **Maintain the engine in the proper operating condition.**
- **In the event of an engine malfunction, particularly one involving engine misfire or other apparent loss of performance, have the vehicle serviced promptly.**
- **Do not turn off the engine or interrupt the ignition when the transmission is in gear and the vehicle is in motion.**
- **Do not try to start the engine by pushing or towing the vehicle, or coasting down a hill.**
- **Do not idle the engine with any spark plug wires disconnected or removed, such as during diagnostic testing.**
- **Do not idle the vehicle for prolonged periods if idling seems rough or there are other malfunctions.**
- **Do not allow the fuel tank to get near the empty level.**

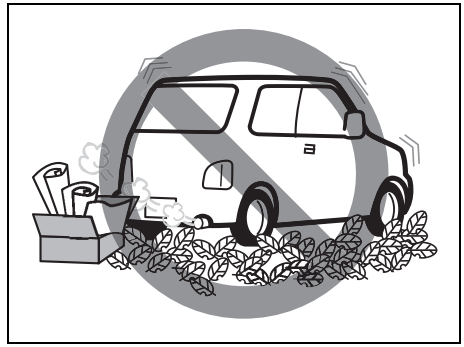

59RN06060

⚠ WARNING

Be careful where you park and drive; the catalytic converter and other exhaust components can get very hot. As with any vehicle, do not park or operate this vehicle in areas where combustible materials such as dry grass or leaves can come in contact with a hot exhaust system.

MEMO

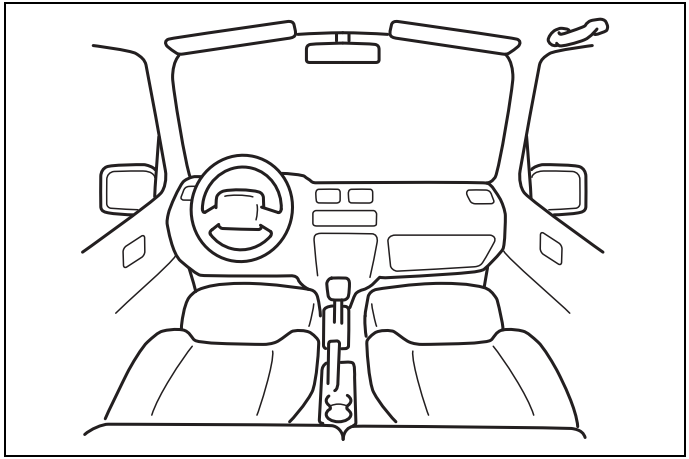

60G407

OTHER CONTROLS AND EQUIPMENT

Fuel filler opening 7-1
Refueling 7-2
Hood 7-4
Sun visor 7-6
Interior light 7-7
Accessory socket 7-9
Drink holder 7-10
Storage area 7-12
Assist grips 7-13
Footrest 7-13
Door pocket 7-14
USB socket 7-14
USB charging socket 7-14
Luggage compartment hook 7-15
Luggage compartment cover 7-15
Luggage compartment carpet 7-16
Heating and air conditioning system 7-17
Manual air conditioning system
(with digital control panel) 7-18
Automatic heating and air conditioning system
(climate control) 7-25
Radio antenna 7-32
Installation of radio frequency transmitters 7-32
Audio function 7-33
Remote audio controls 7-33

Fuel filler opening

Make sure to read “Refueling” in this section.

Fuel filler door

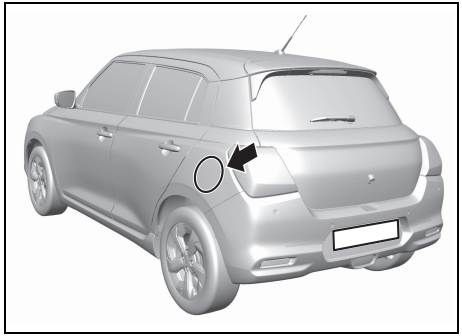

69T070430

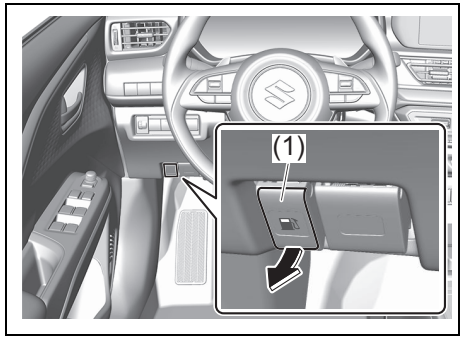

69T070010

A fuel filler door is located on the left rear side of the vehicle. The fuel filler door can be unlocked by pulling up the opener lever (1) located under the driver’s side instrument panel in the outboard position and locked by simply closing the door.

Fuel filler cap

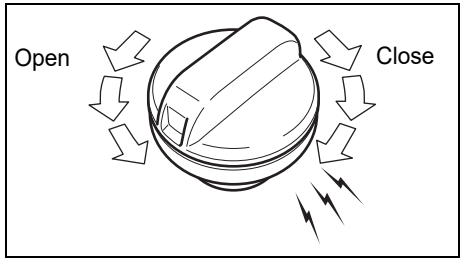

57L51093

To remove the fuel filler cap:

1) Stop the engine and close all the doors and windows while refueling.
2) Open the fuel filler door.
3) Remove the cap by turning it counterclockwise.

⚠ CAUTION

Remove the fuel filler cap slowly. The fuel may be under pressure and may spray out, causing injury.

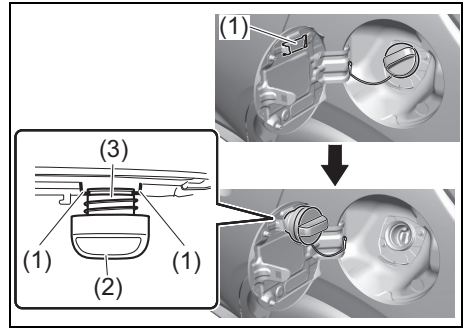

69T070020

NOTE:
The cap holder (1) holds the fuel filler cap (2) by hooking the groove (3) when refueling.

To reinstall the fuel filler cap:

1) Turn the cap clockwise until you hear several clicks.
2) Close the fuel filler door.

⚠ WARNING

- **If you open the fuel filler cap suddenly, fuel may be under pressure and may spray out. Loosen the fuel filler cap slowly. After air deflating sound stops, open the fuel filler cap.**
- **If fuel spills out, an accident such as a fire may occur. Also, if you leave spilled fuel as it is, it may cause paint staining, discoloration or cracking. Be careful not to spill out fuel. If you spill it out, wipe it off with a soft cloth.**
- **If the fuel filler cap is not closed securely, it may cause fuel leakage or a fire. After refueling, close the fuel filler cap until you hear more than 2 clicks.**
- **If you use the fuel cap other than a genuine SUZUKI cap, it may cause fuel leakage. Do not use the fuel cap other than a genuine SUZUKI cap.**

Refueling

Watch out for fire

⚠ WARNING

69RHS186

Be sure to observe the following points when refueling. Otherwise, gasoline may catch a fire from fuel and it may cause a fire.

- **Always stop the engine first.**
- **Close all the doors and windows when refueling.**
- **As gasoline is highly flammable, open sparks such as lit cigarettes are strictly prohibited.**

When refueling at a self-service gas station

⚠ WARNING

When refueling at a self-service gas station, be sure to observe the following points.

- **If substantial static electricity is accumulated within your body, a spark could ignite fuel vapors and possibly cause burns. Before opening the fuel filler cap, discharge any static electricity* that might have accumulated in your body, by touching a metal part of the vehicle body or the gas pump machine. In addition, do not re-enter the vehicle while refueling, as static electricity could be charged to your body again.**
- **Do not allow others who have not discharged their static electricity to come close to the fuel filler opening.**

***Take special care when air is dry, as this can cause your body to become charged with static electricity more easily. In addition, wearing layers of clothing can generate static electricity due to the friction of the fibers.**

(Continued)

⚠ WARNING

(Continued)

- **If you open the fuel filler cap suddenly, fuel may be under pressure and may spray out. Loosen the fuel filler cap slowly. After air deflating sound stops, open the fuel filler cap.**
- **If you do not insert the fuel filler nozzle securely into the fuel filler opening, fuel may spill out. Insert the fuel filler nozzle securely into the fuel filler opening until it stops.**
- **Pull the gas pump filler nozzle lever until it stops.**

(Continued)

⚠ WARNING

(Continued)

69RHS070

- **If you continue to refuel after the automatic stop to top up the tank, fuel could overflow. When the automatic stop function of gas pump filler nozzle is activated, stop refueling.**
  ***Depending on the type of gas pump machine being used, the automatic stop function could activate early and refueling might not be possible. Please follow the instructions of the employees at the gas station.**

(Continued)

⚠ WARNING

(Continued)

- **If fuel spills out, an accident such as a fire may occur. Also, if you leave spilled fuel as it is, it may cause paint staining, discoloration or cracking. Be careful not to spill out fuel. If you spill it out, wipe it off with a soft cloth.**
- **If the fuel filler cap is not closed securely, it may cause fuel leakage or a fire. After refueling, return the fuel filler nozzle to its original position and close the fuel filler cap until you hear more than 2 clicks.**
- **Fuel contains substances harmful to the human body. Do not breathe in vaporized fuel.**
- **In addition, be sure to observe all the warnings posted at the gas station.**

Hood

⚠ WARNING

- **As the hood is heavy, if a child tries to open or close it, the child may get injured. Do not allow a child to open or close the hood.**
- **As the engine compartment becomes hot, it may cause burns. When opening the hood, do not allow a child to come close to the hood.**
- **If you leave any tool or cloth in the engine compartment, it may cause a malfunction. Also, as the engine compartment becomes hot, it may result in vehicle fire. Do not leave any tool or cloth for inspection or cleaning in the engine compartment.**

⚠ CAUTION

If you come close to a running drive belt or a cooling fan (radiator fan), hands, hair, clothing, etc. may be caught and you may get injured. When the engine is running, keep away from the drive belt or the cooling fan (radiator fan).

Opening the hood

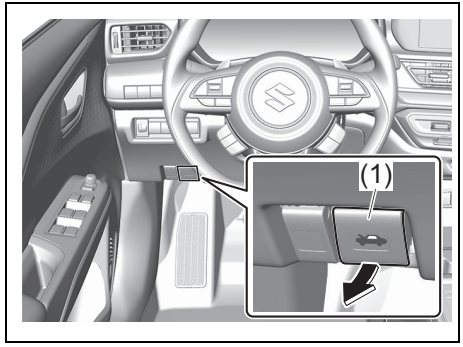

69T070040

1) Pull the hood release handle (1) located under the driver's side instrument panel in the outboard position. This will disengage the hood lock halfway.

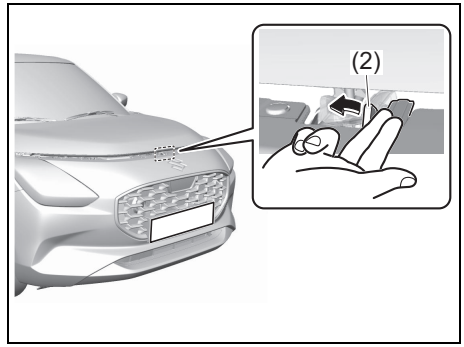

69T070030

2) Push the under-hood release lever (2) sideways with your finger, as shown in the illustration. While pushing the lever, lift up the hood.

⚠ CAUTION

The under-hood release lever can be hot enough to burn your finger while the engine is running or right after the engine stopped.
If you try to open the hood while the engine is running or right after the engine stopped, touch the under-hood release lever after it becomes cool enough.

NOTICE

If you lift up the hood with the wiper arms raised, the wiper arms and the hood may get damaged.
Do not lift up the hood with the wiper arms raised.

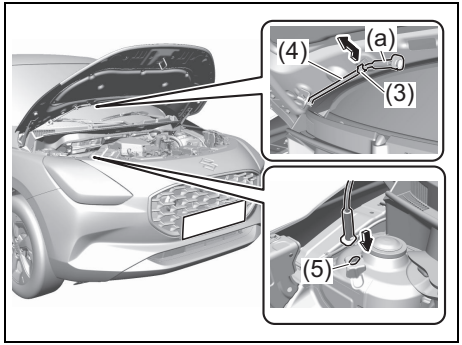

69T070050

3) While holding the hood, pull the prop rod (3) out from the holding clip (4), and then insert the end of the rod into the designated hole (5).

⚠ CAUTION

- **The prop rod can be hot enough to burn your finger while the engine is running or right after the engine stopped. If you would like to use the prop rod while the engine is running or right after the engine stopped, touch the prop rod after it becomes cool enough.**
- **If the prop rod slips out, you may get caught in the closing hood. Insert the end of the prop rod into the hole securely.**
- **The prop rod may slip out when the hood is blown by wind. If this occurs, you may get caught in the closing hood. Be very careful when you open the hood on a windy day.**

NOTE:
When removing the prop rod from the holder clip, hold the part (a) shown in the illustration.

Closing the hood

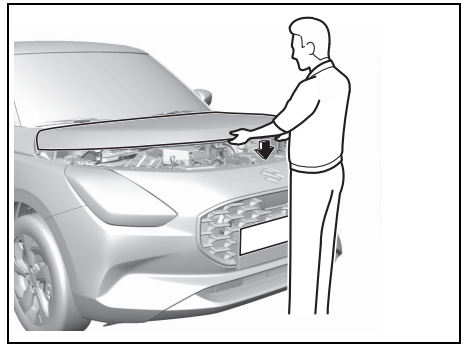

69T070060

1) Lift up the hood slightly and remove the prop rod from the hole. Put the prop rod back into the holding clip.

2) Lower the hood to about 20 cm (7.9 in.) above the hood latch, and then let it drop down. Check that the hood is securely latched after closing.

⚠ WARNING

If the hood is not fully closed, it can fly up unexpectedly during driving, obstructing your view and resulting in an accident. Check that the hood is fully closed and latched before driving.

⚠ CAUTION

When closing the hood, the occupant's body such as hands may get caught in the hood and get injured. Also, pushing on the hood from the top may damage it.
When closing the hood, check that no part of the occupant's body such as hands is in the path of the hood.

Sun visor

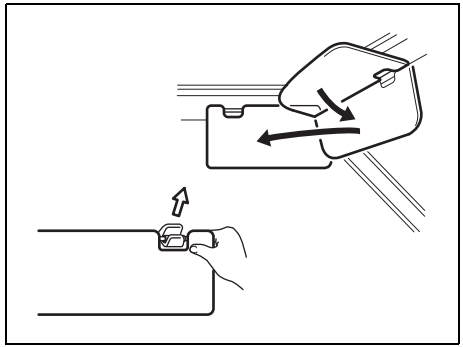

79J161

The sun visors can be pulled down to block glare coming through the windshield, or they can be unhooked and turned to the side to block glare coming through the side window.

Card holder (if equipped)

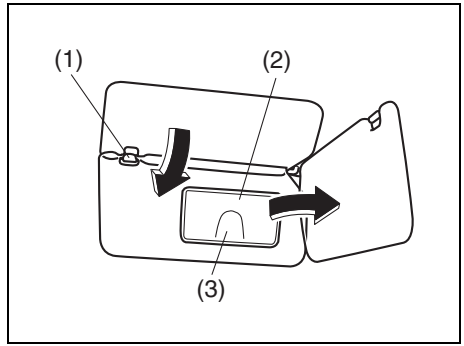

72M2058

(1) Hook
(2) Mirror cover
(3) Card holder

You can put a card in the card holder (3) on the back of the sun visor.

NOTICE

If you park your vehicle outdoors in direct sunlight in hot weather, the inside of the vehicle will become hot. The heat may distort or crack a card. When you park your vehicle outdoors in direct sunlight or in hot weather, do not leave plastic cards in the card holder.

Vanity mirror (if equipped)

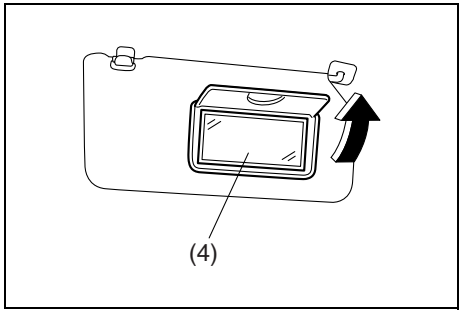

70K178

(4) Vanity mirror

To use the vanity mirror (4) on the back of the sun visor, pull up the mirror cover (2).

⚠ WARNING

- **If you use the vanity mirror while driving, you may lost control of the vehicle, resulting in an accident. Do not use the vanity mirror while driving.**
- **If the front airbag is accidentally inflated when you come close to the front airbag location, it could hit you hard and you may get severely injured. When using the vanity mirror, do not come close to the front airbag location or lean against it.**

Interior light

Front

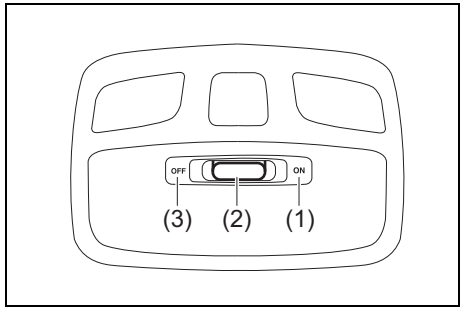

69T070070

(1) ON position
(2) DOOR position
(3) OFF position

NOTICE

If you turn on the interior light for a long time with the engine stopped, the lead-acid battery may discharge. Do not turn on the interior light for a long time with the engine stopped.

NOTE:

- *The light will automatically be turned off to prevent the lead-acid battery from discharging, when the following conditions are simultaneously met:*
  - *The engine switch is in LOCK (OFF) mode.*
  - *The interior light switch is in DOOR position (2).*
  - *15 minutes passed after the interior light was turned on.*
- *The light will automatically be turned on or blink, when one of the following operations is performed with the interior light switch in DOOR position (2):*
  - *Closing or opening the doors by the keyless entry system*
  - *Closing or opening the doors by the request switch*

Switch position	Status
ON	The light comes on and stays on regardless of whether the door is opened or closed.
DOOR	The light comes on while any of the doors (including the tailgate) is opened. • For about 15 seconds after all doors are closed, the light will remain on and then fade out. • If all doors are closed, the light comes on for about 15 seconds when the engine switch is pressed to change the ignition mode from ON to LOCK (OFF). After about 15 seconds, the light will fade out. The light will fade out when one of the following operations is performed even while the light is turned on. • Pressing the engine switch to change the ignition mode to ACC or ON • Locking all doors using the key • Locking all doors by operating the remote controller or the request switch
OFF	The light remains off even when the door is opened.

Luggage compartment light

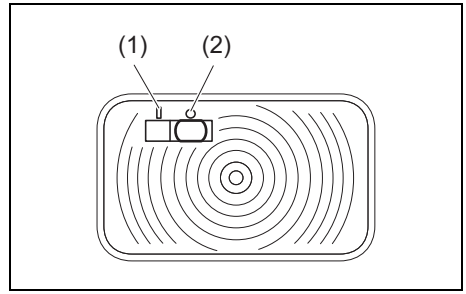

69T070080

When you open the tailgate with the luggage compartment light switch in the “ON” position (1), the light comes on for about 15 minutes.
When the luggage compartment light switch is in the “OFF” position (2), the light remains off regardless of whether the tailgate is open or close.

Accessory socket

Center console

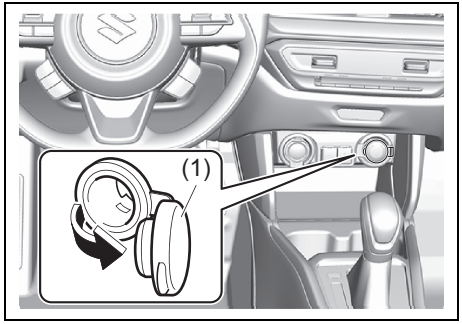

69T070090

- Each accessory socket in the above figure is a typical example; the actual equipment depends on the vehicle type.

The accessory socket will work when the engine switch is in ACC or ON mode.
This socket can be used to provide 12 volt/120 watt/10 ampere power for electrical accessories.
When using the accessory socket, open the rubber cap (1).

⚠ WARNING

When the accessory socket is not in use, closed the rubber cap. If any foreign material enters the accessory socket, it may cause a malfunction or short circuit.

NOTICE

- **To prevent the fuse from being blown, when using sockets at the same time, do not exceed the total combined power capacity of 12 volt/120 watt/10 ampere.**
- **If you use the accessory socket while the engine is stopped, the lead-acid battery may discharge. Also, if you use the accessory socket for a long time while the engine is in the idling condition, the lead-acid battery may discharge.**

(Continued)

NOTICE

(Continued)

- **Check that the cap remains on the socket when the socket is not in use.**
- **Use of inappropriate electrical accessories can cause damage to your vehicle's electrical system. Check that any electrical accessories you use are designed to plug into this type of socket.**
- **When the engine switch is in LOCK (OFF) mode, the audio or navigation system may not turn off or the keyless entry system may not work. These situations may occur because of the electrical equipment which is connected to the accessory socket. In this case, disconnect the electrical equipment from the accessory socket and check whether the situations are improved. If the problem persists, ask an authorized SUZUKI dealer or a qualified workshop for inspection.**

Drink holder

Floor console

Front

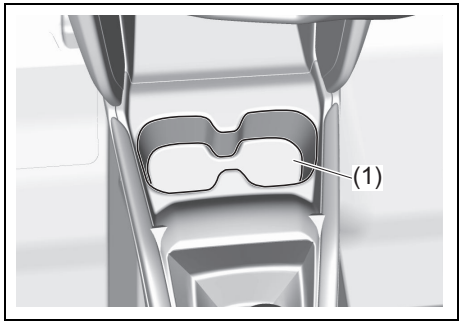

69T070100

Rear

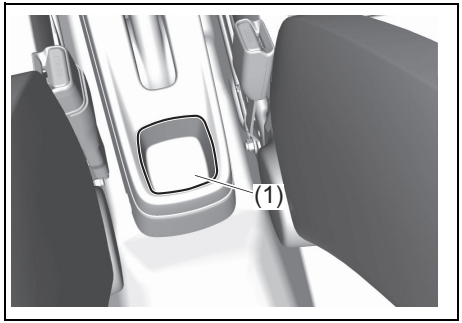

69T070130

(1) Floor console drink holder

Door

Front

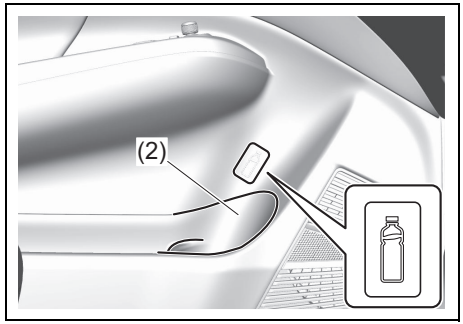

69T070110

Rear

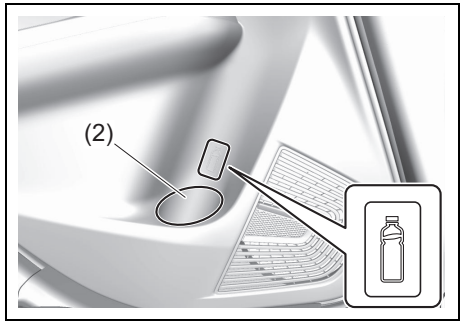

69T070120

(2) Bottle holder

⚠ WARNING

- **Be careful and use a lid for a drink not to spill out liquid. Spilling out hot liquid can cause burn injury. In addition, if liquid spills out on the following parts, it may cause a fire or a malfunction and an airbag system may not work properly.**
  - **Navigation system, audio system or the relevant switches**
  - **Wiring or electrical components under the floor**
  - **Moving part of the gearshift lever or the seatbelt buckle**
- **The lithium-ion battery is located under the front passenger's seat. Spilling liquids on the lithium-ion battery in model equipped with idling stop system may cause a fire or electric shock or damage to the battery.**
- **If you place a long drink container, sharp-edged, hard or breakable objects in the drink holders, these objects may be thrown out, resulting in personal injury and hindering your view. In the driver's side drink holder or the front passenger's side drink holder, you can place a can, a cup or a plastic bottle.**

(Continued)

⚠ WARNING

(Continued)

- **In the floor console drink holder, do not place a carton pack with the bigger size than 500 ml. Otherwise, the carton pack may fall down or a drink may spill out.**

NOTE:

- *If you place the keyless remote controller in a drink holder or a bottle holder, it may not be detected.*
- *If you spill, or drop liquid accidentally, have your vehicle inspected by an authorized SUZUKI dealer or a qualified workshop.*

Storage area

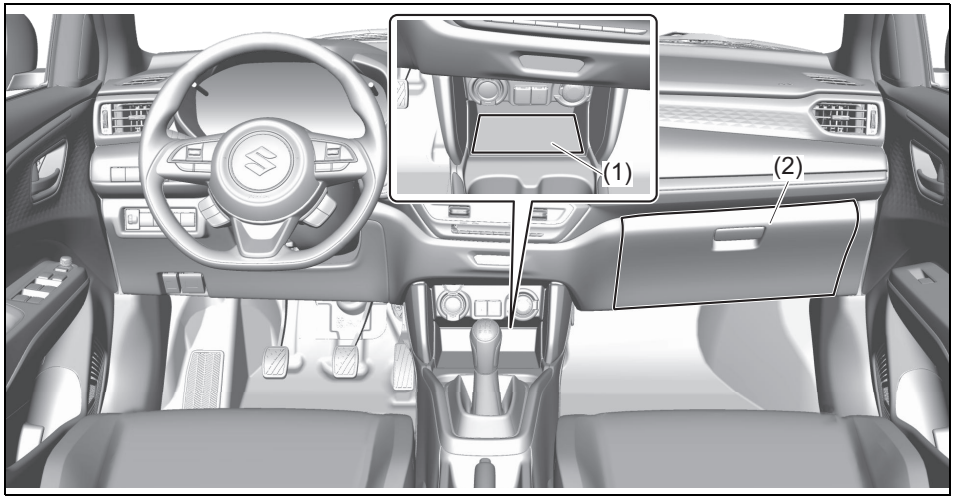

69T070140

(1) Floor console tray
(2) Glove box

- Each item in the figure is a typical example; the actual equipment depends on the vehicle type.

⚠ WARNING

- **If any object gets caught in the brake pedal or the accelerator pedal, you may not operate the pedal properly, resulting in an accident. If you use a storage area without a lid, do not place the object which may fall out while driving.**
- **If there is any object within the area where the front passenger's airbag could inflate, the object may be thrown out or the front passenger's airbag may not inflate properly.**

⚠ CAUTION

If you use a storage area with a lid, do not drive the vehicle with the lid open. In acceleration, a sudden braking or an collision, your body may be hit by the lid or the object which falls out from the storage area.

NOTE:
If you place the keyless remote controller in any of storage areas, it may not be detected.

Using Storage Area with a Lid

Glove box

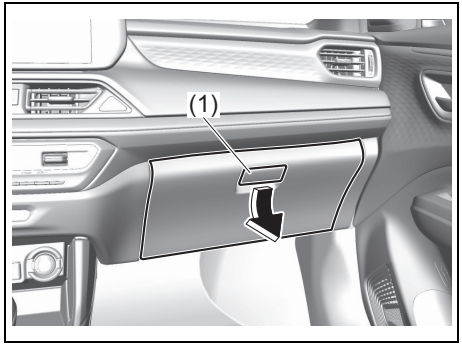

69T070150

- To open the glove box, pull the latch lever (1).
- To close it, push the lid until it is latched securely.

⚠ WARNING

- **Never drive with the glove box lid open. It could cause injury if an accident occurs.**
- **Do not leave cigarette lighters or spray cans in the glove box. If a cigarette lighter or spray can is in a place such as the glove box, it may light accidentally when luggage is loaded, causing a fire.**

Assist grips

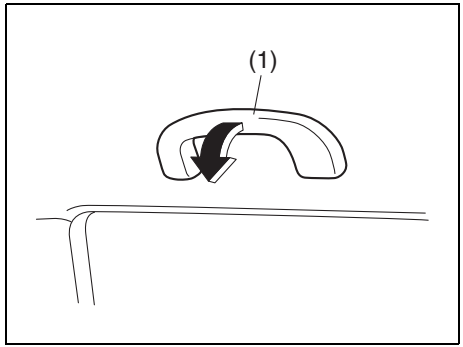

80J1233

Assist grips are provided for convenience. Pull the assist grip (1) towards you.

NOTICE

To avoid damaging the assist grip and the molded headlining, do not hang down the assist grip.

Footrest

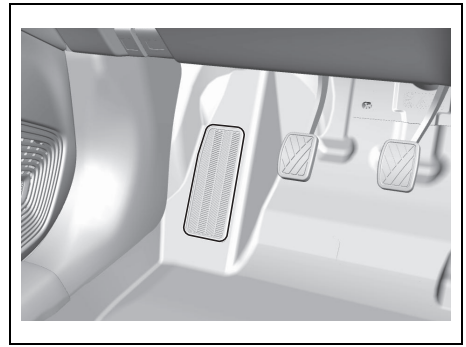

69T070160

Use the footrest as a support for your left foot.

Door pocket

Front

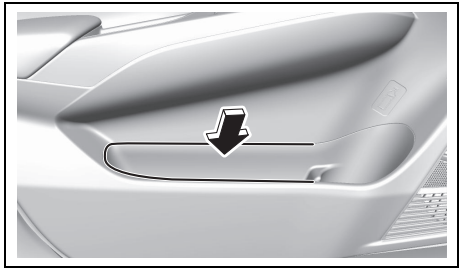

69T070210

Each pocket is provided for holding light and soft things such as gloves, newspapers or magazines.

⚠ CAUTION

- **If an accident occurs, objects such as bottles, cans, etc. in the door pocket can injure the occupants. Do not put hard or breakable objects in the door pocket.**
- **If you grab and pull the door pocket, it may be broken, resulting in personal injury. When closing a door, do not grab and pull the door pocket.**

NOTE:
If you place the keyless remote controller in a door pocket, it may not be detected.

USB socket

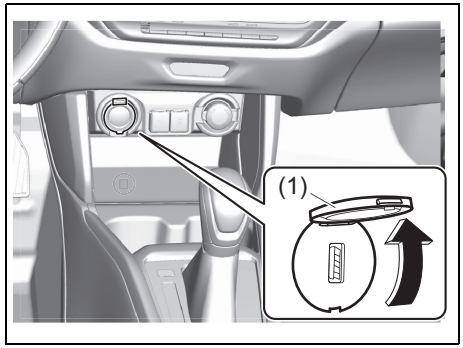

69T070220

Open the cover (1), and then connect your portable digital music player, etc. to this socket to enjoy music through the vehicle's audio system. Refer to the supplementary manual for details.

⚠ WARNING

If foreign material enters the USB socket, a malfunction or a short circuit may occur.
Always close the cover when the USB socket is not in use.

USB charging socket

When the ignition mode is ACC or ON, you can charge your mobile device such as your smart phone by using the connecting cable (commercial item).

Left side socket (1)
The standard capacity is 5 V / 2.4 A (12 W) for one socket and USB Type-A can be used.

Right side socket (2)
The standard capacity is 5 V / 3.0 A (15 W) for one socket and USB Type-C can be used.

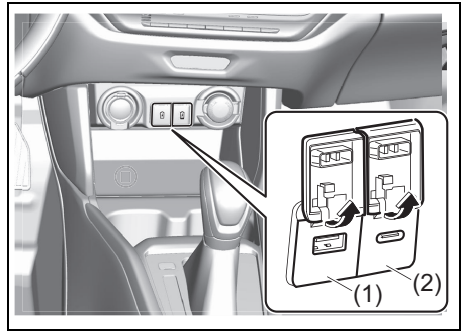

69T070230

Open the cover to use the USB charging socket.

⚠ WARNING

When the USB charging socket is not in use, close the cover. If any foreign material enters the USB charging socket, it may cause a malfunction or short circuit.

NOTICE

Do not charge your mobile device for a long period of time, while the engine is stopped. Otherwise, the lead-acid battery may run out.

NOTE:
- *The USB charging socket should be used only for charging.*
- *For some model, charging may pause. However, this is not a malfunction.*
- *Depending on the vehicle conditions such as the following examples, charging may temporarily pause.*
  - *When the inside temperature of the vehicle is high after parking the vehicle under the blazing sun*
  - *When the engine is started*

Luggage compartment hook

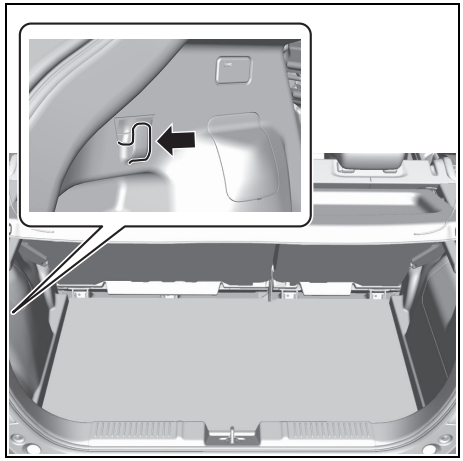

69T070170

You can hang the shopping bag or other suitable objects on the hook.
This hook is not designed for large or heavy items.

NOTICE

To avoid breaking the hook, do not hang items heavier than the following weight.
Shopping hook: 2 kg (4.4 lbs)

Luggage compartment cover

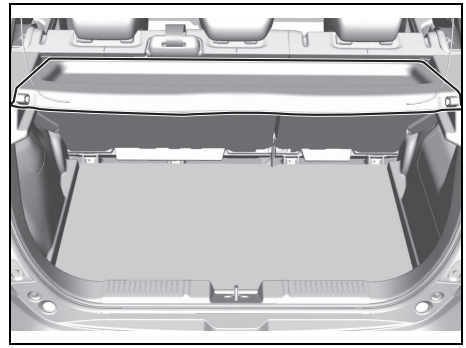

69T070180

Luggage or other cargo placed in the luggage compartment is hidden from view by a luggage compartment cover.

⚠ WARNING

Do not carry items on top of the luggage compartment cover, even if they are small and light. Objects on top of the cover could be thrown about in an accident, causing injury, or could obstruct the driver's rear view.

Luggage compartment carpet

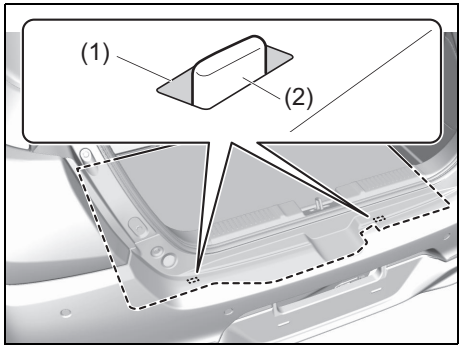

69T070190

There is a tool box under the luggage compartment carpet. For model with flat tyre repair kit, when installing the luggage compartment carpet, hook the carpet by using the holes (1) in the carpet, onto the hooks (2) at the base of the luggage compartment.

Heating and air conditioning system

Air outlet

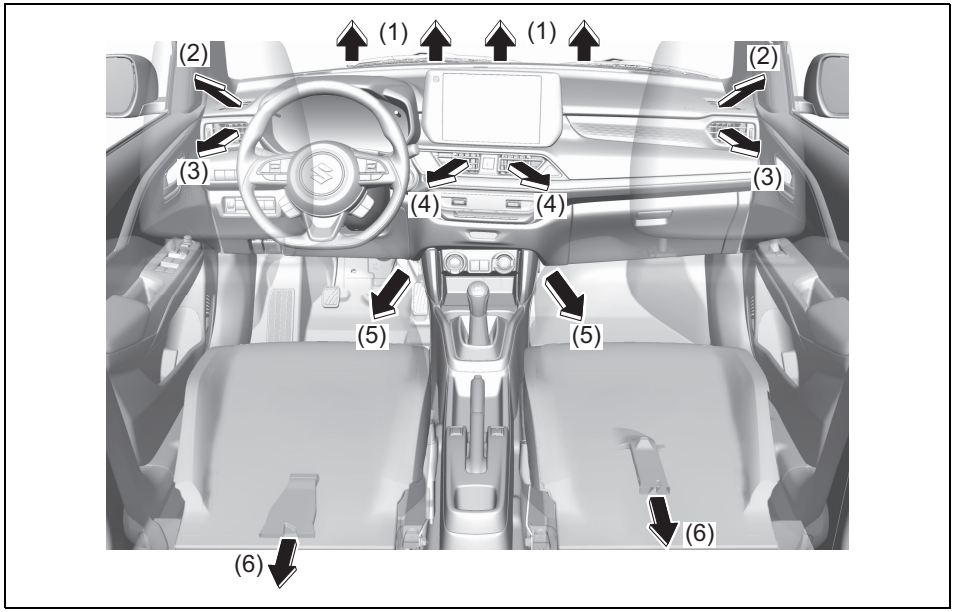

52RM50220

(1) Windshield defroster outlet
(2) Side defroster outlet
(3) Side outlet
(4) Center outlet
(5) Floor outlet
(6) Rear floor outlet

Center outlet

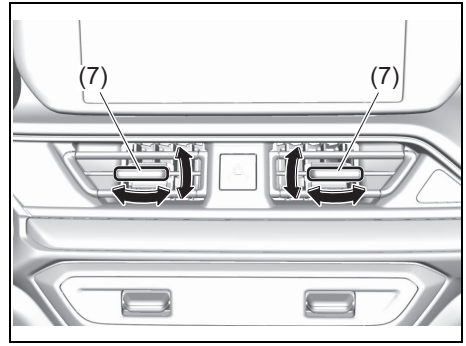

69T070240

Move the knob (7) vertically or horizontally to adjust the direction of airflow as desired.

⚠ CAUTION

Prolonged exposure to hot air from the heater or air conditioner could result in low temperature burns. All vehicle occupants, particularly children, the elderly, those with special needs, individuals with delicate skin, and sleeping individuals, should maintain sufficient distance from the air outlets to prevent prolonged exposure to hot airflow.

Side outlet

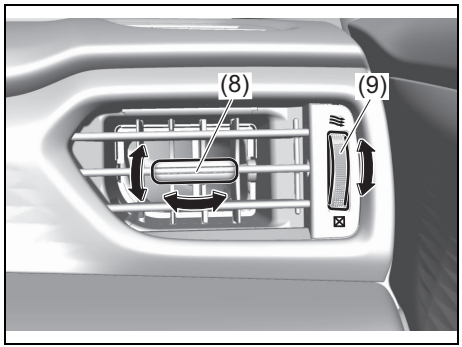

69T070250

When open, air comes out regardless of the air flow selector position. Move the knob (8) vertically or horizontally, to adjust the direction of airflow as desired. The side outlet opens when you turn the dial (9) upward and closes when you turn it downward.

⚠ CAUTION

Prolonged exposure to hot air from the heater or air conditioner could result in low temperature burns. All vehicle occupants, particularly children, the elderly, those with special needs, individuals with delicate skin, and sleeping individuals, should maintain sufficient distance from the air outlets to prevent prolonged exposure to hot airflow.

Manual air conditioning system (with digital control panel)

Description of controls

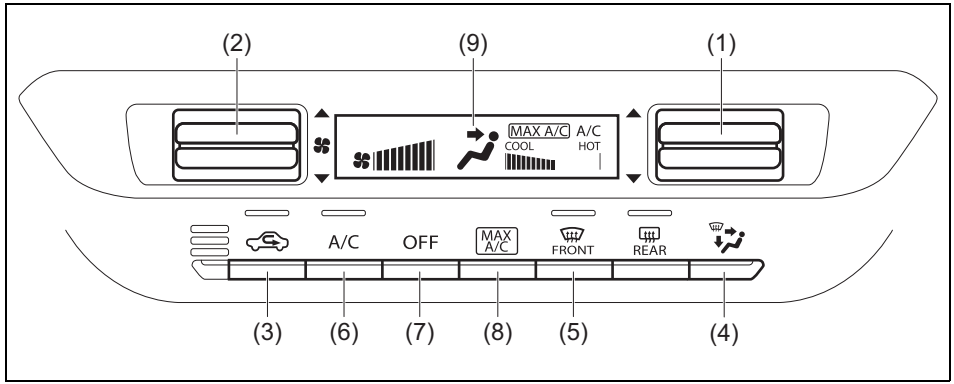

69T070260

(1) Temperature selector
(2) Blower speed selector
(3) Air intake selector
(4) Air flow selector
(5) Defrost switch
(6) Air conditioning switch
(7) “OFF” switch
(8) Maximum cooling switch
(9) Display

Temperature selector (1)

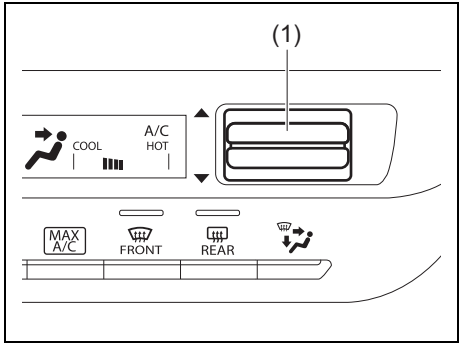

69T070270

Push upper part or lower part of the temperature selector (1) to adjust the temperature.
To down a temperature, push upper part of the temperature selector. To up a temperature, push lower part of the temperature selector.

Blower speed selector (2)

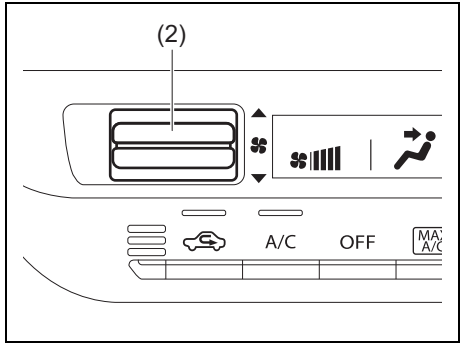

69T070280

The blower speed selector (2) is used to turn on the blower and to select blower speed.
To down the blower speed, push upper part of the blower speed selector. To up the blower speed, push lower part of the blower speed selector.

Air intake selector (3)

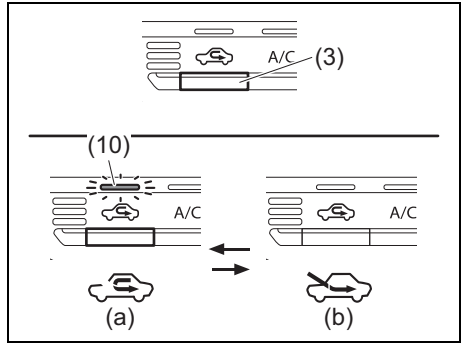

55T070160

Push the air intake selector (3) to change between the following modes.

RECIRCULATED AIR (a)
When this mode is selected, inside air is recirculated. At the same time, the indicator light (10) will turn on. This mode is suitable when driving through an area with polluted air such as a tunnel, or when attempting to quickly cool down the vehicle.

FRESH AIR (b)
When this mode is selected, outside air is introduced. At the same time, the indicator light (10) will turn off.

The fresh air position (b) and recirculated air position (a) are selected alternately each time the air intake selector is pushed.

NOTE:
If you select the recirculated air position (a) for an extended period of time, the air in the vehicle can become contaminated. Therefore, you should occasionally select the fresh air position (b).

Air flow selector (4)

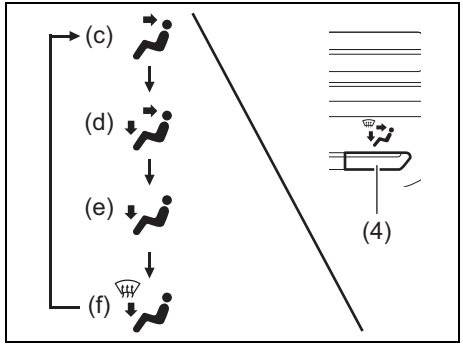

55T070170

Push the air flow selector (4) to change among the following functions. The indication of the selected mode appears on the display.

VENTILATION (c)

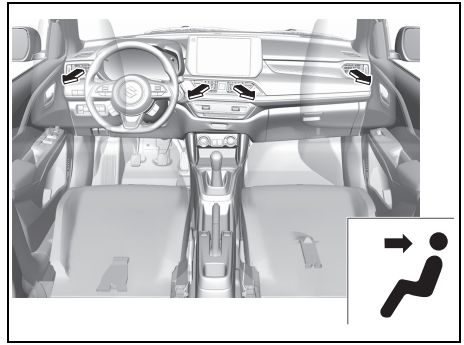

69T070290

Temperature-controlled air comes out of the center and side outlets.

BI-LEVEL (d)

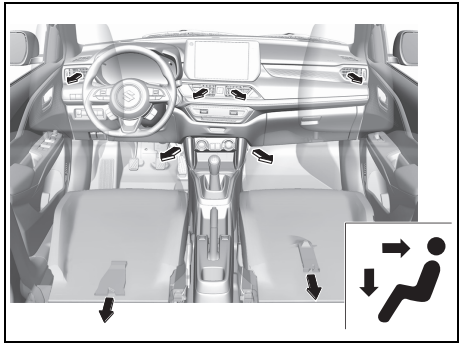

69T070300

Temperature-controlled air comes out of the floor outlets and cooler air comes out of the center and side outlets. When the temperature selector (1) is in the fully cold position or fully hot position, however, the air from the floor outlets and the air from the center and side outlets will be the same temperature.

HEAT (e)

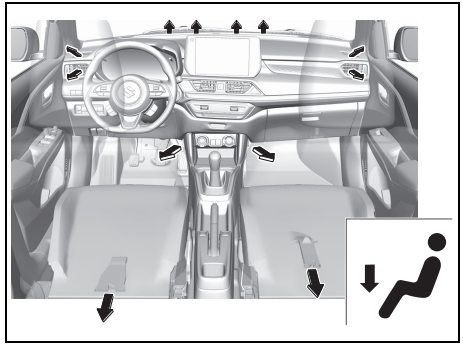

69T070310

Temperature-controlled air comes out of the floor outlets and the side outlets, a small amount of air comes out of the windshield defroster outlets and also comes slightly out of the side defroster outlets.

HEAT & DEFROST (f)

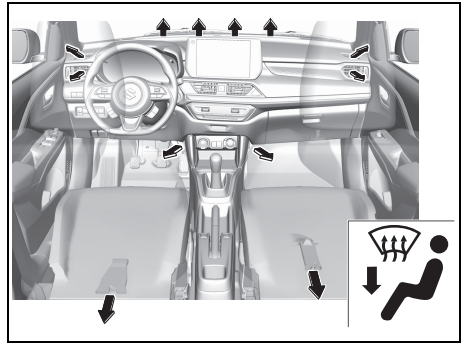

69T070320

Temperature-controlled air comes out of the floor outlets, the windshield defroster outlets, the side defroster outlets and the side outlets.

Defrost switch (5)

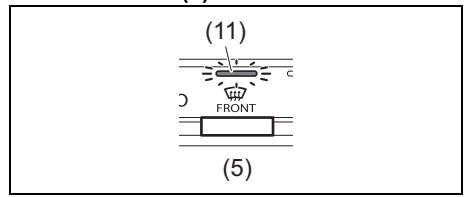

59RN07170

Push the defrost switch (5) to turn on the defroster. At the same time, the indicator light (11) will turn on.

DEFROST

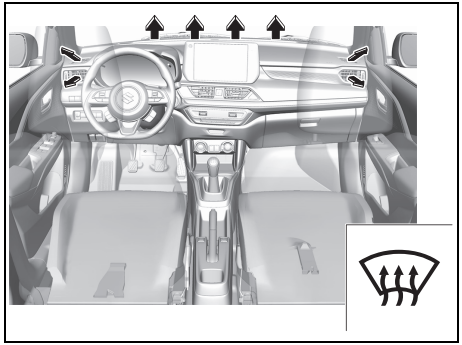

69T070330

Temperature-controlled air comes out of the windshield defroster outlets, the side defroster outlets and the side outlets.

NOTE:
When the defrost switch (5) is pushed to turn on the defroster, the air conditioning system will operate and FRESH AIR mode will be selected automatically. In very cold weather, however, the air conditioning system will not operate.

Air conditioning switch (6)

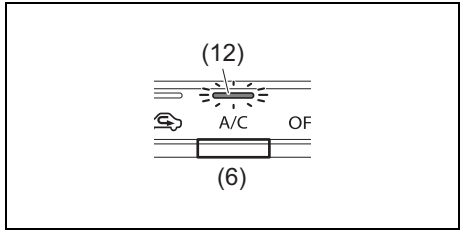

59RN07190

The air conditioning switch (6) is used to turn on and off the air conditioning system only when the blower is on. To turn on the air conditioning system, push in the switch and “A/C” will appear in the display. To turn off the air conditioning system, push in the switch again and “A/C” will go off.

Maximum cooling switch (8)

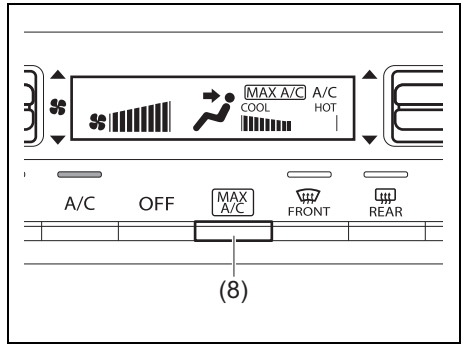

69T070350

Push the maximum cooling switch (8) to cool down the interior at peak efficiency.

NOTE:
When the maximum cooling switch is pushed, “MAX A/C” will appear in the display and the air conditioning system will operate in the following settings automatically.

- *The air conditioner: On*
- *The blower speed: Full speed*
- *The temperature setting level: Maximum cooling*
- *The air flow mode: VENTILATION (c)*
- *The air intake mode: RECIRCULATED AIR (a)*

To return to the current setting, push the maximum cooling switch again.

System operating instructions

To set the air conditioning system, follow the procedure below.

1) Start the engine.
2) Set the desired blower speed by pushing upper part or lower part of the blower speed selector (2).
3) Set the desired temperature by pushing upper part or lower part of the temperature selector (1).

You can use the air conditioning switch (6) to manually turn the air conditioner on or off according to your preference. When you turn the air conditioning switch off, the air conditioning system cannot lower the inside temperature below the outside temperature.

To turn the air conditioning system off, push the “OFF” switch (7).

Normal cooling

Set the air flow selector (4) to VENTILATION (c), the temperature selector (1) to the desired temperature position and the blower speed selector (2) to the desired blower speed position. Setting the blower speed selector (2) to a higher blower speed position increases cooling efficiency.

You can switch the air intake selector (3) to either FRESH AIR (b) or RECIRCULATED AIR (a) as you desire. Choosing RECIRCULATED AIR (a) increases cooling efficiency.

Quick cooling (using recirculated air)

The base settings are the same as for normal cooling except you select RECIRCULATED AIR (a) and the highest blower speed.

To cool down the interior at peak efficiency, push the maximum cooling switch (8).

NOTE:

- *If you select RECIRCULATED AIR (a) for an extended period of time, the air in the vehicle can become contaminated and the windows tend to get misted. Therefore, you should select FRESH AIR (b) whenever possible.*
- *If your vehicle has been left in the sun with the windows closed, it will cool faster if you open the windows briefly while you operate the air conditioner with the air intake selector at FRESH AIR (b) and the blower at high speed.*

Dehumidifying

Set the air flow selector (4) to the desired air flow selector position, the temperature selector (1) to the desired temperature position and the blower speed selector (2) to the desired blower speed position. Also select FRESH AIR (b).

NOTE:

- *Because the air conditioner dehumidifies the air, turning it on will help keep the windows clear.*
- *If the heating performance can no longer perform at a sufficient level due to automatically stopping the engine, press the ENG A-STOP OFF switch to deactivate the ENG A-STOP system. (The engine will automatically restart and the air conditioning performance will be restored.)*
- *If the windshield and/or the driver’s side/passenger side door windows are fogged during automatically stopping the engine, stop the ENG A-STOP system and restart the engine. Then, push the air flow selector (4) to change the air flow to the HEAT & DEFROST or DEFROST position to defog the windows.*

Maintenance

If you do not use the air conditioner for a long period, such as during winter, it may not give the best performance when you start using it again. To help maintain optimum performance and durability of your air conditioner, it needs to be run periodically. Operate the air conditioner at least once a month for one minute with the engine idling. This circulates the refrigerant and oil and helps protect the internal components.

If your air conditioner is equipped with air filters, clean or replace them as specified in “Maintenance schedule” in the “INSPECTION AND MAINTENANCE” section. Have this job done by an authorized SUZUKI dealer or a qualified workshop as the lower glove box must be lowered for this job.

NOTE:

- *Your vehicle uses the air conditioning refrigerant HFO-1234yf, commonly called R-1234yf. R-1234yf replaced R-134a for automotive applications. Other refrigerants are available, but only R-1234yf should be used in your vehicle.*

(For the country of Singapore)

- *For repair and parts replacement, have your vehicle repaired or replaced parts by an authorized SUZUKI dealer or a qualified workshop that has the mechanic qualified with SAE J2845 for air conditioner of R-1234yf.*

NOTICE

Using the wrong refrigerant may damage your air conditioning system. Use R-1234yf only. Do not mix or replace the R-1234yf with other refrigerants.

How to use air conditioning system effectively

If you do not use the air conditioner for a long period

Ensure that the air conditioner is used at least once a month, so as to circulate the refrigerant throughout the air conditioning system. The refrigerant contains the oil necessary for lubricating the system’s parts, which contributes to maintaining the air conditioner’s performance.

Parking under the blazing sun

After parking for a long time under the blazing sun, the interior temperature can become very high. Use the air conditioning system, with the windows or doors opened to ventilate the interior.

Automatic heating and air conditioning system (climate control)

Description of controls

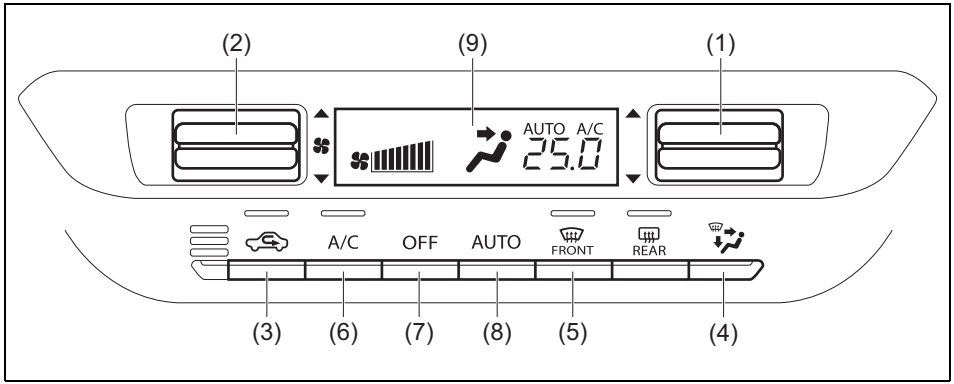

52RM50340

(1) Temperature selector
(2) Blower speed selector
(3) Air intake selector
(4) Air flow selector
(5) Defrost switch
(6) Air conditioning switch
(7) “OFF” switch
(8) “AUTO” switch
(9) Display

Temperature selector (1)

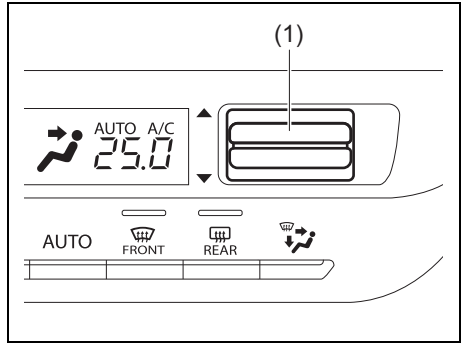

69T070370

Push upper part or lower part of the temperature selector (1) to adjust the temperature.

NOTE:

- *If you push upper part or lower part* of *the temperature selector (1) until “HI” or “LO” appears on the display, the climate control system will operate at maximum heating or cooling. The temperature of the air from the outlets may change suddenly while “LO” or “HI” is displayed, but this is normal.*
- *When you change the unit of temperature in the information display, the unit of temperature in the air conditioning system will be changed. Refer to “Setting mode of information display” (P.12-8) for details.*

Blower speed selector (2)

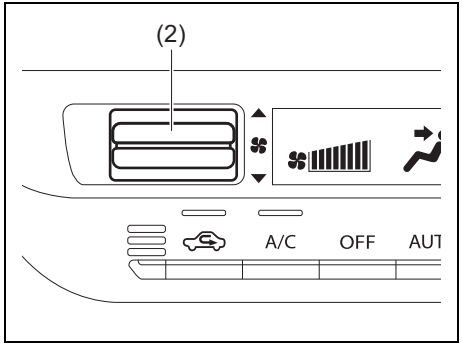

69T070380

The blower speed selector (2) is used to turn on the blower and to select blower speed.

If “AUTO” switch (8) is pushed, the blower speed will vary automatically as the climate control system maintains the selected temperature.

Air intake selector (3)

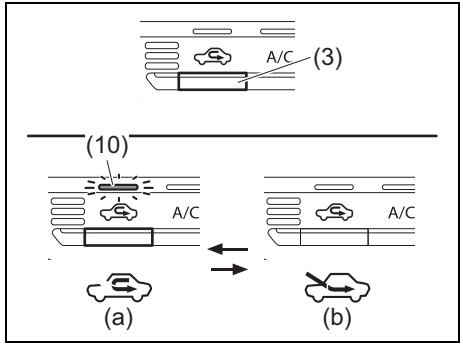

55T070160

Push the air intake selector (3) to change between the recirculated air and fresh air mode.

If “AUTO” switch (8) is pushed, the air intake will vary automatically as the climate control system maintains the selected temperature.

NOTE:
When you select the recirculated air mode is selected, the automatic operation system is deactivated even if you push “AUTO” switch (8).

RECIRCULATED AIR (a)
When this mode is selected, inside air is recirculated. This mode is suitable when driving through dusty or polluted air such as a tunnel, or when attempting to quickly cool down or warm up the interior.

FRESH AIR (b)
When this mode is selected, outside air is introduced. At the same time, the indicator light (10) will turn off.

The fresh air position (b) and recirculated air position (a) are selected alternately each time the air intake selector is pushed.

NOTE:
If you select the recirculated air position (a) for an extended period of time, the air in the vehicle can become contaminated. Therefore, you should occasionally select the fresh air position (b).

Air flow selector (4)

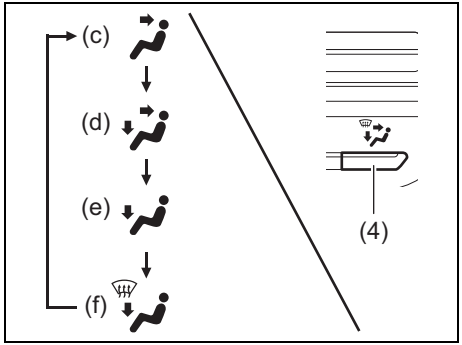

55T070170

Push the air flow selector (4) to change among the following functions. The indication of the selected mode appears in the display.

If “AUTO” switch (8) is pushed, the air flow will vary automatically as the climate control system maintains the selected temperature.

VENTILATION (c)

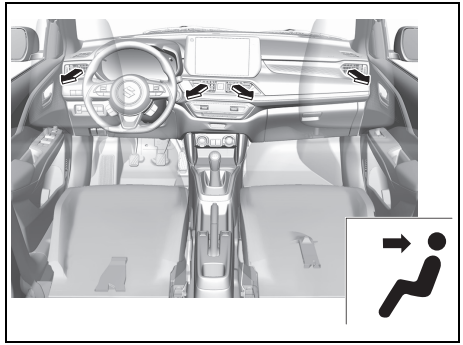

69T070290

Temperature-controlled air comes out of the center and side outlets.

BI-LEVEL (d)

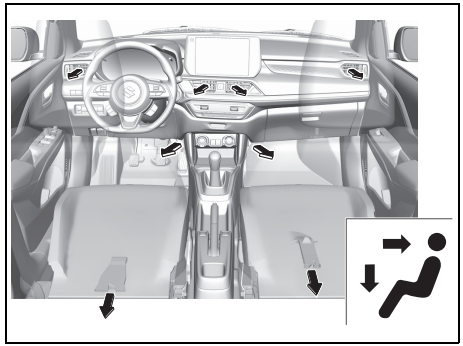

69T070300

Temperature-controlled air comes out of the floor outlets and cooler air comes out of the center and side outlets. When the temperature selector (1) is in the fully cold position or fully hot position, however, the air from the floor outlets and the air from the center and side outlets will be the same temperature.

HEAT (e)

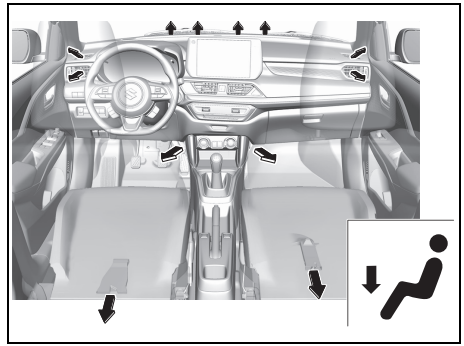

69T070310

Temperature-controlled air comes out of the floor outlets and the side outlets, a small amount of air comes out of the windshield defroster outlets and also comes slightly out of the side defroster outlets.

HEAT & DEFROST (f)

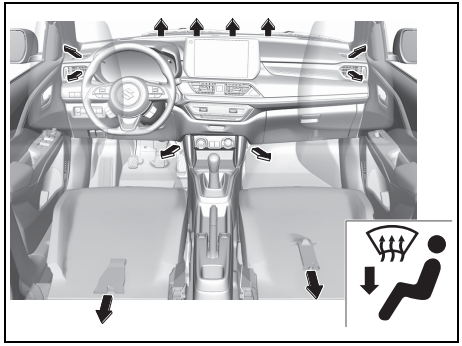

69T070320

Temperature-controlled air comes out of the floor outlets, the windshield defroster outlets, the side defroster outlets and the side outlets.

Defrost switch (5)

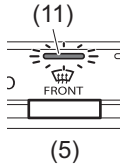

59RN07170

Push the defrost switch (5) to turn on the defroster. At the same time, the indicator light (11) will turn on.

DEFROST

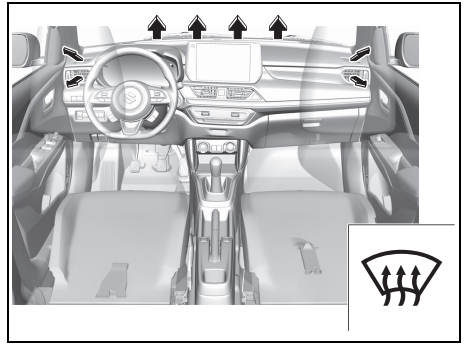

69T070330

Temperature-controlled air comes out of the windshield defroster outlets, the side defroster outlets and the side outlets.

NOTE:
When the defrost switch (5) is pushed to turn on the defroster, the air conditioning system will operate and FRESH AIR mode will be selected automatically. In very cold weather, however, the air conditioning system will not operate.

Air conditioning switch (6)

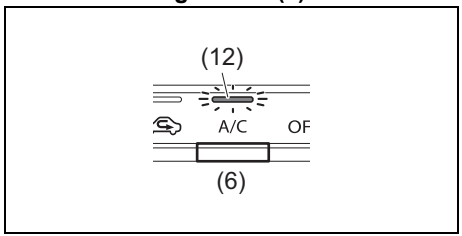

59RN07190

The air conditioning switch (6) is used to turn on and off the air conditioning system only when the blower is on. Push in the switch to turn on the air conditioning system. At the same time, “A/C” will appear on the display and the indicator light (12) will turn on.
Push in the switch again to turn off the air conditioning system. At the same time, “A/C” will go off and the indicator light (12) will turn off.

System operating instructions

Automatic operation

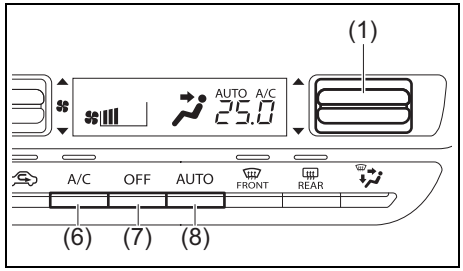

69T070390

You can let the climate control system work automatically. To set the system for fully-automatic operation, follow the procedure below.

1) Start the engine.
2) Push “AUTO” switch (8).
3) Set the desired temperature by pushing the temperature selector (1).
   The blower speed, air intake and air flow are controlled automatically to maintain the set temperature. However, the air flow is not changed to DEFROST position automatically.
4) Push air conditioning switch (6).
   You can use the air conditioning switch (6) to manually turn the air conditioner on or off according to your preference. When you turn the air conditioning switch off, the climate control system cannot lower the inside temperature below outside temperature.
5) To turn the climate control system off, push “OFF” switch (7).

NOTE:
- *If “AUTO” in the display blinks, there is a problem in the heating system and/or air conditioning system. You should have the system inspected by an authorized SUZUKI dealer or a qualified workshop.*
- *To find the temperature at which you are most comfortable, start with the 22°C (72°F) or 25°C (77°F) setting. (the temperature vary depending on vehicle specifications.).*
- *If you push upper part or lower part of the temperature selector (1) until “HI” or “LO” appears on the display, the climate control system will operate at maximum heating or cooling and the blower will run at full speed.*
- *To avoid blowing cold air in cold weather or hot air in hot weather, the system will delay turning on the blower until warmed or cooled air is available.*
- *If your vehicle has been left in the sun with the windows closed, it will cool faster if you open the windows briefly.*
- *Even under the automatic operation, you can set individual selectors to the manual mode. The manually selected functions are maintained, and the other functions remain under automatic operation.*

- *If the windshield and/or the front door windows are fogged, push the defrost switch (5) to turn on the defroster, or push the air flow selector (4) to change the air flow to HEAT & DEFROST position to defog the windows.*
- *To return the blower speed selector (2), air intake selector (3), and air flow selector (4) to automatic operation, push "AUTO" switch (8).*

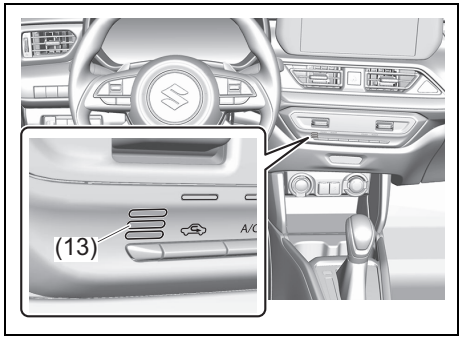

69T070400

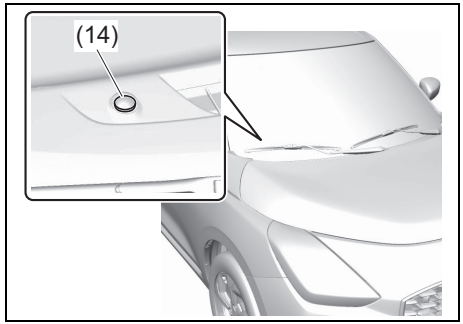

69T070410

Be careful not to cover the interior temperature sensor (13) located on the climate control panel, or the solar sensor (14) located at the top of the driver's side dashboard. These sensors are used by the automatic system to regulate temperature.

Manual operation

You can manually control the climate control system. Set the selectors to the desired positions.

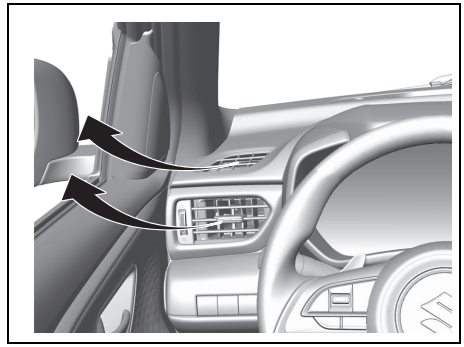

69T070340

NOTE:

If you need maximum defrosting:

- *push the defrost switch (5) to turn on the defroster (the air conditioning system will operate and FRESH AIR mode will be selected automatically),*
- *set the blower speed selector to high,*
- *adjust the temperature selector to "HI" indication on the display, and*
- *adjust the side outlets so the air blows on the side windows.*
- *If the heating performance can no longer perform at a sufficient level due to automatically stopping the engine, press the ENG A-STOP OFF switch to deactivate the ENG A-STOP system. (The engine*

will automatically restart and the air conditioning performance will be restored.)

- *If the windshield and/or the driver's side/ passenger side door windows are fogged during automatically stopping the engine, stop the ENG A-STOP system and restart the engine. Then, turn the air flow selector (4) to change the air flow to the HEAT & DEFROST or DEFROST position to defog the windows.*

Maintenance

If you do not use the air conditioner for a long period, such as during winter, it may not give the best performance when you start using it again. To help maintain optimum performance and durability of your air conditioner, it needs to be run periodically. Operate the air conditioner at least once a month for one minute with the engine idling. This circulates the refrigerant and oil and helps protect the internal components.

If your air conditioner is equipped with air filters, clean or replace them as specified in "Maintenance schedule" in the "INSPECTION AND MAINTENANCE" section. Have this job done by an authorized SUZUKI dealer or a qualified workshop as the lower glove box must be lowered for this job.

NOTE:

- *Your vehicle uses the air conditioning refrigerant HFO-1234yf, commonly called R-1234yf. R-1234yf replaced R-134a for automotive applications. Other refrigerants are available, but only R-1234yf should be used in your vehicle.*

(For the country of Singapore)

- *For repair and parts replacement, have your vehicle repaired or replaced parts by an authorized SUZUKI dealer or a qualified workshop that has the mechanic qualified with SAE J2845 for air conditioner of R-1234yf.*

NOTICE

Using the wrong refrigerant may damage your air conditioning system. Use R-1234yf only. Do not mix or replace the R-1234yf with other refrigerants.

How to use air conditioning system effectively

If you do not use the air conditioner for a long period

Ensure that the air conditioner is used at least once a month, so as to circulate the refrigerant throughout the air conditioning system. The refrigerant contains the oil necessary for lubricating the system's parts, which contributes to maintaining the air conditioner's performance.

Parking under the blazing sun

After parking for a long time under the blazing sun, the interior temperature can become very high. Use the air conditioning system, with the windows or doors opened to ventilate the interior.

Radio antenna

Removal and installation

Type A

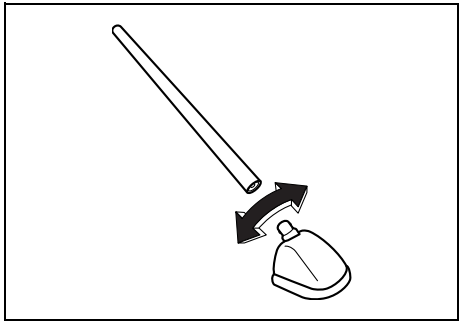

63J055

Type B

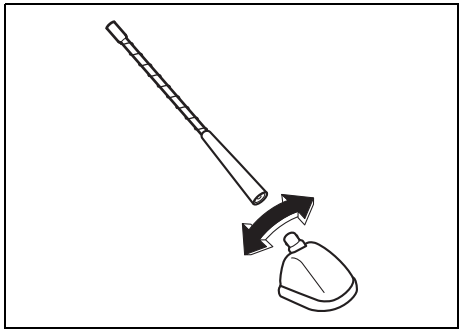

61MM0A113

The radio antenna on the roof is removable. To remove the antenna, turn it counterclockwise. To reinstall the antenna, turn it clockwise firmly by hand.

NOTICE

To avoid damage to the radio antenna:

- **Remove the antenna when using an automatic car wash.**
- **Remove the antenna when the antenna hits anything such as a low ceiling in a parking garage or putting a car cover over your vehicle.**
- **Remove the antenna when parking your vehicle for a long time on a snowy day.**

Installation of radio frequency transmitters

NOTE:
When you intend to use Radio Frequency (RF) transmitting equipment in your vehicle, refer to "Installation of Radio Frequency (RF) Transmitting Equipment" in the end of this book.

NOTICE

Improper installation of mobile communication equipment such as cellular telephones, CB (Citizen's Band) radios or any other wireless transmitters may cause electronic interference with your vehicle's ignition system or any other electrical systems, resulting in vehicle performance problems. Consult an authorized SUZUKI dealer or qualified service technician for advice.

Audio function

When using audio system with appropriate volume not to disturb safe driving

- When playing music or other audio, if a mobile phone is used inside or nearby the vehicle, noise may be heard from the speakers. This does not indicate a malfunction.
- Navigation and audio equipment may not function properly if they are interfered with unauthorized radio waves.
- For further information about the features of the navigation or audio equipment, refer to the instruction manuals.

⚠ WARNING

If you operate the navigation or audio equipment, you may be distracted by them, resulting in an accident.
Do not operate the navigation or audio equipment while driving.

NOTICE

While the engine is stopped, using the navigation or audio equipment for a long period of time may cause the lead-acid battery to run out.
Do not use the navigation or audio equipment for a long period of time while the engine is stopped.

Remote audio controls

Controlling basic functions of the audio system is available using the switches on the steering wheel.
The remote audio switches are available when the engine switch is in ACC or ON mode.

- For operation of an audio system or a navigation system, refer to the supplementary manual, provided along with it.
- The operating procedure may be different depending on an audio system or a navigation system.

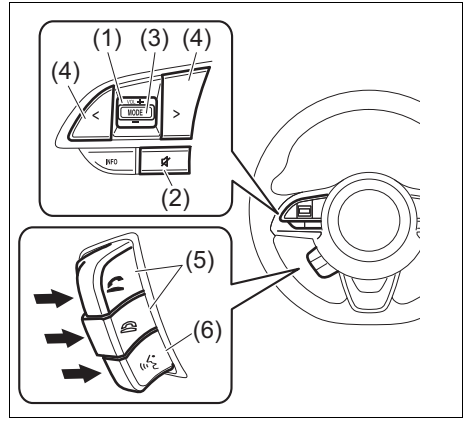

69T070420

(1) Volume switch
(2) Mute switch
(3) “MODE” switch
(4) Select switch
(5) Hands-free switch
(6) Voice recognition switch

Volume switch (1)

You can adjust volume with this switch.

- To increase the volume, press “+” side.
- To decrease the volume, press “–” side.
- The volume will continue to increase or decrease until this switch is released.

Mute switch (2)

To mute this sound, press the switch (2).

“MODE” switch (3)

Every time you press this switch, the audio modes such as radio, etc. will be switched in order.
Depending on a navigation system or an audio systems, you can turn on the system by pressing this switch, even when the equipment itself is turned off.

Select switch (4)

Every time you press this switch, you can select broadcast station or music according to your preference, along with the currently selected mode.

Hands-free switch (5)

You can use this switch for the equipment which has the hands-free function. To use the function, you need to set up for the equipment. Refer to the supplementary manual for details.

Voice recognition switch (6)*

You can use this switch for the equipment which has the voice recognition function. To use the function, you need to set up for the equipment. Refer to the supplementary manual for details.

*: When using Apple CarPlay or Android Auto™ on infotainment system

Apple CarPlay may not be available in your country or region.
For details about Apple CarPlay, visit the following site:
http://www.apple.com/ios/carplay

Android Auto™ may not be available in your country or region.
For details about Android Auto, please refer to the Google support site:
http://support.google.com/androidauto

MEMO

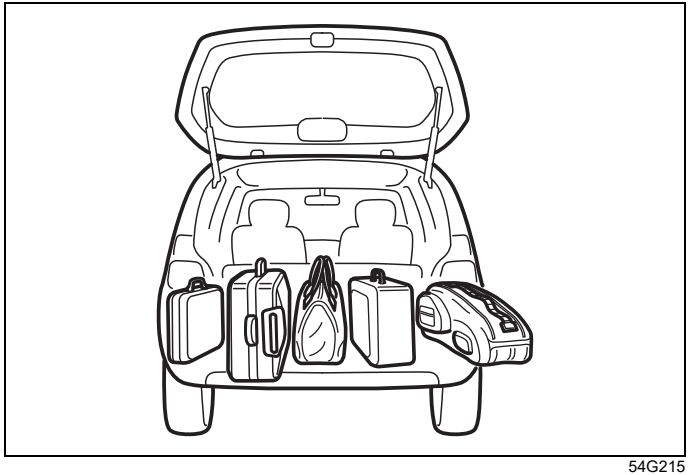

54G215

VEHICLE LOADING AND TOWING

Vehicle loading **8-1**
Trailer towing **8-1**

Vehicle loading

Your vehicle was designed for specific weight capacities. The weight capacities of your vehicle are indicated by the Gross Vehicle Weight Rating (GVWR) and the Permissible maximum Axle Weight (PAW, front and rear). The GVWR and PAW (front and rear) are listed in the “SPECIFICATIONS” section.

GVWR – Maximum permissible overall weight of the fully loaded vehicle (including all the occupants, accessories and cargo plus the trailer nose weight if towing a trailer).
PAW – (Front and Rear) Maximum permissible weight on an individual axle.

Actual weight of the loaded vehicle and actual loads at the front and rear axles can only be determined by weighing the vehicle. Compare these weights to the GVWR and PAW (front and rear). If the gross vehicle weight or the load on either axle exceeds these ratings, you must remove enough weight to bring the load down to the rated capacity.

⚠ WARNING

- **Never overload your vehicle. The gross vehicle weight (sum of the weights of the vehicle, all the occupants, accessories, cargo plus trailer nose weight if towing a trailer) must never exceed the Gross Vehicle Weight Rating (GVWR). In addition, never distribute a load so that the weight on either the front or rear axle exceeds the Permissible maximum Axle Weight (PAW).**
- **Always distribute cargo evenly. To avoid personal injury or damage to your vehicle, always secure cargo to prevent it from shifting if the vehicle moves suddenly. Place heavier objects on the floor and as far forward in the cargo area as possible. Never pile cargo higher than the top of the seat backs.**

Trailer towing

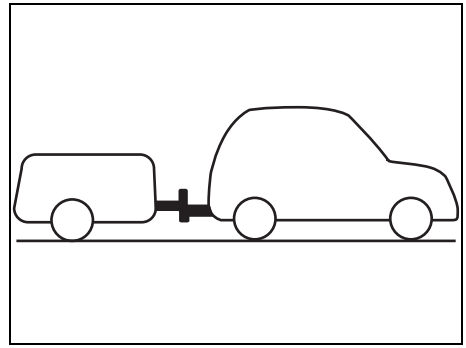

55T080010

Towing a trailer can adversely affect handling, durability and fuel economy. Your vehicle can be used to tow a trailer which does not exceed the towing capacity specified below:

Maximum towing capacity (trailer, cargo & tow bar)

Braked trailer: 1000 kg (2205 lbs)
Unbraked trailer: 400 kg (882 lbs)

⚠ WARNING

For vehicle equipped with the Dual Sensor Brake Support II (DSBS II), if your vehicle is used to tow a trailer, press the Dual Sensor Brake Support II (DSBS II) OFF switch and turn off the Dual Sensor Brake Support II (DSBS II). If not, accidents related to the system being turned on may occur.

NOTICE

- **Trailer towing puts additional stress on the engine, drive train and brakes of your vehicle. Never tow a trailer during the first 960 km (600 miles) of vehicle operation.**
- **When towing by a vehicle with CVT on a long steep hill, try to take some rest on the way to prevent overheat or damage of the engine or transmission.**

Tow bars

Only use a tow bar that is designed to attach to the chassis of your vehicle, and a hitch that is designed to bolt to this tow bar. We recommend that you use a genuine SUZUKI tow bar (available as option), or equivalent.

⚠ WARNING

Never use a tow bar which attaches to the axle or the bumper of your vehicle.

For vehicle where the towing device blocks any of the lights or license plate, observe the following points:

- Do not use the towing devices that cannot be easily removed or repositioned.
- The towing devices must be removed or repositioned when not in use.

Safety chains

Always attach safety chains between your vehicle and trailer. Cross safety chains under the nose of the trailer so that the nose will not drop to the road if the trailer becomes separated from the tow bar. Follow the manufacturer's recommendation for attaching safety chains. Always leave just enough slack to permit full turning. Never allow safety chains to drag on the road.

⚠ WARNING

Never attach safety chains to the bumper of your vehicle. Secure connections so that they cannot come loose.

Trailer lights

Check that your trailer is equipped with lights which meet local requirements. Always check for the proper operation of all trailer lights before you start to tow.

⚠ WARNING

Never connect trailer lights directly into your vehicle's electrical system, or electrical system damage may occur.

NOTE:
If you connect the trailer lights, we recommend that you use a genuine SUZUKI wiring harness kit.

Brakes

⚠ WARNING

If trailer brakes are used, follow all instructions provided by the manufacturer. Never connect to the brake system of your vehicle and never take an electrical supply directly from the wiring harness.

Tyres

⚠ WARNING

When towing a trailer, it is very important for your vehicle and trailer to have properly inflated tyres. Your vehicle's tyres should be inflated to the pressures listed on your vehicle's tyre information label. If laden pressures are listed on the label, the tyres should be inflated to the laden pressures. Inflate trailer tyres according to the specifications provided by the trailer manufacturer.

Mirrors

Check if your vehicle's mirrors meet local requirements for mirrors used on towing vehicles. If they do not, you must install the required mirrors before you tow.

Vehicle/trailer loading

To load your vehicle and trailer properly, you must know how to measure gross trailer weight and trailer nose weight.

Gross trailer weight is the weight of the trailer plus all the cargo in it. You can measure gross trailer weight by putting the fully loaded trailer on a vehicle scale.

Nose weight is the downward force exerted on the tow bar by the trailer coupler, with the trailer fully loaded and the coupler at its normal towing height. This weight can be measured using a bathroom scale.

The weight of your loaded trailer (gross trailer weight) should never exceed towing capacity.

Distribute cargo in your trailer so that nose weight is about 10% of gross trailer weight, but does not exceed "Maximum vertical load" of 60 kg (132 lbs), and does not fall below 25 kg (55 lbs) or 4%, whichever is heavier, on trailer hitch point. You should measure gross trailer weight and nose weight before towing to check that your load is properly distributed.

⚠ WARNING

- **For vehicle equipped with the Dual Sensor Brake Support II (DSBS II), press the Dual Sensor Brake Support II (DSBS II) OFF switch and turn off the Dual Sensor Brake Support II (DSBS II). If not, an accident related to the system being turned on may occur.**

(Continued)

⚠ WARNING

(Continued)

- **Improper weight distribution of your trailer may result in poor vehicle handling and swaying of the trailer. Always check that trailer nose weight is about 10% of gross trailer weight, but does not exceed "Maximum vertical load" of 60 kg (132 lbs), and does not fall below 25 kg (55 lbs) or 4%, whichever is heavier, on trailer hitch point. Also check that the cargo is properly secured. Failure to observe this requirement may result in an accident.**
- **Never overload cargo on your trailer or your vehicle. Gross trailer weight must never exceed towing capacity. Gross vehicle weight (sum of the weights of the vehicle, all the occupants, accessories including tow bars and a trailer hitch, cargo and trailer nose weight) must never exceed the Gross Vehicle Weight Rating (GVWR) listed in "SPECIFICATIONS" section, except as described in NOTE below.**

(For EU countries and U.K.)
NOTE:
Only in the case of towing a trailer, GVW can be exceeded by not more than 60 kg (132 lbs), if road traffic legislation allows it.

Additional trailer towing warnings

⚠ WARNING

- **For vehicle equipped with the Dual Sensor Brake Support II (DSBS II), press the Dual Sensor Brake Support II (DSBS II) OFF switch and turn off the Dual Sensor Brake Support II (DSBS II). If not, an accident related to the system being turned on may occur.**
- **Connect trailer lights and hook up safety chains every time you tow.**

(Continued)

⚠ WARNING

(Continued)

Your vehicle should be handled in a different way when towing a trailer. For the safety of yourself and others, observe the following precautions:

- **Practice turning, stopping, and reversing before you begin towing a trailer in traffic. Do not tow a trailer in traffic until you are confident that you can handle the vehicle and trailer safely.**
- **Never exceed towing speed limits or 80 km/h (50 mph), whichever is lower.**
- **Never drive at a speed that causes shaking or swaying of the trailer. If you notice even the slightest sign of shaking or swaying, slow down.**
- **When roads are wet, slippery or rough, drive at a slower speed than you would on dry or smooth roads. Failure to slow down when road conditions are bad can result in loss of control.**
- **Always have someone guide you when reversing.**

(Continued)

⚠ WARNING

(Continued)

- **Allow adequate stopping distance. Stopping distance is increased when you tow a trailer. For each 16 km/h (10 mph) of speed, allow at least one vehicle and trailer length between you and the vehicle ahead. Allow a greater stopping distance if roads are wet or slippery.**
- **If the trailer has over-run brakes, apply the brakes gradually to avoid snatching caused by the trailer wheels locking.**
- **Slow down before corners and maintain a steady speed while cornering. Deceleration or acceleration while cornering can result in loss of control. Remember that a larger than normal turning radius is needed because the trailer wheels will be closer than vehicle wheels to the inside of the turn.**
- **Avoid sudden acceleration and stopping of the vehicle. Do not make quick maneuvers unless they are necessary.**
- **Slow down in cross winds and be prepared for gusts of wind from large passing vehicles.**

(Continued)

⚠ WARNING

(Continued)

- **Be careful when overtaking other vehicles. Allow enough room for your trailer before changing lanes, and use turn signal lights properly in advance.**
- **Slow down and shift into a lower gear before you reach long or steep downhill grades. It is hazardous to attempt downshifting while you are descending a hill.**
- **Do not step on the brake pedal strongly. This could cause the brakes to over-heat resulting in reduced braking efficiency. Use engine braking as much as possible.**
- **Because of the added trailer weight, your engine may overheat on hot days when going up long or steep hills. Pay attention to your engine temperature. If it indicates overheating, pull off the road and stop the vehicle in a safe place. Refer to “Engine trouble: Overheating” (P.10-34).**

⚠ WARNING

69T080010

When parking your vehicle and connected trailer, always use the following procedure:

1) **Apply the vehicle’s brakes firmly.**
2) **Have another person place wheel chocks under the wheels of the vehicle and the trailer while you are holding the brakes.**
3) **Slowly release the brakes until the wheel chocks absorb the load.**
4) **Fully engage the parking brake.**
5) **Manual transmission – turn off the engine, then shift into reverse or first gear.**
   CVT – shift into “P” (Park) and turn off the engine.

(Continued)

⚠ WARNING

(Continued)
When starting out after parking:
1) **Depress the clutch and start the engine.**
2) **Shift into gear, release the parking brake, and slowly pull away from the chocks.**
3) **Stop, apply the brakes firmly and hold them.**
4) **Have another person remove the chocks.**

NOTICE

Because towing a trailer puts additional stress on your vehicle, more frequent maintenance will be required than under normal driving conditions. Follow the schedule in "Maintenance recommended under severe driving conditions".

Trailer hitch installation points

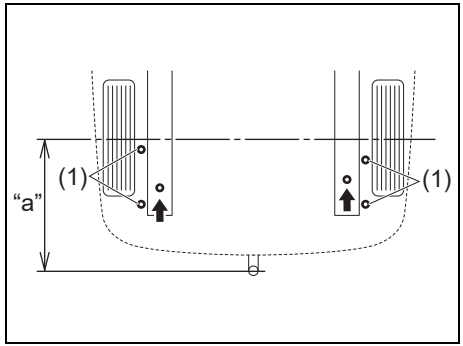

52RM60010

(1) Side

Maximum vertical load on trailer hitch point (EU)
60 kg (132 lbs)

Maximum permissible overhang "a"

2WD model:
686 mm (27.0 in.)

4WD model:
684 mm (26.9 in.)

MEMO

INSPECTION AND MAINTENANCE

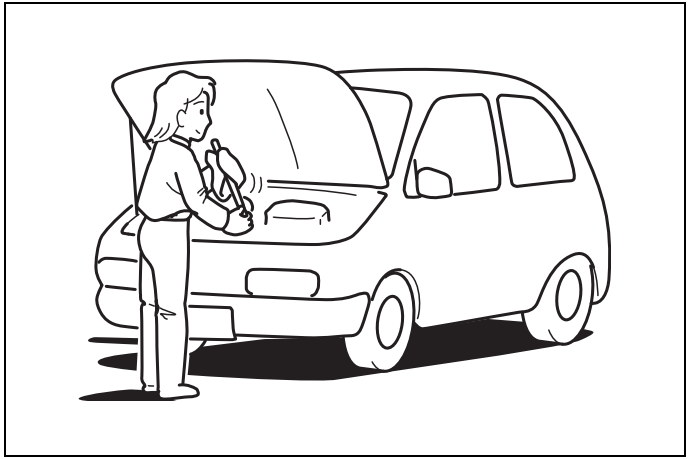

60G410

Maintenance schedule 9-2
Periodic maintenance schedule
(for European countries and Israel) 9-3
Maintenance recommended under severe driving conditions
(for European countries and Israel) 9-8
Periodic maintenance schedule
(except for European countries and Israel) 9-13
Maintenance recommended under severe driving conditions
(except for European countries and Israel) 9-18
Drive belt 9-23
Engine oil and filter 9-23
Engine coolant 9-25
Air cleaner 9-26
Spark plugs 9-27
Gear oil 9-27
Clutch 9-28
Continuously Variable Transmission (CVT) fluid 9-29
Brakes 9-30
Steering wheel 9-34
Tyres 9-34
Battery 9-38
Fuses 9-40
Headlight aiming 9-42
Bulb replacement 9-43
Wiper blades 9-51
Windshield washer fluid 9-54
Air conditioning system 9-55
Keyless push start system remote controller
battery replacement 9-56
Preparation before winter season 9-58

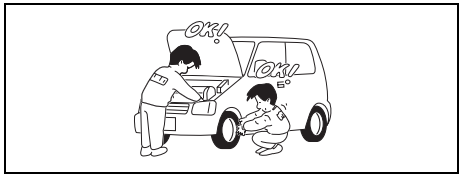

59RN05750

⚠ WARNING

Take extreme care when working on your vehicle to prevent accidental injury. Carefully observe the following precautions:

- **To prevent damage or unintended activation of the airbag system or seat belt pretensioner system, check that the lead-acid battery is disconnected and the ignition mode has been LOCK (OFF) for at least 90 seconds before performing any electrical service work on your SUZUKI vehicle. Do not touch airbag system components, seat belt pretensioner system components or wires.**
  The wires are wrapped with yellow tape or yellow tubing, and the couplers are yellow for easy identification.
- **Do not leave the engine running in garages or other confined areas.**

(Continued)

⚠ WARNING

(Continued)

- **When the engine is running, keep hands, clothing, tools, and other objects away from the fan and drive belt. Even though the fan may not be moving, it can automatically turn on without warning.**
- **When it is necessary to perform service work with the engine running, check that the parking brake is set fully and the transmission is in Neutral (for manual transmission vehicle) or Park (for CVT vehicle).**
- **Do not touch ignition wires or other ignition system parts when starting the engine or when the engine is running, or you could receive an electric shock.**
- **Be careful not to touch a hot engine, exhaust manifold and pipes, muffler, radiator and water hoses.**
- **Do not allow smoking, sparks, or flames around fuel or the battery. Flammable fumes are present.**
- **Do not get under your vehicle if it is supported only with the portable jack provided in your vehicle.**
- **Be careful not to cause accidental short circuits between the positive and negative battery terminals.**

(Continued)

⚠ WARNING

(Continued)

- **Keep used oil, coolant, and other fluids away from children and pets. Dispose of used fluids properly; never pour them on the ground, into sewers, etc.**
- **While pouring engine oil, brake fluid and coolant, do not spill them. Their adhesion to the surrounding parts may cause a fire or malfunction.**

Maintenance schedule

The following table shows the timing when you should perform regular maintenance on your vehicle. This table shows in miles, kilometers and months when you should perform inspections, adjustments, lubrication and other services. These intervals should be shortened if driving is usually done under severe conditions (refer to “Maintenance recommended under severe driving conditions” [P.9-8] or [P.9-18]).

⚠ WARNING

SUZUKI recommends that maintenance on items marked with an asterisk (*) be performed by an authorized SUZUKI dealer or a qualified workshop or a qualified workshop. If you are qualified, you may perform maintenance on the unmarked items by referring to the instructions in this section. If you are not sure whether you can successfully complete any of the unmarked maintenance jobs, ask an authorized SUZUKI dealer or a qualified workshop to do the maintenance for you.

NOTICE

Whenever it becomes necessary to replace parts on your vehicle, it is recommended that you use genuine SUZUKI replacement parts or their equivalent.

Periodic maintenance schedule (for European countries and Israel)

"R" : Replace or Change
"I" : Inspect, clean, adjust, lubricate or replace as necessary

NOTE:
This table shows the service schedule up to 240000 km (150000 miles). Beyond 240000 km (150000 miles), perform the same services at the same intervals shown in the chart.

Interval: This interval should be judged by odometer reading or months, whichever comes first.		km (x1000)	20	40	60	80	100	120
		miles (x1000)	12.5	25	37.5	50	62.5	75
		months	12	24	36	48	60	72
ENGINE								
*1-1. Engine accessory drive belt	Tension check, *Replacement		I	I	I	R	I	I
1-2. Engine oil and engine oil filter	ACEA Standards or SUZUKI GENUINE OIL (#1)		R	R	R	R	R	R
			Refer to “Oil change request light (if equipped)” (P.4-55) or “Setting mode of information display” (P.12-8).					
	Other than ACEA Standards or SUZUKI GENUINE OIL (#1)		Replace every 15000 km (9375 miles) or 12 months. Refer to “Oil change request light (if equipped)” (P.4-55) or “Setting mode of information display” (P.12-8).					
1-3. Engine coolant	SUZUKI LLC: Super (Blue) (#2)	First time only:	Replace at 160000 km (100000 miles) or 96 months.					
		Second time and after:	Replace every 80000 km (50000 miles) or 48 months.					
	SUZUKI LLC: Standard (Green)		Replace every 40000 km (25000 miles) or 36 months.					
*1-4. Exhaust system (except catalyst)			–	I	–	I	–	I
IGNITION								
2-1. Spark plugs	Iridium plug		Replace every 100000 km (62500 miles) or 84 months.					
FUEL								
3-1. Air cleaner filter element	Paved-road		Inspect every 20000 km (12500 miles) or 12 months.					
			Replace every 40000 km (25000 miles) or 36 months.					
	Dusty condition		Refer to “Severe driving condition” schedule.					
*3-2. Fuel lines			–	I	–	I	–	I
*3-3. Fuel tank			–	I	–	I	–	I
EMISSION CONTROL SYSTEM								
*4-1. PCV valve			–	–	–	I	–	–
*4-2. Fuel evaporative emission control system			–	–	–	–	–	I

#1: For further details, see “Engine oil and filter” in this section.
#2: Perform the engine coolant level check under the daily inspection in the “OPERATING YOUR VEHICLE” section.
If you use the engine coolant other than “SUZUKI LLC: Super (Blue)” for replacement, follow the schedule of “SUZUKI LLC: Standard (Green)”.

Interval: This interval should be judged by odometer reading or months, whichever comes first.		km (x1000)	140	160	180	200	220	240
		miles (x1000)	87.5	100	112.5	125	137.5	150
		months	84	96	108	120	132	144
ENGINE								
*1-1. Engine accessory drive belt	Tension check, *Replacement		I	R	I	I	I	R
1-2. Engine oil and engine oil filter	ACEA Standards or SUZUKI GENUINE OIL (#1)		R	R	R	R	R	R
			Refer to “Oil change request light (if equipped)” (P.4-55) or “Setting mode of information display” (P.12-8).					
	Other than ACEA Standards or SUZUKI GENUINE OIL (#1)		Replace every 15000 km (9375 miles) or 12 months. Refer to “Oil change request light (if equipped)” (P.4-55) or “Setting mode of information display” (P.12-8).					
1-3. Engine coolant	SUZUKI LLC: Super (Blue) (#2)	First time only:	Replace at 160000 km (100000 miles) or 96 months.					
		Second time and after:	Replace every 80000 km (50000 miles) or 48 months.					
	SUZUKI LLC: Standard (Green)		Replace every 40000 km (25000 miles) or 36 months.					
*1-4. Exhaust system (except catalyst)			–	I	–	I	–	I
IGNITION								
2-1. Spark plugs	Iridium plug		Replace every 100000 km (62500 miles) or 84 months.					
FUEL								
3-1. Air cleaner filter element	Paved-road		Inspect every 20000 km (12500 miles) or 12 months.					
			Replace every 40000 km (25000 miles) or 36 months.					
	Dusty condition		Refer to “Severe driving condition” schedule.					
*3-2. Fuel lines			–	I	–	I	–	I
*3-3. Fuel tank			–	I	–	I	–	I
EMISSION CONTROL SYSTEM								
*4-1. PCV valve			–	I	–	–	–	I
*4-2. Fuel evaporative emission control system			–	–	–	–	–	I

#1: For further details, see “Engine oil and filter” in this section.
#2: Perform the engine coolant level check under the daily inspection in the “OPERATING YOUR VEHICLE” section.
If you use the engine coolant other than “SUZUKI LLC: Super (Blue)” for replacement, follow the schedule of “SUZUKI LLC: Standard (Green)”.

Interval: This interval should be judged by odometer reading or months, whichever comes first.		km (x1000)	20	40	60	80	100	120
		miles (x1000)	12.5	25	37.5	50	62.5	75
		months	12	24	36	48	60	72
BRAKE								
*5-1. Brake discs and pads	(front)		I	I	I	I	I	I
Brake drums and shoes	(rear)		–	I	–	I	–	I
*5-2. Brake hoses and pipes			–	I	–	I	–	I
5-3. Brake pedal			I	I	I	I	I	I
*5-4. Brake fluid (#3)			I	R	I	R	I	R
5-5. Parking brake lever and cable		Check, *Adjustment (1st 20000 km only)	I	–	–	–	–	–
CHASSIS AND BODY								
*6-1. Clutch pedal			I	I	I	I	I	I
*6-2. Clutch fluid (#3)			I	R	I	R	I	R
6-3. Tyres/Wheels			I	I	I	I	I	I
*6-4. Wheel bearings			–	I	–	I	–	I
*6-5. Drive axle boots			–	I	–	I	–	I
*6-6. Propeller shafts (4WD)			–	I	–	I	–	I
*6-7. Suspension system			–	I	–	I	–	I
*6-8. Steering system			–	I	–	I	–	I
*6-9. Manual transmission oil	Genuine “SUZUKI GEAR OIL 75W ”		–	I	–	I	–	I
	Other than “SUZUKI GEAR OIL 75W ”		–	R	–	R	–	R
6-10. Continuously Variable Transmission (CVT)		Fluid level	–	I	–	I	–	I
*6-11. Transfer oil (4WD)			–	I	–	I	–	I
*6-12. Rear differential oil (4WD)			–	I	–	I	–	I
6-13. All latches, hinges and locks			–	I	–	I	–	I
*6-14. Air conditioner filter element			–	I	R	–	I	R

#3: Clutch fluid is supplied from brake fluid reservoir.

⚠ WARNING

The shock absorbers are filled with high pressure gas. Never attempt to disassemble them or throw them into a fire. Avoid storing them near a heater or heating device. When scrapping the absorber, the gas must be released from the absorber safely. Ask an authorized SUZUKI dealer or a qualified workshop for assistance.

Interval: This interval should be judged by odometer reading or months, whichever comes first.		km (x1000)	140	160	180	200	220	240
		miles (x1000)	87.5	100	112.5	125	137.5	150
		months	84	96	108	120	132	144
BRAKE								
*5-1. Brake discs and pads	(front)		I	I	I	I	I	I
Brake drums and shoes	(rear)		–	I	–	I	–	I
*5-2. Brake hoses and pipes			–	I	–	I	–	I
5-3. Brake pedal			I	I	I	I	I	I
*5-4. Brake fluid (#3)			I	R	I	R	I	R
5-5. Parking brake lever and cable		Check, *Adjustment (1st 20000 km only)	–	–	–	–	–	–
CHASSIS AND BODY								
*6-1. Clutch pedal			I	I	I	I	I	I
*6-2. Clutch fluid (#3)			I	R	I	R	I	R
6-3. Tyres/Wheels			I	I	I	I	I	I
*6-4. Wheel bearings			–	I	–	I	–	I
*6-5. Drive axle boots			–	I	–	I	–	I
*6-6. Propeller shafts (4WD)			–	I	–	I	–	I
*6-7. Suspension system			–	I	–	I	–	I
*6-8. Steering system			–	I	–	I	–	I
*6-9. Manual transmission oil	Genuine “SUZUKI GEAR OIL 75W”		–	I	–	I	–	I
	Other than “SUZUKI GEAR OIL 75W”		–	R	–	R	–	R
6-10. Continuously Variable Transmission (CVT)		Fluid level	–	I	–	I	–	I
*6-11. Transfer oil (4WD)			–	R	–	I	–	I
*6-12. Rear differential oil (4WD)			–	R	–	I	–	I
6-13. All latches, hinges and locks			–	I	–	I	–	I
*6-14. Air conditioner filter element			–	I	R	–	I	R

#3: Clutch fluid is supplied from brake fluid reservoir.

NOTE:
4WD: 4-wheel drive

Maintenance recommended under severe driving conditions (for European countries and Israel)

Follow this schedule if your vehicle is mainly operated under one or more of the following conditions:
- When most trips are less than 6 km (4 miles).
- When most trips are less than 16 km (10 miles) and outside temperature remains below freezing.
- Idling and/or low-speed operation in stop-and-go traffic.
- Operating in extremely cold weather and/or on salted roads.
- Operating in rough and/or muddy areas.
- Operating in dusty areas.
- Repeated high speed drive or high engine revolutions.
- Towing a trailer, if admitted.

Schedule should also be followed if the vehicle is used for delivery service, police, taxi or other commercial applications.

Interval: This interval should be judged by odometer reading or months, whichever comes first.		km (x1000)	10	20	30	40	50	60
		miles (x1000)	6.25	12.5	18.75	25	31.25	37.5
		months	6	12	18	24	30	36
ENGINE								
*1-1. Engine accessory drive belt	Tension check, *Replacement		I	I	I	R	I	I
1-2. Engine oil and engine oil filter	ACEA Standards or SUZUKI GENUINE OIL (#1)		R	R	R	R	R	R
			Refer to “Oil change request light (if equipped)” (P.4-55) or “Setting mode of information display” (P.12-8).					
	Other than ACEA Standards or SUZUKI GENUINE OIL (#1)		Replace every 7500 km (4687 miles) or 6 months. Refer to “Oil change request light (if equipped)” (P.4-55) or “Setting mode of information display” (P.12-8).					
1-3. Engine coolant	SUZUKI LLC: Super (Blue) (#2)	First time only:	Replace at 160000 km (100000 miles) or 96 months.					
		Second time and after:	Replace every 80000 km (50000 miles) or 48 months.					
	SUZUKI LLC: Standard (Green)		Replace every 40000 km (25000 miles) or 36 months.					
*1-4. Exhaust system (except catalyst)			–	–	–	I	–	–
IGNITION								
2-1. Spark plugs	Iridium plug		Replace every 30000 km (18750 miles) or 24 months.					
FUEL								
3-1. Air cleaner filter element*1			Inspect every 2500 km (1562 miles).					
			Replace every 30000 km (18750 miles) or 24 months.					
*3-2. Fuel lines			–	–	–	I	–	–
*3-3. Fuel tank			–	–	–	I	–	–
EMISSION CONTROL SYSTEM								
*4-1. PCV valve			Inspect every 80000 km (50000 miles) or 48 months.					
*4-2. Fuel evaporative emission control system			–	–	–	–	–	–

#1: For further details, see “Engine oil and filter” in this section.
#2: Perform the engine coolant level check under the daily inspection in the “OPERATING YOUR VEHICLE” section.
If you use the engine coolant other than “SUZUKI LLC: Super (Blue)” for replacement, follow the schedule of “SUZUKI LLC: Standard (Green)”.

*1 Inspect more frequently if the vehicle is used under dusty conditions.

Interval: This interval should be judged by odometer reading or months, whichever comes first.		km (x1000)	70	80	90	100	110	120
		miles (x1000)	43.75	50	56.25	62.5	68.75	75
		months	42	48	54	60	66	72
ENGINE								
*1-1. Engine accessory drive belt	Tension check, *Replacement		I	R	I	I	I	R
1-2. Engine oil and engine oil filter	ACEA Standards or SUZUKI GENUINE OIL (#1)		R	R	R	R	R	R
			Refer to “Oil change request light (if equipped)” (P.4-55) or “Setting mode of information display” (P.12-8).					
	Other than ACEA Standards or SUZUKI GENUINE OIL (#1)		Replace every 7500 km (4687 miles) or 6 months. Refer to “Oil change request light (if equipped)” (P.4-55) or “Setting mode of information display” (P.12-8).					
1-3. Engine coolant	SUZUKI LLC: Super (Blue) (#2)	First time only:	Replace at 160000 km (100000 miles) or 96 months.					
		Second time and after:	Replace every 80000 km (50000 miles) or 48 months.					
	SUZUKI LLC: Standard (Green)		Replace every 40000 km (25000 miles) or 36 months.					
*1-4. Exhaust system (except catalyst)			–	I	–	–	–	I
IGNITION								
2-1. Spark plugs	Iridium plug		Replace every 30000 km (18750 miles) or 24 months.					
FUEL								
3-1. Air cleaner filter element*1			Inspect every 2500 km (1562 miles).					
			Replace every 30000 km (18750 miles) or 24 months.					
*3-2. Fuel lines			–	I	–	–	–	I
*3-3. Fuel tank			–	I	–	–	–	I
EMISSION CONTROL SYSTEM								
*4-1. PCV valve			Inspect every 80000 km (50000 miles) or 48 months.					
*4-2. Fuel evaporative emission control system			–	–	–	–	–	I

#1: For further details, see “Engine oil and filter” in this section.
#2: Perform the engine coolant level check under the daily inspection in the “OPERATING YOUR VEHICLE” section.
If you use the engine coolant other than “SUZUKI LLC: Super (Blue)” for replacement, follow the schedule of “SUZUKI LLC: Standard (Green)”.

*1 Inspect more frequently if the vehicle is used under dusty conditions.

Interval: This interval should be judged by odometer reading or months, whichever comes first.		km (x1000)	10	20	30	40	50	60
		miles (x1000)	6.25	12.5	18.75	25	31.25	37.5
		months	6	12	18	24	30	36
BRAKE								
*5-1. Brake discs and pads	(front)		–	I	–	I	–	I
Brake drums and shoes	(rear)		–	–	–	I	–	–
*5-2. Brake hoses and pipes			–	–	–	I	–	–
5-3. Brake pedal			–	I	–	I	–	I
*5-4. Brake fluid (#3)			–	I	–	R	–	I
5-5. Parking brake lever and cable		Check, *Adjustment (1st 20000 km only)	–	I	–	–	–	–
CHASSIS AND BODY								
*6-1. Clutch pedal			–	I	–	I	–	I
*6-2. Clutch fluid (#3)			–	I	–	R	–	I
6-3. Tyres/Wheels			–	I	–	I	–	I
*6-4. Wheel bearings			–	I	–	I	–	I
*6-5. Drive axle boots			–	–	–	I	–	–
*6-6. Propeller shafts (4WD)			–	I	–	I	–	I
*6-7. Suspension system			–	–	–	I	–	–
*6-8. Steering system			–	–	–	I	–	–
*6-9. Manual transmission oil	Genuine “SUZUKI GEAR OIL 75W ”		–	I	–	I	–	I
	Other than “SUZUKI GEAR OIL 75W ”		–	R	–	R	–	R
6-10. Continuously Variable Transmission (CVT)		Fluid level	–	I	–	I	–	I
		*Fluid deterioration check*2	–	I	–	I	–	I
		Fluid change	Replace every 70000 km (43750 miles)					
*6-11. Transfer oil (4WD)			–	I	–	R	–	I
*6-12. Rear differential oil (4WD)			–	I	–	R	–	I
6-13. All latches, hinges and locks			–	–	–	I	–	–
*6-14. Air conditioner filter element*3			–	I	–	I	–	R

#3: Clutch fluid is supplied from brake fluid reservoir.

*2 Check or replace as necessary if you usually drive with high speed or high engine revolutions.
*3 Clean more frequently if the air flow from the air conditioner decreases.

⚠ WARNING

The shock absorbers are filled with high pressure gas. Never attempt to disassemble them or throw them into a fire. Avoid storing them near a heater or heating device. When scrapping the absorber, the gas must be released from the absorber safely. Ask an authorized SUZUKI dealer or a qualified workshop for assistance.

Interval: This interval should be judged by odometer reading or months, whichever comes first.		km (x1000)	70	80	90	100	110	120
		miles (x1000)	43.75	50	56.25	62.5	68.75	75
		months	42	48	54	60	66	72
BRAKE								
*5-1. Brake discs and pads	(front)		–	I	–	I	–	I
Brake drums and shoes	(rear)		–	I	–	–	–	I
*5-2. Brake hoses and pipes			–	I	–	–	–	I
5-3. Brake pedal			–	I	–	I	–	I
*5-4. Brake fluid (#3)			–	R	–	I	–	R
5-5. Parking brake lever and cable		Check, *Adjustment (1st 20000 km only)	–	–	–	–	–	–
CHASSIS AND BODY								
*6-1. Clutch pedal			–	I	–	I	–	I
*6-2. Clutch fluid (#3)			–	R	–	I	–	R
6-3. Tyres/Wheels			–	I	–	I	–	I
*6-4. Wheel bearings			–	I	–	I	–	I
*6-5. Drive axle boots			–	I	–	–	–	I
*6-6. Propeller shafts (4WD)			–	I	–	I	–	I
*6-7. Suspension system			–	I	–	–	–	I
*6-8. Steering system			–	I	–	–	–	I
*6-9. Manual transmission oil	Genuine “SUZUKI GEAR OIL 75W ”		–	R	–	I	–	I
	Other than “SUZUKI GEAR OIL 75W ”		–	R	–	R	–	R
6-10. Continuously Variable Transmission (CVT)		Fluid level	–	I	–	I	–	I
		*Fluid deterioration check*2	–	I	–	I	–	I
		Fluid change	Replace every 70000 km (43750 miles)					
*6-11. Transfer oil (4WD)			–	R	–	I	–	R
*6-12. Rear differential oil (4WD)			–	R	–	I	–	R
6-13. All latches, hinges and locks			–	I	–	–	–	I
*6-14. Air conditioner filter element*3			–	I	–	I	–	R

#3: Clutch fluid is supplied from brake fluid reservoir.

NOTE:
- *4WD: 4-wheel drive*
- *This table shows the service schedule up to 120000 km (75000 miles).*
  Beyond 120000 km (75000 miles), perform the same services at the same intervals shown in the chart.

*2 Check or replace as necessary if you usually drive with high speed or high engine revolutions.
*3 Clean more frequently if the air flow from the air conditioner decreases.

Periodic maintenance schedule (except for European countries and Israel)

"R" : Replace or Change
"I" : Inspect, clean, adjust, lubricate or replace as necessary

NOTE:
This table shows the service schedule up to 180000 km (108000 miles). Beyond 180000 km (108000 miles), perform the same services at the same intervals shown in the chart.

Interval: This interval should be judged by odometer reading or months, whichever comes first.		km (x1000)	15	30	45	60	75	90
		miles (x1000)	9	18	27	36	45	54
		months	12	24	36	48	60	72
ENGINE								
*1-1. Engine accessory drive belt	Tension check, *Replacement		I	I	I	I	R	I
1-2. Engine oil and engine oil filter	[Vehicle without oil change request light (#1,2)]		R	R	R	R	R	R
	[Vehicle with oil change request light (#1)] ACEA Standards or SUZUKI GENUINE OIL (#2)		Replace every 20000 km (12500 miles) or 12 months. Refer to “Oil change request light (if equipped)” (P.4-55) or “Setting mode of information display” (P.12-8).					
	[Vehicle with oil change request light (#1,3)] Other than ACEA Standards or SUZUKI GENUINE OIL (#2)		R	R	R	R	R	R
			Refer to “Oil change request light (if equipped)” (P.4-55) or “Setting mode of information display” (P.12-8).					
1-3. Engine coolant	SUZUKI LLC: Super (Blue) (#4)	First time only:	Replace at 150000 km (90000 miles) or 96 months.					
		Second time and after:	Replace every 75000 km (45000 miles) or 48 months.					
	SUZUKI LLC: Standard (Green)		–	–	R	–	–	R
*1-4. Exhaust system (except catalyst)			–	I	–	I	–	I
IGNITION								
2-1. Spark plugs	Iridium plug		Replace every 105000 km (63000 miles) or 84 months.					
FUEL								
3-1. Air cleaner filter element	Paved-road		I	I	R	I	I	R
	Dusty condition		Refer to “Severe driving condition” schedule.					
*3-2. Fuel lines			–	I	–	I	–	I
*3-3. Fuel filter			Replace every 105000 km (63000 miles).					
*3-4. Fuel tank			–	–	I	–	–	I
EMISSION CONTROL SYSTEM								
*4-1. PCV valve			–	–	–	–	–	I
*4-2. Fuel evaporative emission control system			–	–	–	–	–	I

#1: Vehicle with oil change request light has the oil life monitoring system and related oil change request light in the instrument cluster. For further details, see “Oil change request light (if equipped)” or “Setting mode of information display” in the “SPECIFICATIONS” section.

#2: For further details, see “Engine oil and filter” in this section.

#3: If you replace ACEA Standards or SUZUKI genuine engine oil by the engine oil other than ACEA Standards or SUZUKI genuine engine oil, you need to change the oil change request light setting. For further details, see “Oil change request light” in the “INSTRUMENT CLUSTER” section.

#4: Perform the engine coolant level check under the daily inspection in the “OPERATING YOUR VEHICLE” section.
If you use the engine coolant other than “SUZUKI LLC: Super (Blue)” for replacement, follow the schedule of “SUZUKI LLC: Standard (Green)”. (Replace every 45000 km (27000 miles) or 36 months.)

Interval: This interval should be judged by odometer reading or months, whichever comes first.		km (x1000)	105	120	135	150	165	180
		miles (x1000)	63	72	81	90	99	108
		months	84	96	108	120	132	144
ENGINE								
*1-1. Engine accessory drive belt	Tension check, *Replacement		I	I	I	R	I	I
1-2. Engine oil and engine oil filter	[Vehicle without oil change request light (#1,2)]		R	R	R	R	R	R
	[Vehicle with oil change request light (#1)] ACEA Standards or SUZUKI GENUINE OIL (#2)		Replace every 20000 km (12500 miles) or 12 months. Refer to “Oil change request light (if equipped)” (P.4-55) or “Setting mode of information display” (P.12-8).					
	[Vehicle with oil change request light (#1,3)] Other than ACEA Standards or SUZUKI GENUINE OIL (#2)		R	R	R	R	R	R
			Refer to “Oil change request light (if equipped)” (P.4-55) or “Setting mode of information display” (P.12-8).					
1-3. Engine coolant	SUZUKI LLC: Super (Blue) (#4)	First time only:	Replace at 150000 km (90000 miles) or 96 months.					
		Second time and after:	Replace every 75000 km (45000 miles) or 48 months.					
	SUZUKI LLC: Standard (Green)		–	–	R	–	–	R
*1-4. Exhaust system (except catalyst)			–	I	–	I	–	I
IGNITION								
2-1. Spark plugs	Iridium plug		Replace every 105000 km (63000 miles) or 84 months.					
FUEL								
3-1. Air cleaner filter element	Paved-road		I	I	R	I	I	R
	Dusty condition		Refer to “Severe driving condition” schedule.					
*3-2. Fuel lines			–	I	–	I	–	I
*3-3. Fuel filter			Replace every 105000 km (63000 miles).					
*3-4. Fuel tank			–	–	I	–	–	I
EMISSION CONTROL SYSTEM								
*4-1. PCV valve			–	–	–	–	–	I
*4-2. Fuel evaporative emission control system			–	–	–	–	–	I

#1: Vehicle with oil change request light has the oil life monitoring system and related oil change request light in the instrument cluster. For further details, see “Oil change request light (if equipped)” or “Setting mode of information display” in the “SPECIFICATIONS” section.

#2: For further details, see “Engine oil and filter” in this section.

#3: If you replace ACEA Standards or SUZUKI genuine engine oil by the engine oil other than ACEA Standards or SUZUKI genuine engine oil, you need to change the oil change request light setting. For further details, see “Oil change request light” in the “INSTRUMENT CLUSTER” section.

#4: Perform the engine coolant level check under the daily inspection in the “OPERATING YOUR VEHICLE” section.
If you use the engine coolant other than “SUZUKI LLC: Super (Blue)” for replacement, follow the schedule of “SUZUKI LLC: Standard (Green)”. (Replace every 45000 km (27000 miles) or 36 months.)

Interval: This interval should be judged by odometer reading or months, whichever comes first.		km (x1000)	15	30	45	60	75	90
		miles (x1000)	9	18	27	36	45	54
		months	12	24	36	48	60	72
BRAKE								
*5-1. Brake discs and pads	(front)		I	I	I	I	I	I
Brake drums and shoes	(rear)		–	I	–	I	–	I
*5-2. Brake hoses and pipes			–	I	–	I	–	I
5-3. Brake pedal			I	I	I	I	I	I
*5-4. Brake fluid (#5)			I	R	I	R	I	R
5-5. Parking brake lever and cable		Check, *Adjustment (1st 15000 km only)	I	–	–	–	–	–
CHASSIS AND BODY								
*6-1. Clutch pedal			I	I	I	I	I	I
*6-2. Clutch fluid (#5)			I	R	I	R	I	R
6-3. Tyres/Wheels (#6)			I	I	I	I	I	I
*6-4. Wheel bearings (#7)			–	I	–	I	–	I
*6-5. Drive axle boots (#8)			–	–	I	–	–	I
*6-6. Suspension system (#9)			–	I	–	I	–	I
*6-7. Steering system (#10)			–	I	–	I	–	I
*6-8. Manual transmission oil	Genuine “SUZUKI GEAR OIL 75W”		–	I	–	I	–	I
	Other than “SUZUKI GEAR OIL 75W”	(I: 1st 15000 km only)	I	–	R	–	–	R
6-9. Continuously Variable Transmission (CVT)		Fluid level	–	I	–	I	–	I
6-10. All latches, hinges and locks			–	I	–	I	–	I
*6-11. Air conditioner filter element			–	I	R	–	I	R

#5: Clutch fluid is supplied from brake fluid reservoir.
#6: Tyres/Wheels (including tyre rotation) for Mexico models :Inspect every 10000 km (6000 miles) or 12 months.
#7: Wheel bearings for Mexico models :Inspect every 10000 km (6000 miles) or 12 months.
#8: Drive axle boots for Mexico models :Inspect every 10000 km (6000 miles) or 12 months.
#9: Suspension system for Mexico models :Inspect every 10000 km (6000 miles) or 12 months.
#10:Steering system for Mexico models :Inspect every 10000 km (6000 miles) or 12 months.

⚠ WARNING

The shock absorbers are filled with high pressure gas. Never attempt to disassemble them or throw them into a fire. Avoid storing them near a heater or heating device. When scrapping the absorber, the gas must be released from the absorber safely. Ask an authorized SUZUKI dealer or a qualified workshop for assistance.

Interval: This interval should be judged by odometer reading or months, whichever comes first.								
		km (x1000)	105	120	135	150	165	180
		miles (x1000)	63	72	81	90	99	108
		months	84	96	108	120	132	144
BRAKE								
*5-1. Brake discs and pads	(front)		I	I	I	I	I	I
Brake drums and shoes	(rear)		–	I	–	I	–	I
*5-2. Brake hoses and pipes			–	I	–	I	–	I
5-3. Brake pedal			I	I	I	I	I	I
*5-4. Brake fluid (#5)			I	R	I	R	I	R
5-5. Parking brake lever and cable		Check, *Adjustment (1st 15000 km only)	–	–	–	–	–	–
CHASSIS AND BODY								
*6-1. Clutch pedal			I	I	I	I	I	I
*6-2. Clutch fluid (#5)			I	R	I	R	I	R
6-3. Tyres/Wheels (#6)			I	I	I	I	I	I
*6-4. Wheel bearings (#7)			–	I	–	I	–	I
*6-5. Drive axle boots (#8)			–	–	I	–	–	I
*6-6. Suspension system (#9)			–	I	–	I	–	I
*6-7. Steering system (#10)			–	I	–	I	–	I
*6-8. Manual transmission oil	Genuine “SUZUKI GEAR OIL 75W”		–	I	–	I	–	I
	Other than “SUZUKI GEAR OIL 75W”	(I: 1st 15000 km only)	–	–	R	–	–	R
6-9. Continuously Variable Transmission (CVT)		Fluid level	–	I	–	I	–	I
6-10. All latches, hinges and locks			–	I	–	I	–	I
*6-11. Air conditioner filter element			–	I	R	–	I	R

#5: Clutch fluid is supplied from brake fluid reservoir.
#6: Tyres/Wheels (including tyre rotation) for Mexico models :Inspect every 10000 km (6000 miles) or 12 months.
#7: Wheel bearings for Mexico models :Inspect every 10000 km (6000 miles) or 12 months.
#8: Drive axle boots for Mexico models :Inspect every 10000 km (6000 miles) or 12 months.
#9: Suspension system for Mexico models :Inspect every 10000 km (6000 miles) or 12 months.
#10:Steering system for Mexico models :Inspect every 10000 km (6000 miles) or 12 months.

Maintenance recommended under severe driving conditions (except for European countries and Israel)

Follow this schedule if your vehicle is mainly operated under one or more of the following conditions:
- When most trips are less than 6 km (4 miles).
- When most trips are less than 16 km (10 miles) and outside temperature remains below freezing.
- Idling and/or low-speed operation in stop-and-go traffic.
- Operating in extremely cold weather and/or on salted roads.
- Operating in rough and/or muddy areas.
- Operating in dusty areas.
- Repeated high speed drive or high engine revolutions.
- Towing a trailer, if admitted.

Schedule should also be followed if the vehicle is used for delivery service, police, taxi or other commercial applications.

Interval: This interval should be judged by odometer reading or months, whichever comes first.		km (x1000)	7.5	15	22.5	30	37.5	45
		miles (x1000)	4.5	9	13.5	18	22.5	27
		months	6	12	18	24	30	36
ENGINE								
*1-1. Engine accessory drive belt	Tension check, *Replacement		I	I	I	I	R	I
1-2. Engine oil and engine oil filter	[Vehicle without oil change request light (#1,2)]		R	R	R	R	R	R
	[Vehicle with oil change request light (#1, 3)] ACEA Standards or SUZUKI GENUINE OIL (#2)		Replace every 10000 km (6000 miles) or 6 months. Refer to “Oil change request light (if equipped)” (P.4-55) or “Setting mode of information display” (P.12-8).					
	[Vehicle with oil change request light (#1, 3, 4)] Other than ACEA Standards or SUZUKI GENUINE OIL (#2)		R	R	R	R	R	R
			Refer to “Oil change request light (if equipped)” (P.4-55) or “Setting mode of information display” (P.12-8).					
1-3. Engine coolant	SUZUKI LLC: Super (Blue) (#5)	First time only:	Replace at 150000 km (90000 miles) or 96 months.					
		Second time and after:	Replace every 75000 km (45000 miles) or 48 months.					
	SUZUKI LLC: Standard (Green)		–	–	–	–	–	R
*1-4. Exhaust system (except catalyst)			–	–	–	I	–	–
IGNITION								
2-1. Spark plugs	Iridium plug		–	–	–	R	–	–
FUEL								
3-1. Air cleaner filter element*1			Inspect every 2500 km (1500 miles).					
			Replace every 30000 km (18000 miles) or 24 months.					
*3-2. Fuel lines			–	–	–	I	–	–
*3-3. Fuel filter			Replace every 105000 km (63000 miles).					
*3-4. Fuel tank			–	–	–	–	–	I
EMISSION CONTROL SYSTEM								
*4-1. PCV valve			–	–	–	–	–	–
*4-2. Fuel evaporative emission control system			–	–	–	–	–	–

#1: Vehicle with oil change request light has the oil life monitoring system and related oil change request light in the instrument cluster. For further details, see “Oil change request light (if equipped)” or “Setting mode of information display” in the “SPECIFICATIONS” section.
#2: For further details, see “Engine oil and filter” in this section.
#3: In severe driving conditions, you need to change the oil change request light setting. For further details, see “Oil change request light” in the “INSTRUMENT CLUSTER” section.
#4: If you replace ACEA Standards or SUZUKI genuine engine oil by the engine oil other than ACEA Standards or SUZUKI genuine engine oil, you need to change the oil change request light setting. For further details, see “Oil change request light” in the “INSTRUMENT CLUSTER” section.
#5: Perform the engine coolant level check under the daily inspection in the “OPERATING YOUR VEHICLE” section.
If you use the engine coolant other than “SUZUKI LLC: Super (Blue)” for replacement, follow the schedule of “SUZUKI LLC: Standard (Green)”. (Replace every 45000 km (27000 miles) or 36 months.)
*1 Inspect more frequently if the vehicle is used under dusty conditions.

Interval: This interval should be judged by odometer reading or months, whichever comes first.		km (x1000)	52.5	60	67.5	75	82.5	90
		miles (x1000)	31.5	36	40.5	45	49.5	54
		months	42	48	54	60	66	72
ENGINE								
*1-1. Engine accessory drive belt	Tension check, *Replacement		I	I	I	R	I	I
1-2. Engine oil and engine oil filter	[Vehicle without oil change request light (#1,2)]		R	R	R	R	R	R
	[Vehicle with oil change request light (#1, 3)] ACEA Standards or SUZUKI GENUINE OIL (#2)		Replace every 10000 km (6000 miles) or 6 months. Refer to “Oil change request light (if equipped)” (P.4-55) or “Setting mode of information display” (P.12-8).					
	[Vehicle with oil change request light (#1, 3, 4)] Other than ACEA Standards or SUZUKI GENUINE OIL (#2)		R	R	R	R	R	R
			Refer to “Oil change request light (if equipped)” (P.4-55) or “Setting mode of information display” (P.12-8).					
1-3. Engine coolant	SUZUKI LLC: Super (Blue) (#1)	First time only:	Replace at 150000 km (90000 miles) or 96 months.					
		Second time and after:	Replace every 75000 km (45000 miles) or 48 months.					
	SUZUKI LLC: Standard (Green)		–	–	–	–	–	R
*1-4. Exhaust system (except catalyst)			–	I	–	–	–	I
IGNITION								
2-1. Spark plugs	Iridium plug		–	R	–	–	–	R
FUEL								
3-1. Air cleaner filter element*1			Inspect every 2500 km (1500 miles).					
			Replace every 30000 km (18000 miles) or 24 months.					
*3-2. Fuel lines			–	I	–	–	–	I
*3-3. Fuel filter			Replace every 105000 km (63000 miles).					
*3-4. Fuel tank			–	–	–	–	–	I
EMISSION CONTROL SYSTEM								
*4-1. PCV valve			–	–	–	–	–	I
*4-2. Fuel evaporative emission control system			–	–	–	–	–	I

#1: Vehicle with oil change request light has the oil life monitoring system and related oil change request light in the instrument cluster. For further details, see “Oil change request light (if equipped)” or “Setting mode of information display” in the “SPECIFICATIONS” section.
#2: For further details, see “Engine oil and filter” in this section.
#3: In severe driving conditions, you need to change the oil change request light setting. For further details, see “Oil change request light” in the “INSTRUMENT CLUSTER” section.
#4: If you replace ACEA Standards or SUZUKI genuine engine oil by the engine oil other than ACEA Standards or SUZUKI genuine engine oil, you need to change the oil change request light setting. For further details, see “Oil change request light” in the “INSTRUMENT CLUSTER” section.
#5: Perform the engine coolant level check under the daily inspection in the “OPERATING YOUR VEHICLE” section.
If you use the engine coolant other than “SUZUKI LLC: Super (Blue)” for replacement, follow the schedule of “SUZUKI LLC: Standard (Green)”. (Replace every 45000 km (27000 miles) or 36 months.)
*1 Inspect more frequently if the vehicle is used under dusty conditions.

Interval: This interval should be judged by odometer reading or months, whichever comes first.		km (x1000)	7.5	15	22.5	30	37.5	45
		miles (x1000)	4.5	9	13.5	18	22.5	27
		months	6	12	18	24	30	36
BRAKE								
*5-1. Brake discs and pads	(front)		–	I	–	I	–	I
Brake drums and shoes	(rear)		–	–	–	I	–	–
*5-2. Brake hoses and pipes			–	–	–	I	–	–
5-3. Brake pedal			–	I	–	I	–	I
*5-4. Brake fluid (#6)			–	I	–	R	–	I
5-5. Parking brake lever and cable		Check, *Adjustment (1st 15000 km only)	–	I	–	–	–	–
CHASSIS AND BODY								
*6-1. Clutch pedal			–	I	–	I	–	I
*6-2. Clutch fluid (#6)			–	I	–	R	–	I
6-3. Tyres/Wheels (#7)			–	I	–	I	–	I
*6-4. Wheel bearings (#8)			–	I	–	I	–	I
*6-5. Drive axle boots (#9)			–	I	–	I	–	I
*6-6. Suspension system (#10)			–	–	–	I	–	–
*6-7. Steering system (#11)			–	–	–	I	–	–
*6-8. Manual transmission oil	Genuine “SUZUKI GEAR OIL 75W”		–	–	–	I	–	–
			Replace every 60000 km (36000 miles) or 48 months.					
	Other than “SUZUKI GEAR OIL 75W”		–	–	–	R	–	–
6-9. Continuously Variable Transmission (CVT)		Fluid level	–	–	–	I	–	–
		*Fluid deterioration check*2	–	–	–	I	–	–
		*Fluid change	Replace every 75000 km (45000 miles).					
6-10. All latches, hinges and locks			–	–	–	I	–	–
*6-11. Air conditioner filter element*3			–	I	–	I	–	R

#6: Clutch fluid is supplied from brake fluid reservoir.
#7: Tyres/Wheels (including tyre rotation) for Mexico models :Inspect every 5000 km (3000 miles) or 6 months.
#8: Wheel bearings for Mexico models :Inspect every 5000 km (3000 miles) or 6 months.
#9: Drive axle boots for Mexico models :Inspect every 5000 km (3000 miles) or 6 months.
#10:Suspension system for Mexico models :Inspect every 5000 km (3000 miles) or 6 months.
#11:Steering system for Mexico models :Inspect every 5000 km (3000 miles) or 6 months.

⚠ WARNING

The shock absorbers are filled with high pressure gas. Never attempt to disassemble them or throw them into a fire. Avoid storing them near a heater or heating device. When scrapping the absorber, the gas must be released from the absorber safely. Ask an authorized SUZUKI dealer or a qualified workshop for assistance.

Interval: This interval should be judged by odometer reading or months, whichever comes first.		km (x1000)	52.5	60	67.5	75	82.5	90
		miles (x1000)	31.5	36	40.5	45	49.5	54
		months	42	48	54	60	66	72
BRAKE								
*5-1. Brake discs and pads	(front)		–	I	–	I	–	I
Brake drums and shoes	(rear)		–	I	–	–	–	I
*5-2. Brake hoses and pipes			–	I	–	–	–	I
5-3. Brake pedal			–	I	–	I	–	I
*5-4. Brake fluid (#6)			–	R	–	I	–	R
5-5. Parking brake lever and cable		Check, *Adjustment (1st 15000 km only)	–	–	–	–	–	–
CHASSIS AND BODY								
*6-1. Clutch pedal			–	I	–	I	–	I
*6-2. Clutch fluid (#6)			–	R	–	I	–	R
6-3. Tyres/Wheels (#7)			–	I	–	I	–	I
*6-4. Wheel bearings (#8)			–	I	–	I	–	I
*6-5. Drive axle boots (#9)			–	I	–	I	–	I
*6-6. Suspension system (#10)			–	I	–	–	–	I
*6-7. Steering system (#11)			–	I	–	–	–	I
*6-8. Manual transmission oil	Genuine “SUZUKI GEAR OIL 75W”		–	R	–	–	–	I
			Replace every 60000 km (36000 miles) or 48 months.					
	Other than “SUZUKI GEAR OIL 75W”		–	R	–	–	–	R
6-9. Continuously Variable Transmission (CVT)		Fluid level	–	I	–	–	–	I
		*Fluid deterioration check*2	–	I	–	–	–	I
		*Fluid change	Replace every 75000 km (45000 miles).					
6-10. All latches, hinges and locks			–	I	–	–	–	I
*6-11. Air conditioner filter element*3			–	I	–	I	–	R

#6: Clutch fluid is supplied from brake fluid reservoir.
#7: Tyres/Wheels (including tyre rotation) for Mexico models :Inspect every 5000 km (3000 miles) or 6 months.
#8: Wheel bearings for Mexico models :Inspect every 5000 km (3000 miles) or 6 months.
#9: Drive axle boots for Mexico models :Inspect every 5000 km (3000 miles) or 6 months.
#10:Suspension system for Mexico models :Inspect every 5000 km (3000 miles) or 6 months.
#11:Steering system for Mexico models :Inspect every 5000 km (3000 miles) or 6 months.

NOTE:
This table shows the service schedule up to 90000 km (54000 miles).
Beyond 90000 km (54000 miles), perform the same services at the same intervals shown in the chart.

*2 Check or replace as necessary if you usually drive with high speed or high engine revolutions.
*3 Clean more frequently if the air flow from the air conditioner decreases.

Drive belt

⚠ WARNING

When the engine is running, keep hands, hair, clothing, tools, etc. away from the moving fan and drive belts.

The drive belts tension is adjusted automatically. If the belt is too loose, insufficient battery charging, engine overheating, poor power steering, poor air conditioning, or excessive belt wear can result.

The belts should also be examined to ensure that they are not damaged.

If you need to replace or adjust the belt have it done by your authorized SUZUKI dealer or a qualified workshop.

Engine oil and filter

Specified oil

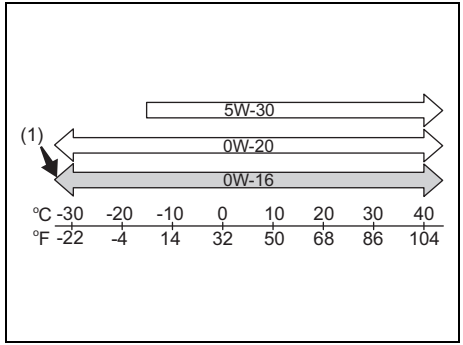

52RS004

(1) Preferred

Check that the engine oil you use comes under the quality classification as listed below:
- ACEA* A3/B4, A5/B5
- API SL, SM, SN, SP
- ILSAC GF-6

* For European countries and Israel

Select the appropriate oil viscosity according to the above chart.

SAE 0W-16 (1) is the best choice for good fuel economy and good startability in cold weather.

NOTE:
- *The replacement timing varies with the type of engine oil that you choose. Refer to “Maintenance schedule” (P.9-2) for corresponding maintenance schedule.*

(For European countries and Israel)
- *SUZUKI highly recommends the use of ECSTAR brand engine oil. ECSTAR has been specially formulated for your SUZUKI product and contributes to the desired vehicle performance and ideal driving experience.*

(Except for European countries and Israel)
- *We recommend that you use SUZUKI genuine oil. To purchase it, see an authorized SUZUKI dealer or a qualified workshop .*

Oil level check

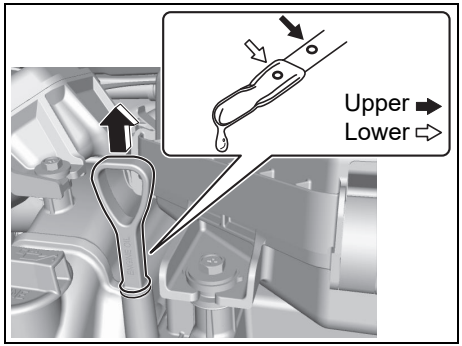

69T090010

It is important to keep the engine oil at the correct level for proper lubrication of your vehicle's engine. Check the oil level with the vehicle on a level surface. The oil level indication may be inaccurate if the vehicle is on a slope. The oil level should be checked either before starting the engine or at least 5 minutes after stopping the engine.

Pull out the oil dipstick, wipe the oil off with a clean cloth, insert the dipstick all the way into the engine, and then remove it again. The oil on the stick should be between the upper and lower limits shown on the stick. If the oil level indication is near the lower limit, add enough oil to raise the level to the upper limit.

NOTICE

Failure to check the oil level regularly could lead to serious engine trouble due to insufficient oil.

Refilling

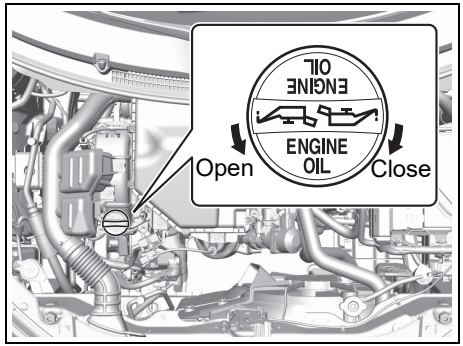

69T090390

Remove the oil filler cap and pour oil slowly through the filler hole to bring the oil level to the upper limit on the dipstick. Be careful not to overfill the oil. Too much oil is almost as bad as too little oil. After refilling, start the engine and allow it to idle for about a minute. Stop the engine, wait about 5 minutes and check the oil level again.

Changing engine oil and oil filter

Since special procedures are required, ask an authorized SUZUKI dealer or a qualified workshop for this job.

Engine coolant

Selection of coolant

NOTICE

SUZUKI LLC: Super (Blue) coolant; This coolant is already diluted to the proper percentage. Do not dilute with distilled water additionally. Doing so may result in the possibility of freezing and/or overheating coolant.

To maintain optimum performance and durability of your engine, use SUZUKI genuine coolant or equivalent.

NOTE:
If you use the engine coolant other than the SUZUKI LLC: Super (Blue) for replacement, follow the schedule of SUZUKI LLC: Standard (Green). To see the detail of the maintenance schedule, refer to "Periodic maintenance schedule" (P.9-3) or (P.9-13).

This type of coolant is the best for cooling system for the following reasons:
- The coolant helps maintain proper engine temperature.
- It gives proper protection against freezing and boiling.
- It gives proper protection against corrosion and rust.

Failure to use the proper coolant can damage your cooling system. An authorized SUZUKI dealer can help you select the proper coolant.

NOTICE

To avoid damaging your cooling system:
- **Always use a high quality ethylene glycol base non-silicate type coolant diluted with distilled water at the correct mixture concentration.**
- **Check that the proper mix is 50/50 coolant to distilled water and in no case higher than 70/30. Concentrations greater than 70/30 coolant to distilled water will cause overheating conditions.**
- **Do not use straight coolant nor plain water (except "SUZUKI LLC: Super (Blue)").**
- **Do not add extra inhibitors or additives. They may not be compatible with your cooling system.**
- **Do not mix different types of base coolants. Doing so may result in accelerated seal wear and/or the possibility of severe overheating and extensive engine/CVT damage.**

NOTE:
SUZUKI highly recommends the use of ECSTAR brand coolant. ECSTAR has been specially formulated for your SUZUKI product and contributes to the desired vehicle performance and ideal driving experience.

Coolant level check

⚠ WARNING

Swallowing engine coolant can cause severe injury or death. Inhaling coolant mist or vapors or getting coolant in your eyes could result in severe injury.
- **Do not drink antifreeze or coolant solution. If swallowed, do not induce vomiting. Immediately contact a poison control center or a physician.**
- **Avoid inhaling coolant mist or hot vapors. If inhaled, remove to a fresh air area.**
- **If coolant gets in the eyes, flush with water and seek medical attention.**
- **Wash thoroughly after handling coolant.**
- **Keep engine coolant out of the reach of children and pets.**

NOTICE

- **SUZUKI LLC: Super (Blue) coolant; This coolant is already diluted to the proper percentage. Do not dilute with distilled water additionally. Doing so may result in the possibility of freezing and/or overheating coolant.**
- **SUZUKI LLC: Standard (Green) coolant;**
  - **The mixture you use should contain 50% concentration of anti-freeze.**
  - **If the lowest ambient temperature in your area is expected to be –35°C (–31°F) or below, use higher concentrations up to 60% following the instructions on the anti-freeze container.**

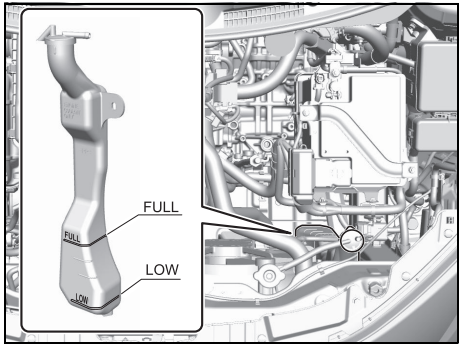

69T090020

Check the coolant level at the reservoir tank, not at the radiator. With the engine cool, the coolant level should be between “FULL” and “LOW” marks.
If the coolant level is below “LOW” mark, coolant should be added. While the engine is cool, remove the reservoir tank cap and add coolant until the reservoir tank level reaches “FULL” mark. Never fill the reservoir tank above “FULL” mark.

NOTICE

When putting the cap on the reservoir tank, line up the mark on the cap and the mark on the tank. Failure to follow this can result in coolant leakage.

Coolant replacement

Since special procedures are required, ask an authorized SUZUKI dealer or a qualified workshop for this job.

Air cleaner

If the air cleaner is clogged with dust, there will be greater intake resistance, resulting in decreased power output and increased fuel consumption.

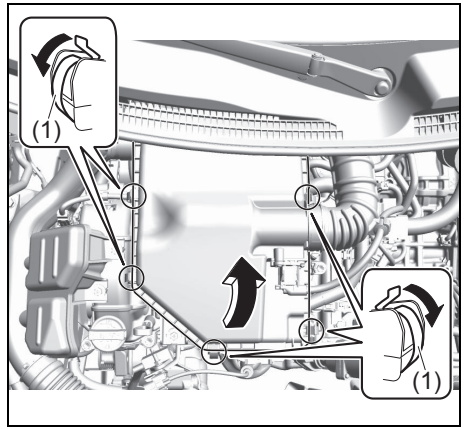

69T090030

1) Unclamp the clamps (1).
2) Hold up the air cleaner upper case.
3) Remove the element from the air cleaner case. If it appears to be dirty, clean or replace it with a new one.
4) Reinstall the air cleaner case securely.

Spark plugs

Spark plug replacement and inspection

Since special procedures, materials and tools are required, it is recommended that you trust this job to an authorized SUZUKI dealer or a qualified workshop.

Gear oil

Manual transmission oil / transfer oil (4WD) / rear differential oil (4WD)

When adding gear oil, use gear oil with the appropriate viscosity and grade as shown in the chart below.

We highly recommend you use “SUZUKI GEAR OIL 75W” for manual transmission oil.

Manual transmission oil

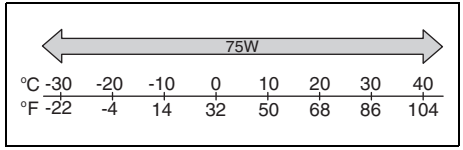

54P120706

We highly recommend you use “SUZUKI GEAR OIL 75W-85” for transfer oil (4WD) and rear differential oil (4WD).

Transfer oil (4WD)
Rear differential oil (4WD)

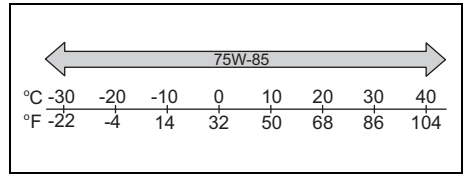

71LMT0701

Gear oil level check / Gear oil change

Since special procedures, materials and tools are required, ask an authorized SUZUKI dealer or a qualified workshop for this job.

Clutch

Clutch pedal

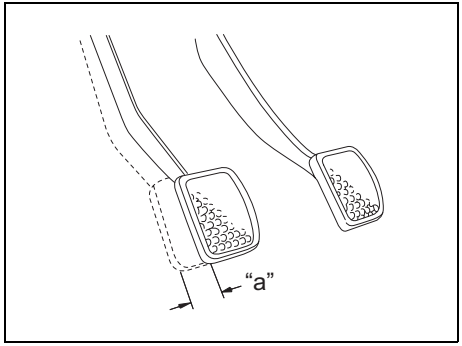

69T090450

Clutch pedal play "a":
MAX 10 mm (0.4 in.)

Measure the clutch pedal play by moving the clutch pedal with your hand and measuring the distance it moves until you feel slight resistance. The play in the clutch pedal should be less than the specified values. If the play is more than the above, or clutch dragging is felt with the pedal fully depressed, have the clutch inspected by an authorized SUZUKI dealer or a qualified workshop.

Clutch fluid

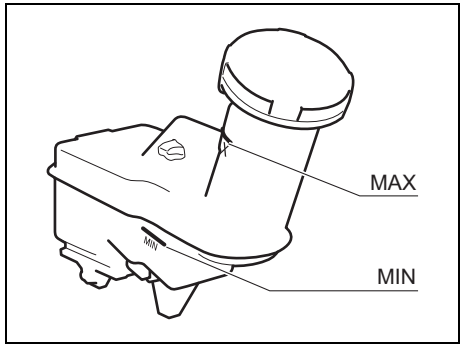

52RM70020

Check the clutch pedal for smooth operation and clutch fluid level from time to time. If clutch dragging is felt with the pedal fully depressed, have the clutch inspected by an authorized SUZUKI dealer or a qualified workshop. If the clutch fluid level is near "MIN" line, fill it up to "MAX" line with DOT3 or SAE J1703 brake fluid.

NOTICE

Clutch fluid is supplied from brake fluid reservoir. If your clutch fluid level is increased or near the "MIN" line, there is a possibility of clutch or brake fluid leakage or abnormal wear of clutch.
Have your vehicle inspected immediately by an authorized SUZUKI dealer or a qualified workshop.

Continuously Variable Transmission (CVT) fluid

Specified fluid

Use a CVT fluid SUZUKI CVTF 4401.

Fluid level check

NOTICE

Driving with too much or too little fluid can damage the transmission.

You must check the fluid level with the CVT fluid at normal operating temperature.

To check the fluid level:
1) To warm up the CVT fluid, drive the vehicle for more than 5 km (3 miles).
2) Then drive for ten more minutes.

NOTICE

Be sure to use the specified CVT fluid. Using CVT fluid other than SUZUKI CVTF 4401 may damage the CVT of your vehicle.

NOTE:
Do not check the fluid level if you have just driven the vehicle for a long time at high speed, or if you have driven in city traffic in hot weather. Wait until the fluid cools down (about 30 minutes), or the fluid level indication will not be correct.

3) Park your vehicle on level ground.
4) Apply the parking brake and then start the engine in “P” (Park). Let it idle for two minutes and keep it running during the fluid level check.
5) With your foot on the brake pedal, move the gearshift lever through each gear position, pausing for about three seconds in each position. Then move it back to “P” (Park) position.

⚠ WARNING

Be sure to depress the brake pedal when moving the gearshift lever, or the vehicle can move suddenly.

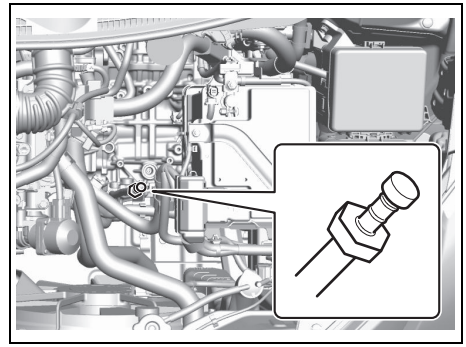

69T090040

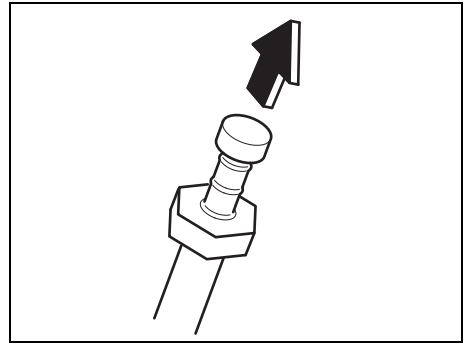

69T090050

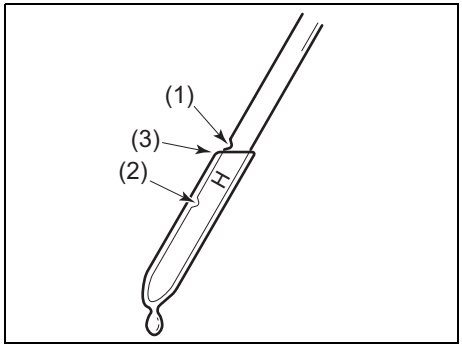

69T090060

(1) FULL HOT
(2) LOW HOT
(3) The lowest point = Fluid level

6) The handle of the CVT fluid dipstick is colored orange for easy identification. Remove the dipstick, wipe the oil off with a clean cloth and push it back in until the cap seats. Then pull out the dipstick.
7) Check both sides of the dipstick, and read the lowest level. The fluid level should be between the two marks in “H” (hot) range on the dipstick.

NOTICE
After checking or adding oil, be sure to insert the dipstick securely.

Deterioration checking / Changing oil

Since special procedures, materials and tools are required to check the deterioration of CVT oil or change, ask an authorized SUZUKI dealer or a qualified workshop for this job.

Brakes

Brake fluid

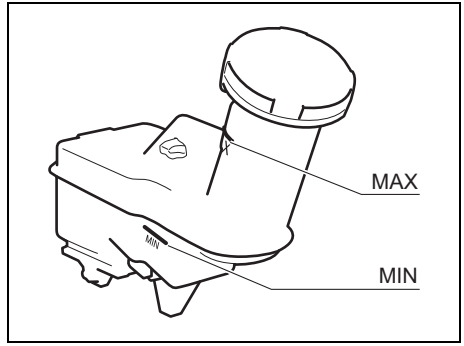

52RM70020

Check the brake fluid level by looking at the reservoir in the engine compartment. Check that the fluid level is between “MAX” and “MIN” lines.

⚠ WARNING

- **Failure to follow the guidelines below can result in personal injury or serious trouble in the brake system.**
  - **If the brake fluid in the reservoir drops below a certain level, the brake warning light on the instrument cluster will come on (the engine must be running with the parking brake fully disengaged). Should the light come on, immediately ask an authorized SUZUKI dealer or qualified workshop to inspect the brake system.**
  - **A rapid fluid loss indicates leakage in the brake system. In this case, immediately ask an authorized SUZUKI dealer or a qualified workshop to inspect the brake system.**
  - **Do not use any fluid other than DOT3 or SAE J1703 brake fluid. Do not use reclaimed fluid or fluid that has been stored in old or open containers. It is essential that foreign particles and other liquids are kept out of the brake fluid reservoir.**

(Continued)

⚠ WARNING

(Continued)

- **Brake fluid is harmful or fatal if swallowed, and harmful if it comes in contact with skin or eyes. If swallowed, do not induce vomiting. Immediately contact a poison control center or a physician. If brake fluid gets in eyes, flush eyes with water and seek medical attention. Wash thoroughly after handling. Solution can be poisonous to animals. Keep out of reach of children and animals.**

NOTICE

- **If your brake fluid level is near the "MIN" line, there is a possibility of brake pad and/or shoe wear and brake fluid leakage. In this case, ask an authorized SUZUKI dealer or a qualified workshop to inspect the brake system.**
- **Brake fluid can damage painted surfaces. Be careful when refilling the reservoir.**

NOTE:

- *The fluid level can be expected to gradually fall as the brake pad and/or shoe wear.*
- *Brake fluid absorbs water over time and brake fluid with high water content may cause vapor lock or brake system malfunction.*
  Replace the brake fluid according to the maintenance schedule in this owner's manual.
- *SUZUKI highly recommends the use of ECSTAR brand brake fluid. ECSTAR has been specially formulated for your SUZUKI product and contributes to the desired vehicle performance and ideal driving experience.*

Brake pedal

Check brake pedal stroke. If the stroke is so large, have the brake system inspected by an authorized SUZUKI dealer or a qualified workshop. If you doubt the brake pedal is at its normal height, check it as follows:

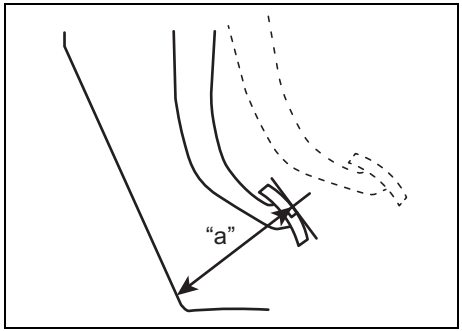

59RN09400

Minimum distance between brake pedal and floor carpet "a"

LHD	MT	68 mm (2.7 in.)
	CVT	59 mm (2.3 in.)
RHD		53 mm (2.1 in.)

With the engine running, measure the distance between the brake pedal and floor carpet when the pedal is depressed with approximately 30 kg (66 lbs) of force. The minimum distance required is as specified. Since your vehicle's brake system is self-adjusting, there is no need for pedal adjustment.
If the pedal to floor carpet distance as measured above is less than the minimum distance required, have your vehicle inspected by an authorized SUZUKI dealer or a qualified workshop.

NOTE:
- *When measuring the distance between the brake pedal and floor wall, be sure not to include the floor mat or rubber on the floor carpet in your measurement.*
- *Measure the distance at the brake pedal's side facing toward the driver's door.*

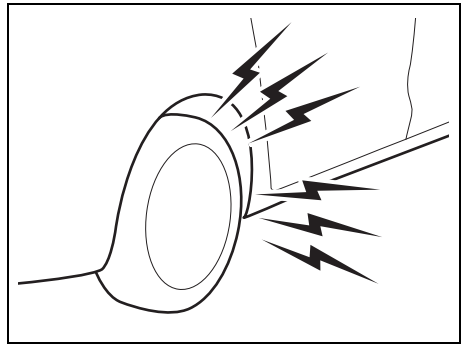

52RM70500

⚠ WARNING

If the brake pad lining becomes worn and it has reached its minimum thickness, squealing noise sounds during braking.
If you hear this noise, have the vehicle inspected immediately by an authorized SUZUKI dealer or a qualified workshop.
Continued driving with this condition can cause an accident.

⚠ CAUTION

If you experience any of the following problems with your vehicle's brake system, have the vehicle inspected immediately by an authorized SUZUKI dealer or a qualified workshop.
- **Poor braking performance**
- **Uneven braking (brakes not working uniformly on all wheels)**
- **Excessive pedal travel**
- **Brake dragging**

Parking brake

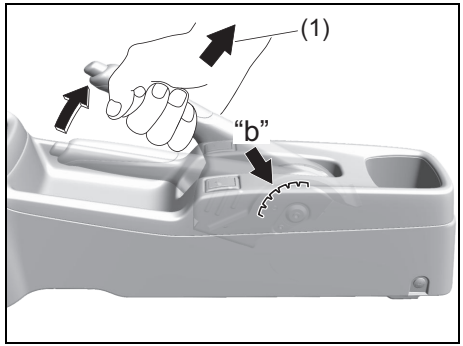

69T090070

Ratchet tooth specification "b":
4th – 9th
Lever pull force (1):
200 N (20 kg, 45 lbs)

Check the parking brake for proper adjustment by counting the number of clicks made by the ratchet teeth as you slowly pull up on the parking brake lever to the point of full engagement. The parking brake lever should stop between the specified ratchet teeth and the rear wheels should be securely locked. If the parking brake is not properly adjusted or the brakes drag is suspected even after the lever has been fully released, have the parking brake inspected and/or adjusted by an authorized SUZUKI dealer or a qualified workshop.

Brake discs and brake drums

Brake disc

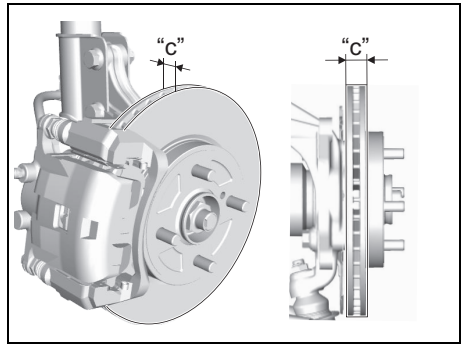

69T090080

Brake location	Minimum thickness "c"
Front wheels	18.0 mm (0.7 in.)

Brake drum

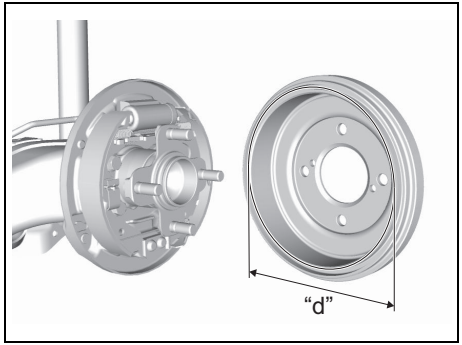

69T090090

Brake location	Maximum inner diameter "d"	
Rear wheels	2WD	181 mm (7.13 in.)
	4WD	222 mm (8.74 in.)

If the measured thickness or inner diameter of the most worn part falls below or exceeds the value indicated above, the parts should be replaced with a new one. The measurement involves disassembling each brake and requires the use of a micrometer or caliper, which must be done according to the instructions described in the relevant service manual or available from the relevant repair information site.

Steering wheel

Check that the steering wheel turns easily and smoothly without rattling by turning it all the way to the right and to the left while driving very slowly in an open area. If you find anything else to be wrong, an inspection must be performed by an authorized SUZUKI dealer or a qualified workshop.

Tyres

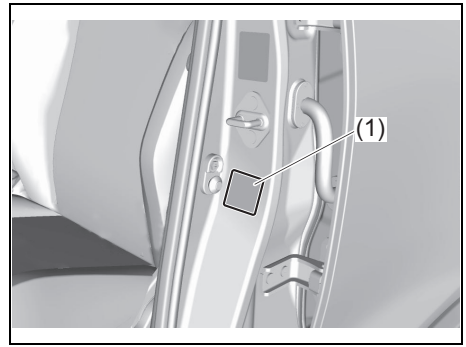

69T090100

The front and rear tyre pressure specifications are listed in the tyre information label (1). Both front and rear tyres should have the specified tyre pressure.

NOTE:
The tyre inflation pressure will change due to changes in atmospheric pressure, temperature or tyre temperature when driving. To reduce the chance that the low tyre pressure warning light will come on due to normal changes in temperature and atmospheric pressure, it is important to check and adjust the tyre pressures when the tyres are cold. If you check tyres after driving, they are warm. Even if the tyre pressure seems to be good in this condition, it could fall below the specified pressure

when tyres cool down. Also, tyres that are inflated to the specified pressure in a warm garage may have pressure below the specification when the vehicle is driven outside in very cold temperature. If you adjust the tyre pressure in a garage that is warmer than the outside temperature, you should add 1 kPa to the recommended cold tyre inflation pressure for every 0.8°C difference between garage temperature and outside temperature.

Tyre inspection

Inspect your vehicle's tyres at least once a month or before long trip by performing the following checks:

1) Measure the air pressure with a tyre gauge. Adjust the pressure if necessary. Remember to check the spare tyre, too.

⚠ WARNING

- **Air pressures should be checked when the tyres are cold or you may get inaccurate readings.**
- **Check the inflation pressure from time to time while inflating the tyre gradually, until the specified pressure is obtained.**
- **Never under-inflate or over-inflate the tyres.**
  Under-inflation can cause unusual handling characteristics or can cause the rim to slip on the tyre bead, resulting in an accident or damage to the tyre or rim.
  Over-inflation can cause the tyre to burst, resulting in personal injury. Over-inflation can also cause unusual handling characteristics which may result in an accident.

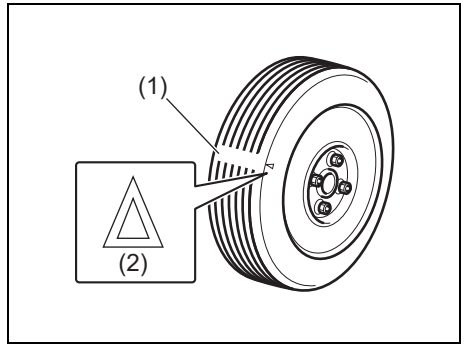

69T090110

(1) Tread wear indicator
(2) Indicator location mark

2) Check that the depth of the tread groove is more than 1.6 mm (0.06 in.). To help you check this, the tyres have molded-in tread wear indicators in the grooves. When the indicators appear on the tread surface, the remaining depth of the tread is 1.6 mm (0.06 in.) or less and the tyre should be replaced.
3) Check for abnormal wear, cracks and damage. Any tyres with cracks or other damage should be replaced. If any tyres show abnormal wear, have them inspected by an authorized SUZUKI dealer or a qualified workshop.

⚠ CAUTION

Hitting curbs and running over rocks can damage tyres and affect wheel alignment. Have tyres and wheel alignment checked periodically by an authorized SUZUKI dealer or a qualified workshop.

4) Check for loose wheel nuts.
5) Check that there are no nails, stones or other objects sticking into the tyres.

⚠ WARNING

- **Your SUZUKI vehicle is equipped with tyres which are all the same type and size. This is important to ensure proper steering and handling of the vehicle. Never mix tyres of different size or type on the four wheels of your vehicle. The size and type of tyres used should be only those approved by SUZUKI as standard or optional equipment for your vehicle.**
- **Replacing the wheels and tyres equipped on your vehicle with certain combinations of aftermarket wheels and tyres can significantly change the steering and handling characteristics of your vehicle.**
- **Therefore, use only those wheel and tyre combinations approved by SUZUKI as standard or optional equipment for your vehicle.**

NOTICE

Replacing the original tyres with tyres of a different size may result in false speedometer or odometer readings. Check with an authorized SUZUKI dealer or a qualified workshop before purchasing replacement tyres that differ in size from the original tyres.

NOTICE

For 4WD model, replacing a tyre with one of a different size, or using different brands among the four tyres can result in damage to the drive train.

Tyre rotation

4-tyre rotation

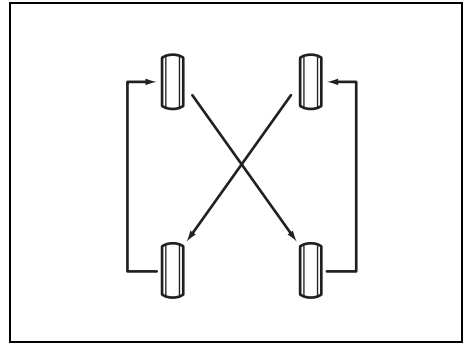

65D459

To avoid uneven wear of your tyres and to prolong their life, rotate the tyres as illustrated. Tyres should be rotated every 10000 km (6000 miles). After rotation, adjust front and rear tyre pressures to the specification listed in your vehicle's tyre information label.

Compact spare tyre (if equipped)

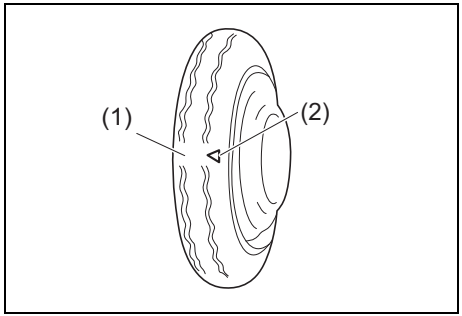

69T090400

(1) Wear indicator
(2) Indicator location mark

Your vehicle comes equipped with a compact spare tyre. It is designed to save space in your storage area, and its lighter weight facilitates installing the spare tyre when getting a flat tyre. It is only intended for temporary emergency use, until the conventional tyre can be repaired or replaced. The inflation pressure of the compact spare tyre should be checked at least once a month. Use a quality pocket-type inflation pressure gauge and set at 420 kPa (60 psi). At the same time, check that the tyre is stored securely. If it is not, tighten it.

Note that two or more compact spare tyres should not be used on one vehicle simultaneously.

⚠ WARNING

- **If your vehicle is used compact spare tyre, press the Dual Sensor Brake Support II (DSBS II) OFF switch and turn off the Dual Sensor Brake Support II (DSBS II). If not, accidents related to the system being turned on may occur.**
- **The compact spare tyre and wheel are intended for temporary emergency use only. Continuous use of this spare can result in tyre failure and loss of control. Always observe these precautions when using this spare:**
  - **Your vehicle should be handled in a different way when using this spare.**
  - **Do not exceed 80 km/h (50 mph).**
  - **Replace this spare with a standard tyre and wheel as soon as possible.**
  - **Use of this spare will reduce ground clearance.**
  - **Recommended air pressure for this spare is 420 kPa (60 psi).**
  - **Do not use tyre chains on the compact spare. If you must use tyre chains, rearrange the wheels so standard tyres and wheels are fitted to the front axle.**

(Continued)

⚠ WARNING

(Continued)

- **The compact spare tyre has a much shorter tread life than the conventional tyres on your vehicle. Replace the tyre as soon as the tread wear indicator appears.**
- **When replacing the compact spare tyre, use a replacement tyre with the exact same size and construction.**
- **Do not use the compact spare tyre on a front wheel. If a front tyre get punctured, replace the front wheel with a rear wheel and install the compact spare tyre in place of the removed rear wheel.**

Battery

⚠ WARNING

- **Batteries produce flammable hydrogen gas. Keep flames and sparks away from the battery or an explosion may occur. Never smoke when working near the battery.**
- **When checking or servicing the battery, disconnect the negative cable. Be careful not to cause a short circuit by allowing metal objects to contact the battery posts and the vehicle at the same time.**
- **To avoid harm to yourself or damage to your vehicle or battery, follow the jump-starting instructions in "EMERGENCY SERVICE" section if it is necessary to jump-start your vehicle.**
- **Diluted sulfuric acid spilled from battery can cause blindness or severe burns. Use proper eye protection and gloves. Flush eyes or body with ample water and get medical care immediately if suffered. Keep batteries out of reach of children.**

NOTICE

If your vehicle is equipped with the ENG A-STOP system and the battery which is exclusive for the ENG A-STOP system is used, only use the specified type of battery for ENG A-STOP system. Refer to "SPECIFICATIONS" (P.12-3). Otherwise, you could damage your vehicle, and the ENG A-STOP system could not be available. If a vehicle battery has to be replaced, consult an authorized SUZUKI dealer. or a qualified workshop

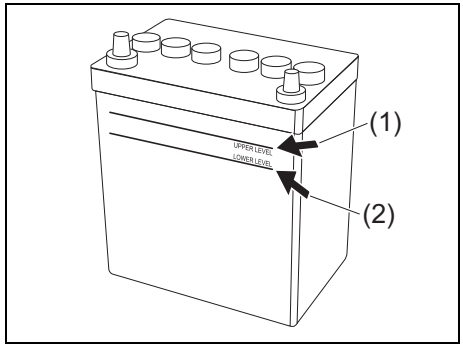

59RN09430

For maintenance-free battery (cap-less type), you need not add water. For traditional type battery, which has water filler caps, the level of the battery solution must be kept between the upper level line (1) and lower level line (2) at all times. If the level is found to be below the lower level line (2), add distilled water to the upper level line (1). You should periodically check the battery, battery terminals, and battery hold-down bracket for corrosion. Remove corrosion using a stiff brush and ammonia mixed with water, or baking soda mixed with water. After removing corrosion, rinse with clean water.

If your vehicle is not going to be driven for a month or longer, disconnect the cable from the negative terminal of the battery to help prevent discharge.

Replacement of the battery

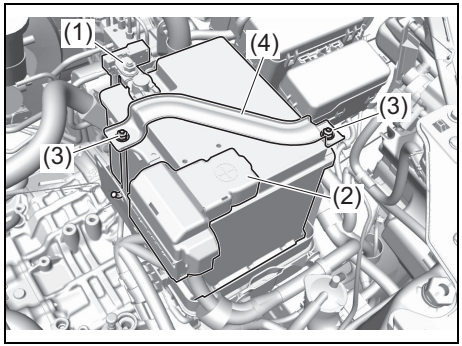

69T090120

To remove the battery:
1) Disconnect the negative cable (1).
2) Disconnect the positive cable (2).
3) Remove the retainer nuts (3) and remove the retainer (4).
4) Remove the battery.

To install the battery:
1) Install the battery in the reverse order of removal.
2) Tighten the bracket bolt and battery cables securely.

NOTE:
- *When the battery is disconnected, some of the vehicle's functions will be initialized and/or deactivated.*
  These functions must be required to reset after the battery is reconnected.
- *Do not disconnect the battery terminals for at least one minute after the engine switch is pressed to change the ignition mode to LOCK (OFF).*

⚠ WARNING

Batteries contain toxic substances including sulfuric acid and lead. They could have potential negative consequences for the environment and human health. Used batteries must be disposed or recycled according to applicable rules or regulations and must not be disposed of with ordinary household trash. Make sure not to tip over the battery when you remove it from the vehicle. Otherwise, sulfuric acid could run out and you might get injury.

NOTICE

- **After stopping the engine, controller and system are operated for a while. Therefore, before removing the battery, wait for more than one minute after changing the ignition mode to LOCK (OFF).**

(Battery label)

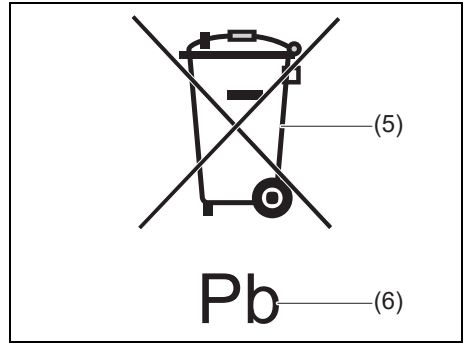

59RN090100

(5) Crossed-out wheeled bin symbol
(6) Chemical symbol of "Pb"

The crossed-out wheeled bin symbol (5) located on the battery label indicates that the used battery should be collected separately from ordinary household trash. The chemical symbol of "Pb" (6) indicates the battery contains more than 0.004% lead.

By ensuring the used battery is disposed of or recycled correctly, you will help prevent potential negative consequences for the environment and human health, which could otherwise be caused by inappropriate trash handling of the battery. The recycling of materials will help to conserve natural resources. For more detailed information about disposing of or recycling the used battery, consult an authorized SUZUKI dealer or a qualified workshop.

Fuses

Your vehicle has three types of fuses, as described below:

Main fuse
The main fuse takes current directly from the lead-acid battery.

Primary fuses
These fuses are between the main fuse and individual fuses, and are for electrical load groups.

Individual fuses
These fuses are for individual electrical circuits.

To remove a fuse, use the fuse puller provided in the fuse box cover.

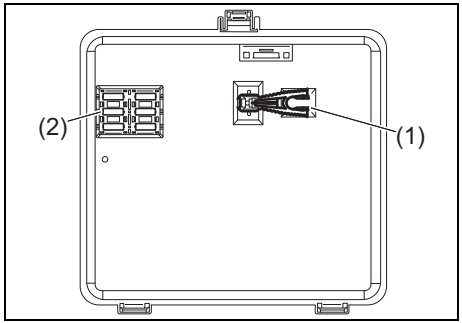

55T090640

(1) Fuse puller
(2) Spare fuse

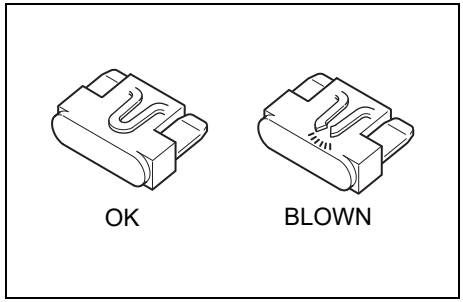

69T090460

⚠ WARNING

- **If the main fuse blows, have your vehicle inspected by an authorized SUZUKI dealer or a qualified workshop.**
- **Always replace a blown fuse with a fuse of the correct amperage and the same size. Never use a substitute such as aluminum foil or wire to replace a blown fuse. Otherwise, wiring may burn out and it may cause a fire.**
- **If you replace a fuse and the new one blows in a short period of time, you may have a major electrical problem. Have your vehicle inspected immediately by a SUZUKI dealer or a qualified workshop.**

Fuses in engine compartment

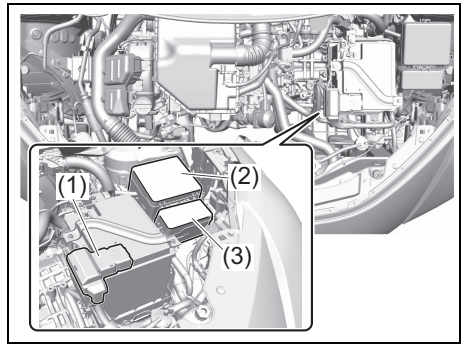

69T090130

(1) Main fuse box
(2) Relay box
(3) Sub relay box

Main fuse box

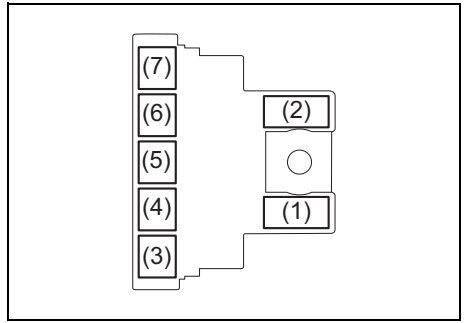

69T090140

Relay box

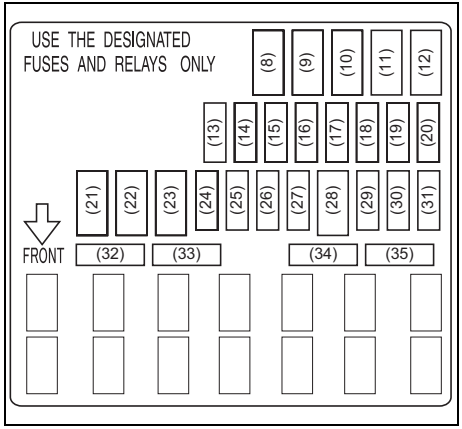

69T090150

Sub relay box

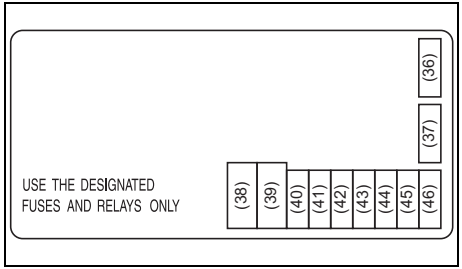

69T090160

MAIN FUSE / PRIMARY FUSE		
(1)	175 A	FL1
(2)	120 A	FL2
(3)	100 A	FL3
(4)	80 A	FL4
(5)	100 A	FL5
(6)	60 A	FL6
(7)	100 A	FL7
(8)	30 A	Starting motor
(9)	40 A	Blower fan
(10)	–	Blank
(11)	40 A	ABS motor
(12)	40 A	Ignition switch
(13)	30 A	B/U
(14)	30 A	Sub battery
(15)	–	Blank
(16)	10 A	DMS
(17)	25 A	ABS control module
(18)	–	Blank
(19)	–	Blank
(20)	–	Blank
(21)	40 A	Radiator fan
(22)	–	Blank
(23)	–	Blank
(24)	–	Blank
(25)	–	Blank
(26)	–	Blank
(27)	10 A	Air compressor
(28)	50 A	Ignition switch 2
(29)	15 A	Transmission*1
(30)	20 A	FI
(31)	–	Blank
(32)	10 A	Radio2
(33)	5 A	Dome light-3
(34)	5 A	Starting Signal
(35)	–	Blank
(36)	15 A	Headlight high (Right)
(37)	15 A	Headlight high (Left)
(38)	30 A	EWP
(39)	–	Blank
(40)	–	Blank
(41)	30 A	DCDC
(42)	15 A	Headlight (Left)
(43)	15 A	Headlight (Right)
(44)	25 A	Headlight high
(45)	–	Blank
(46)	–	Blank

*1: Model with CVT

The main fuse, primary fuses and some of the individual fuses are located in the engine compartment. If the main fuse blows, no electrical component will function. If a primary fuse blows, no electrical component in the corresponding load group will function. When replacing the main fuse, a primary fuse or an individual fuse, use a genuine SUZUKI replacement parts or equivalent for individual fuses.
To remove a fuse, use the fuse puller provided in the fuse box. The amperage of each fuse is shown in the back of the fuse box cover.

Fuses under dashboard

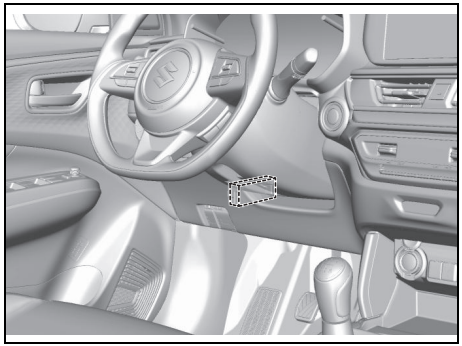

69T090170

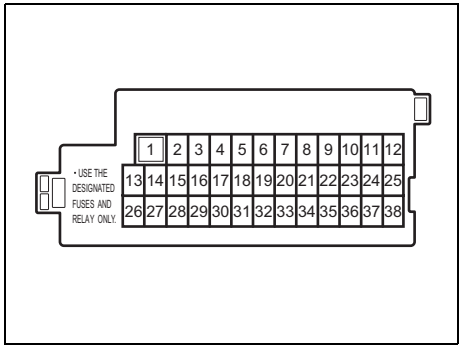

81P70220

PRIMARY FUSE		
(1)	30 A	Power window
(2)	10 A	Meter
(3)	15 A	Ignition coil
(4)	5 A	Ignition-1 signal 2
(5)	20 A	Shift lever
(6)	10 A	CHG
(7)	10 A	Steering lock 2
(8)	20 A	Door lock
(9)	15 A	Steering lock
(10)	10 A	Hazard
(11)	5 A	A-STOP controller
(12)	10 A	Rear fog lamp
(13)	5 A	ABS/ESP® control module
(14)	15 A	Seat heater
(15)	5 A	Ignition-1 signal 3
(16)	10 A	Dome light-2
(17)	5 A	Dome light
(18)	15 A	Radio
(19)	5 A	CONT
(20)	5 A	Key 2
(21)	20 A	Power window timer
(22)	5 A	Key
(23)	15 A	Horn
(24)	5 A	Tail light (Left)
(25)	10 A	Tail light
(26)	10 A	Airbag
(27)	10 A	Ignition-1 signal
(28)	10 A	Back-up light
(29)	5 A	ACC-3
(30)	20 A	Rear defogger
(31)	10 A	Heated mirror
(32)	15 A	ACC-2
(33)	5 A	ACC
(34)	10 A	Rear wiper
(35)	5 A	Ignition-2 signal
(36)	15 A	Washer
(37)	25 A	Front wiper
(38)	10 A	Stop light

Headlight aiming

Since special procedures are required, ask an authorized SUZUKI dealer or a qualified workshop for this job.

Bulb replacement

NOTE:
If it seems to be difficult to perform bulb replacement, consult an authorized Suzuki dealer or a qualified workshop.

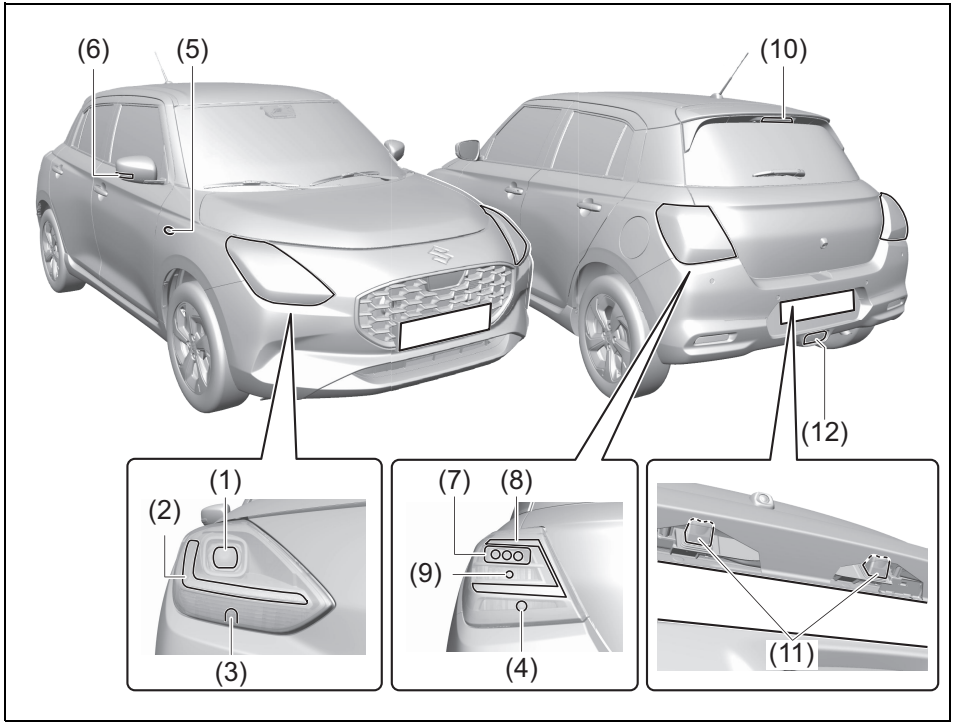

69T090180

No.	ITEM: Lights		WATT-AGE	BULB No.
(1)	Headlight*1		LED	–
(2)	Position light and Daytime Running Light (D.R.L)*1		LED	–
(3)	Turn signal light	Front	12V 21W	WY21W
(4)		Rear	12V 21W	PY21W
(5)	Side turn signal light*1		12V 5W	–
(6)			LED	–
(7)	Brake light*1		LED	–
(8)	Tail light*1		LED	–
(9)	Reversing light		12V 16W	W16W
(10)	High mount stop light*1		LED	–
(11)	License plate light*1		LED	–
(12)	Rear fog light		12V 21W	P21W

If you need to replace the following bulbs indicated in the above table, consult an authorized SUZUKI dealer or a qualified workshop.

*1: Since the lights are non-disassemble type, you cannot replace a bulb. Replace the target assembly if any bulb is defective.

⚠ CAUTION

- **Light bulbs can be hot enough to burn your finger right after turning off lights. Replace the bulbs after they become cool enough.**
- **To avoid injury by sharp-edged parts of the body, wear gloves and a long-sleeved shirt when replacing light bulbs.**

NOTICE

- **The oils from your skin may cause a halogen bulb to overheat and burst when the lights are on. Grasp a new bulb with a clean cloth.**
- **Frequent bulb replacement indicates the need for an inspection of the electrical system. This should be carried out by an authorized SUZUKI dealer or a qualified workshop.**

NOTE:
The inner surface of lens such as the headlights or the rear combination lights may be clouded or dew condensation may occur by driving on a rainy day or washing the vehicle. This is a temporary phenomenon caused by temperature difference between the inside and the outside of the lights. (This is the same phenomenon as the windows are clouded on a rainy day.)
Also, it sometimes seems that water gets into the lights because of waterdrop on the edge of the lens. This is a temporary phenomenon caused by water adherence to the outside of the lights.
The above-mentioned phenomena are not vehicle malfunction.
However, if water is piled up in the lights or large waterdrop adheres to the inner surface of lens, have your vehicle inspected by an authorized SUZUKI dealer or a qualified workshop.

Non-disassembled type lights

Since the lights shown below are non-disassemble type, you cannot replace a bulb. Replace the target assembly if any bulb is defective.
If you need to replace the assembly, ask an authorized SUZUKI dealer. or a qualified workshop

- LED headlight
- Position light and Daytime Running Light (D.R.L)
- Side turn signal light/hazard warning light
- High mount stop light
- Tail/brake light
- License plate light

LED headlights

Since special procedures are required, it is recommended that you take your vehicle to an authorized SUZUKI dealer or a qualified workshop for light replacement.

Front position light and Daytime Running Light (D.R.L)

Since special procedures are required, it is recommended that you take your vehicle to an authorized SUZUKI dealer or a qualified workshop for light replacement.

Front turn signal light

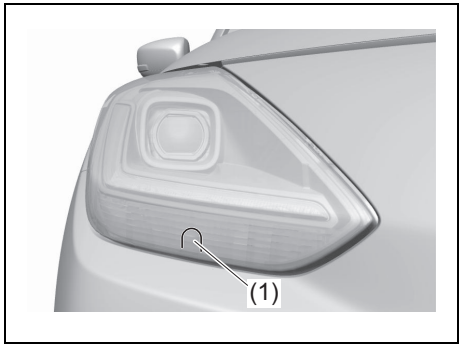

69T090190

(1) Front turn signal light

1) Start the engine. Turn the steering wheel to the opposite side of the front turn signal light to be replaced to replace the bulb easily. Then turn off the engine.

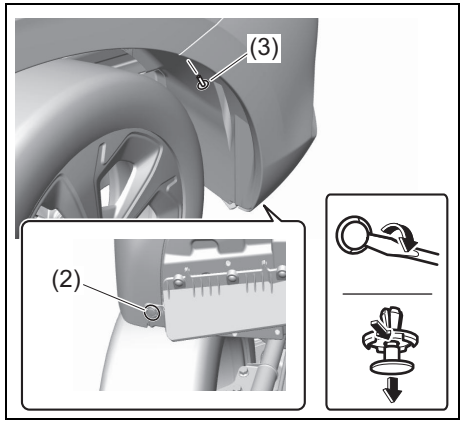

69T090200

2) Remove the clip (2) and screw (3).
   For removing the clip, use a flat blade screwdriver as show in the illustration.

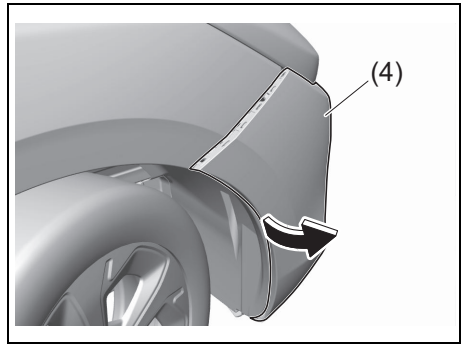

69T090210

3) Open the end of the front bumper (4) in arrow direction.

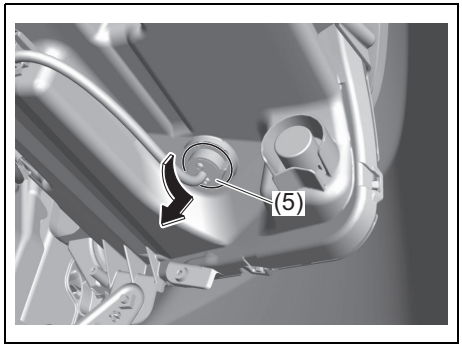

69T090220

4) To remove the bulb holder (5) of the front turn signal light from the light housing, turn the holder counterclockwise and pull it out.

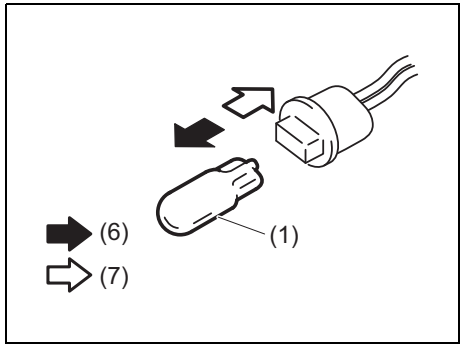

69T090230

(6) Removal
(7) Installation

5) To remove and install the bulb of the front turn signal light (1), simply pull out or push in the bulb.

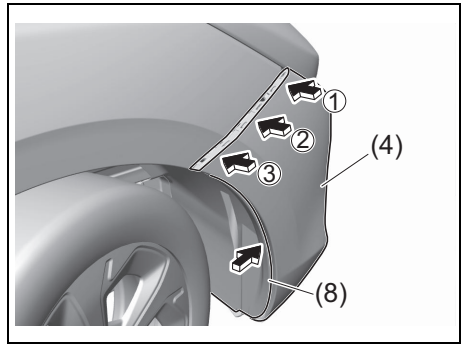

69T090420

NOTE:
When reinstalling the front bumper (4), push the end of the cover (8) into the inside of the front bumper, and then install the front bumper in numerical order by pushing in the arrow direction as shown in the illustration.

Side turn signal light

Outside rearview mirror type
LED is used. It is recommended that you take your vehicle to an authorized SUZUKI dealer for light replacement since special procedures are required.

Fender type

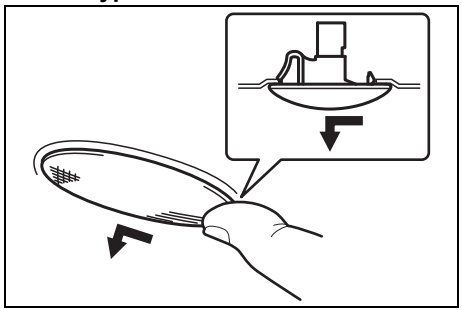

64J195

Since the bulb is built-in type, replace it as the light assembly. Remove the light assembly by sliding the light housing leftward with your finger.

High mount stop light

LED is used. It is recommended that you take your vehicle to an authorized SUZUKI dealer or a qualified workshop for bulb replacement since special procedures are required.

Rear combination light

For LED tail / brake light, it is recommended that you take your vehicle to an authorized SUZUKI dealer or a qualified workshop for light replacement since special procedures are required.

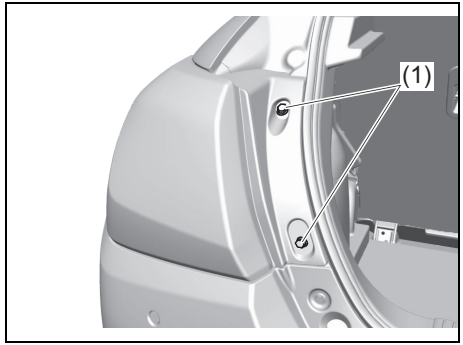

69T090240

1) With the tailgate opened, remove the bolts (1).

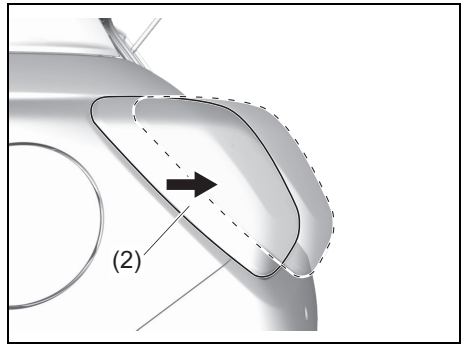

69T090410

2) Remove the light housing (2) by **pulling it straight back**.

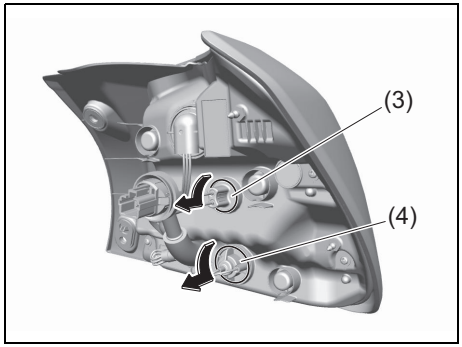

69T090250

3) To remove the bulb holder of the reversing light (3) or the rear turn signal light (4) from the light housing, turn the holder counterclockwise and pull it out.

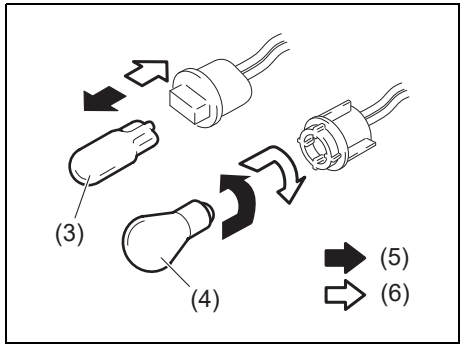

69T090260

(5) Removal
(6) Installation

4) To remove and install the bulb of the reversing light (3) or the rear turn signal light (4), simply pull out or push in the bulb.

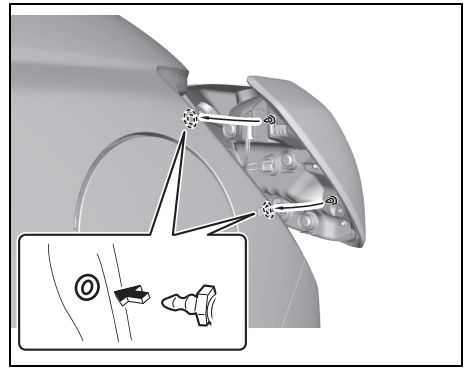

69T090270

NOTE:
When reinstalling the light housing, check that the clips are properly attached.

License plate light

Since special procedures are required, it is recommended that you take your vehicle to an authorized SUZUKI dealer or a qualified workshop for light replacement.

Rear fog light

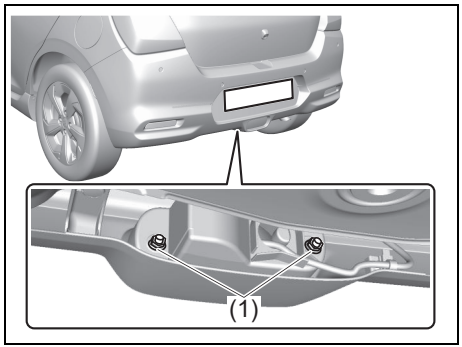

69T090290

1) Remove the nuts (1) and then push the rear fog light housing rearward.

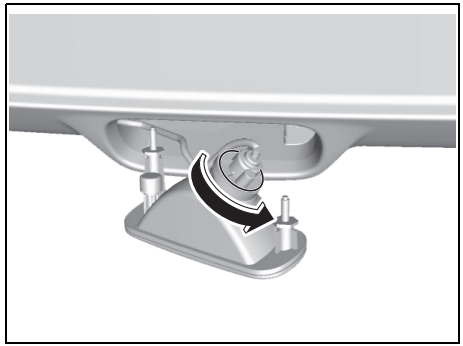

69T090300

2) Turn the bulb holder counterclockwise and pull it out.

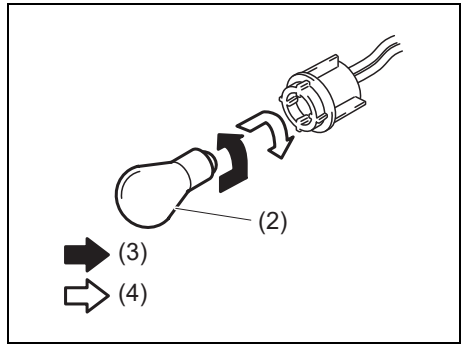

69T090310

(3) Removal
(4) Installation

3) To remove the bulb of the rear fog light (2) from bulb holder, push in the bulb and turn it counterclockwise. To install a new bulb, push it in and turn it clockwise.

Interior light

ITEM: Lights	WATTAGE	BULB No.
Front	12V 10W	–
Luggage compart-ment	12V 5W	–

If you need to replace the following bulbs indicated in the above table, consult an authorized SUZUKI dealer or a qualified workshop.

Front

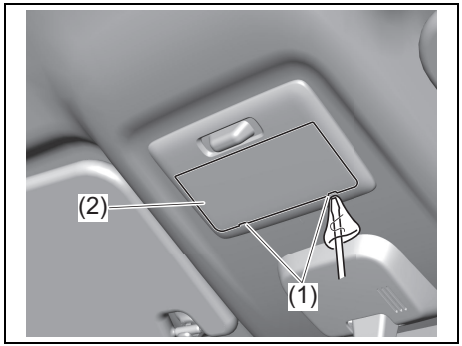

59RN09200

1) To prevent scratches, insert a commercially available flat-blade screwdriver covered with a soft cloth into the notch (1), and then remove the lens (2).

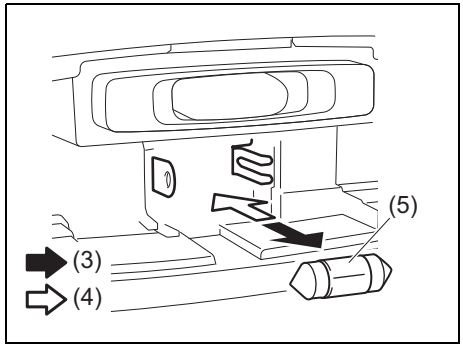

69T090320

(3) Removal
(4) Installation

2) Pull the bulb (5) out and then insert a new one.
3) After replacing the bulb, install the front interior light lens in the reverse order of removal.

Luggage compartment

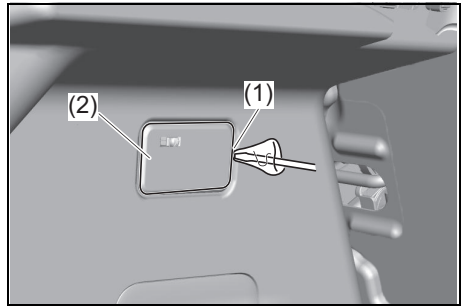

69T090330

1) To prevent scratches, insert a commercially available flat-blade screwdriver covered with a soft cloth into the notch (1), and then remove the lens (2).

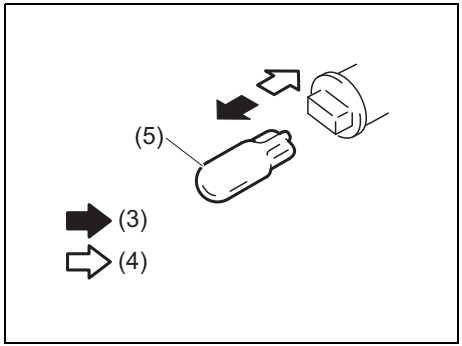

69T090340

(3) Removal
(4) Install

2) Pull the bulb (5) out and then insert a new one.
3) After replacing the bulb, install the luggage compartment light lens in the reverse order of removal.

Wiper blades

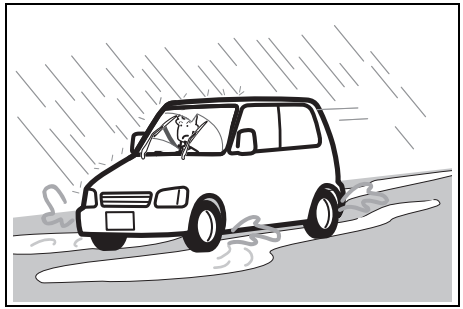

59RN09450

If the wiper blades become brittle or damaged, or make streaks when wiping, replace the wiper blades.

To install new wiper blades, follow the procedures below.

NOTICE
To avoid scratching or breaking the window, do not let the wiper arm strike the window while replacing the wiper blade.

NOTE:
Some wiper blades may be different from the ones described here depending on vehicle specifications. If so, consult an authorized SUZUKI dealer or a qualified workshop for proper replacement method.

For windshield wipers:

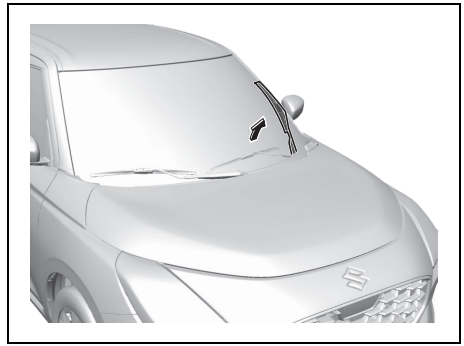

69T090350.

1) Hold the wiper arm away from the window.

NOTICE
When raising both of the front wiper arms, pull the driver's side wiper arm up first. **When returning the wiper arms, lower the passenger's side wiper arm first. Otherwise, the wiper arms may interfere with each other.**

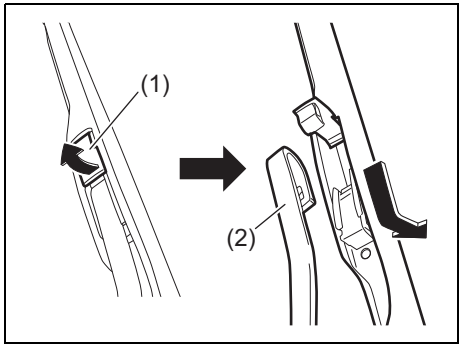

52RM70510.

2) Open the lock (1), slide the wiper frame and remove it from the arm (2) as shown.

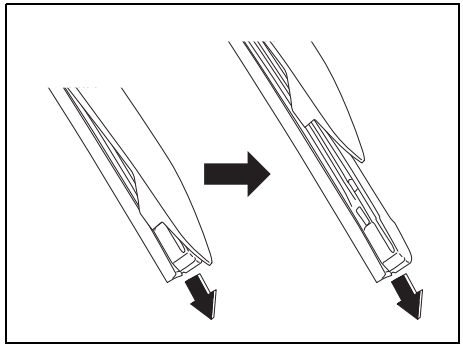

61MM0A211

3) Pull the locked end of the wiper blade firmly to unlock the blade and slide the blade out as shown.

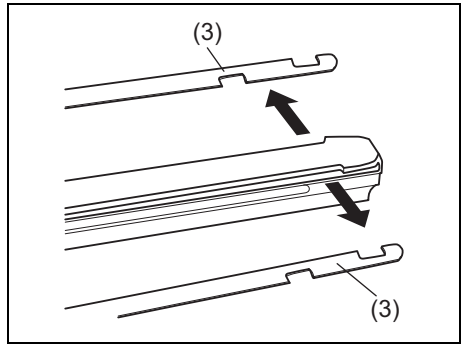

52RM70520

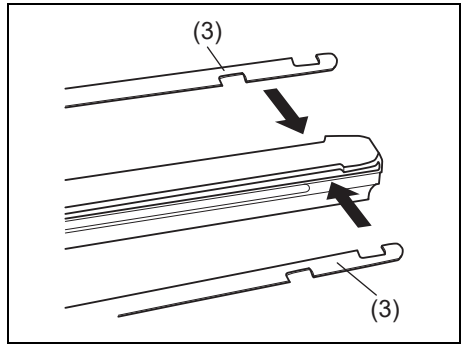

61MM0B098

(3) Retainer

4) If the new blade is provided without the two metal retainers (3), move them from the old blade to the new one.

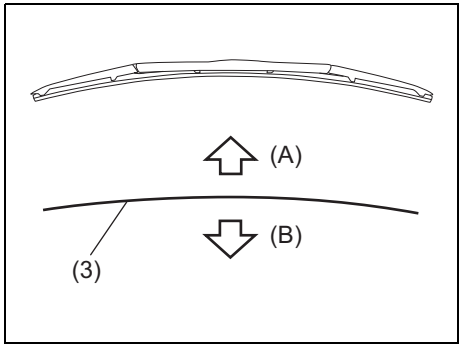

61MM0A212

(A) Up
(B) Down

NOTE:
When you install the metal retainers (3), make sure the direction of metal retainers as shown in the above illustrations.

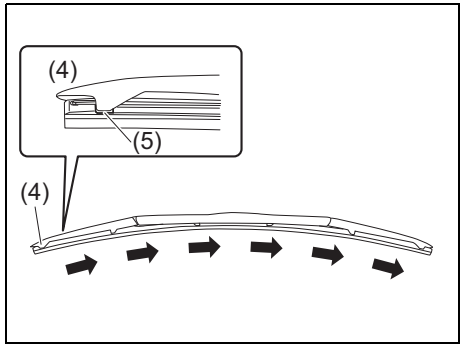

69T090430

(4) Locked end

5) Install the new blade in the reverse order of removal, with the locked end (4) positioned toward the wiper arm.
   Make sure the blade is properly retained by all the hooks. Lock the blade end into place.
6) Reinstall wiper frame to arm, making sure that the lock lever is snapped securely into the arm.

NOTICE
Fit the stopper side (5) of the wiper blade in the driver's seat side. Otherwise, the wiper blade may be misaligned while the wiper operates.

For rear wiper:

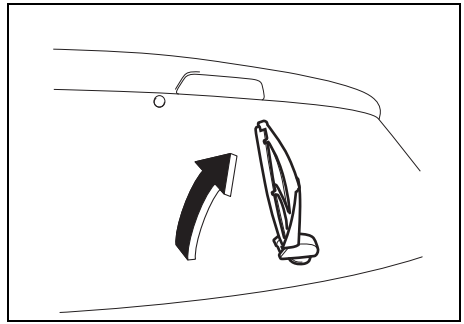

52RM70460

1) Hold the wiper arm away from the window.

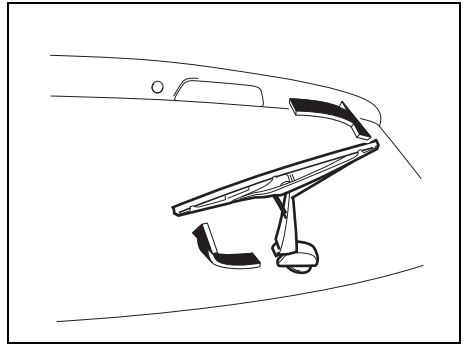

52RM70490

2) Remove the wiper frame from the wiper arm after rotating the wiper frame clockwise.

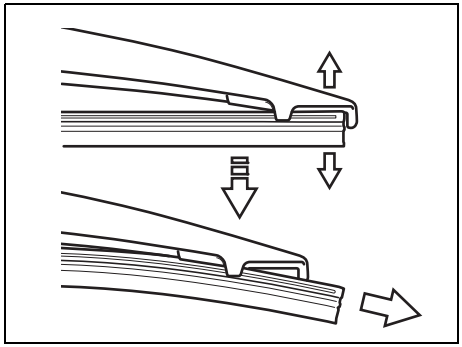

52RM70470

3) Slide the blade out as shown.

NOTE:
Do not flex the wiper blade frame end more than necessary. If you do, it can break off.

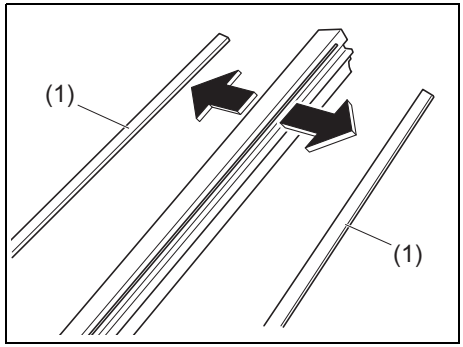

52RM70480

(1) Retainer

4) If the new blade is provided without the two metal retainers, move them from the old blade to the new one.
5) Install the new blade in the reverse order of removal.
   Check that the blade is properly retained by all the hooks.

Reinstall wiper frame to arm in the reverse order of removal.

Windshield washer fluid

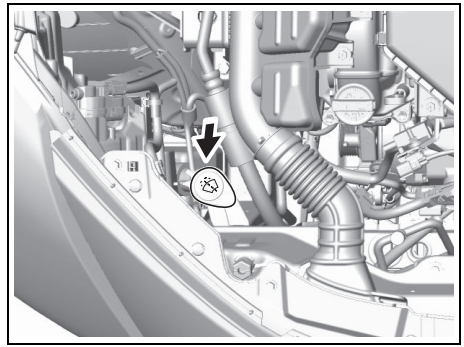

69T090360

Check that there is washer fluid in the tank. Refill it if necessary. Use a good quality windshield washer fluid, diluted with water as necessary.

⚠ WARNING

- **Do not use radiator antifreeze in the windshield washer reservoir. This can severely impair visibility when sprayed on the windshield, and also can damage your vehicle's paint.**
- **Do not add washer fluid when the engine is hot or operating as washer fluid contains alcohol and may catch fire if spilled on the engine, etc.**

⚠ CAUTION

Precautions for handling the washer fluid are written on the container. Refer to the instruction and read it carefully.

NOTICE

Damage may result if the washer motor is operated with no fluid in the washer tank.

NOTE:
SUZUKI highly recommends the use of ECSTAR brand windshield washer fluid. ECSTAR has been specially formulated for your SUZUKI product and contributes to the desired vehicle performance and ideal driving experience.

Air conditioning system

If you do not use the air conditioner for a long period, such as during winter, it may not give the best performance when you start using it again. To help maintain optimum performance and durability of your air conditioner, it needs to be run periodically. Operate the air conditioner at least once a month for one minute with the engine idling. This circulates the refrigerant and oil and helps protect the internal components.

Air conditioner filter replacement

Since special procedures are required, ask an authorized SUZUKI dealer or a qualified workshop for this job.

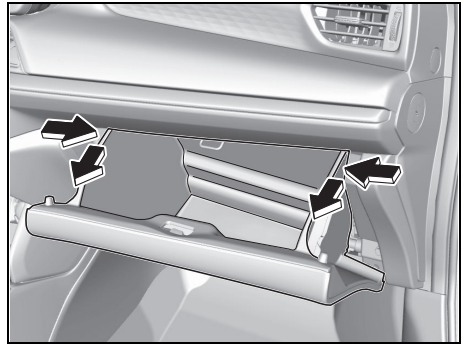

69T090370

1) To approach the air conditioner filter, remove the glove box by pressing both sides of the glove box inward and pulling it out.

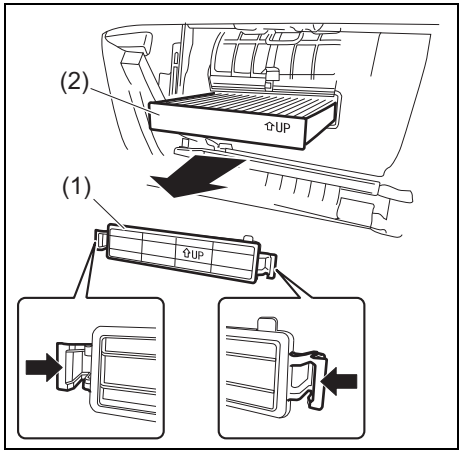

69T090380

2) Push the tabs on both sides of the holder (1) in the direction of the arrow to remove the filter (2).

Installing the Air conditioner filter

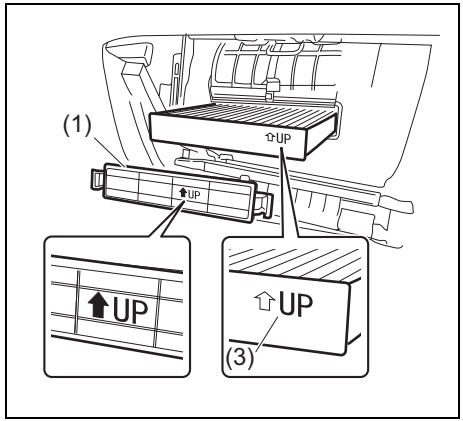

69T090440

1) Insert the filter with the arrow of the mounting direction mark (3) facing upward.
2) Attach the holder (1) by hooking the tabs on both sides to the case side.

Keyless push start system remote controller battery replacement

If the remote controller becomes unusable, replace the battery.

NOTE:
You may damage the remote controller when replacing its battery. Asking an authorized SUZUKI dealer or a qualified workshop is recommended.

To replace the battery of the remote controller:

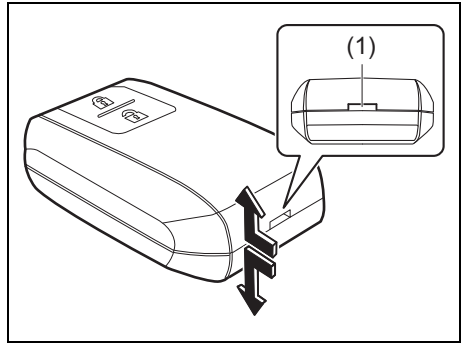

73S020020

1) Pull the key out from the remote controller.

2) Separate the remote controller up and down while applying force to the slot (1) on the side of the remote controller.

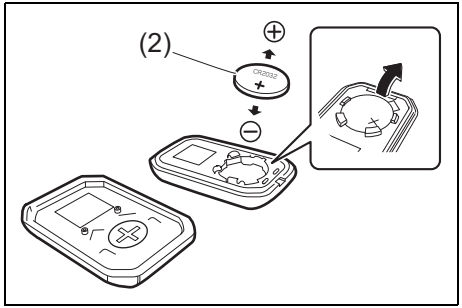

69T090470

(2) Lithium disc type battery: CR2032

3) Replace the battery (2) so its + terminal faces the bottom of the case as shown in the illustration.
4) Close the remote controller firmly.
5) Check that the door locks can be operated with the remote controller.
6) Dispose of the used battery properly according to applicable rules or regulations. Do not dispose of lithium batteries with ordinary household trash.

⚠ WARNING

Swallowing a lithium battery may cause serious internal injury. Do not allow anyone to swallow a lithium battery. Keep lithium batteries away from children and pets. If swallowed, contact a physician immediately.

NOTICE

- **The remote controller is a sensitive electronic instrument. To avoid damaging it, do not expose it to dust or moisture or tamper with internal parts.**
- **When replacing the battery by yourself, the remote controller could be damaged affected by static electricity. Discharge the static electricity built up in your body by touching metal before replacing the battery.**

NOTE:
Used batteries must be disposed of properly according to applicable rules or regulations and must not be disposed of with ordinary household trash.

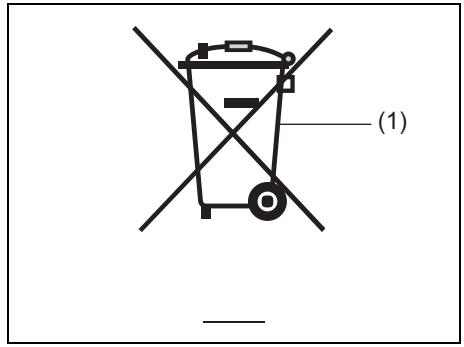

80JM133

(1) Crossed-out wheeled bin symbol

The crossed-out wheeled bin symbol (1) indicates that a used battery should be collected separately from ordinary household trash.

By ensuring the used battery is disposed of or recycled correctly, you will help prevent potential negative consequences for the environment and human health, which could otherwise be caused by inappropriate battery disposal. The recycling of materials will help to conserve natural resources. For more detailed information about disposing of or recycling the used battery, consult an authorized SUZUKI dealer or a qualified workshop.

Preparation before winter season

Windshield washer fluid

To prevent windshield washer fluid from freezing, dilute it by the ratio according to outside temperature.

Lead-acid battery

Check the liquid measure and the specific gravity of lead-acid battery. When it becomes cold, the battery performance gets worse. Also, it becomes difficult to start the engine by the weak battery. Refer to “Battery” (P.9-38).

Engine coolant

To prevent the inside of engine from corroding and freezing, use the designated engine coolant. Refer to “SPECIFICATIONS” (P.12-3).

NOTE:
To check the concentration of engine coolant or replace it, ask an authorized SUZUKI dealer or a qualified workshop.

Winter tyres and chocks

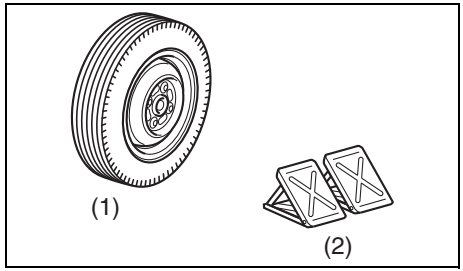

55T090670

(1) Winter tyre
(2) Chock

Winter tyres and chocks are necessary to drive on the snow roads or the frozen roads.

Before your driving

Snow on the roof

80J308

Remove snow on the roof before your driving. If you do not remove it, snow may fall during your driving and it may hinder your view.

- For vehicle equipped with Dual Sensor Brake Support II (DSBS II), the Dual Sensor Brake Support II (DSBS II) may not operate properly when there is snow or frost on the windshield.

Frozen wiper blades

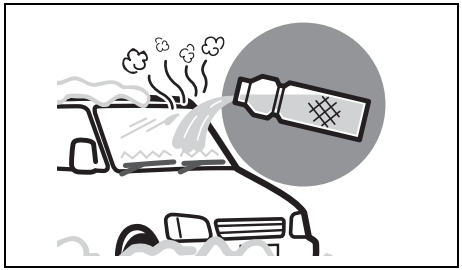

65P60060

Melt ice by pouring lukewarm water. After melting it, wipe off water to prevent refreezing. If you operate the wiper blades forcedly when ice stays freezing, the wiper rubbers may be damaged and the wiper blades may be broken.

Snow and frost on the window glasses

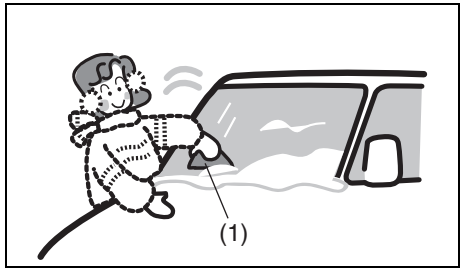

82K261

Use the plastic board (1). You can remove snow and frost not to damage the window glasses.

- For vehicle equipped with Dual Sensor Brake Support II (DSBS II), the Dual Sensor Brake Support II (DSBS II) may not operate properly when there is snow or frost on the windshield.

Frozen outside rearview mirrors

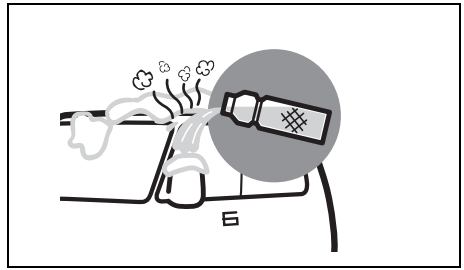

65P60070

Melt ice by pouring lukewarm water. After melting it, wipe off water to prevent refreezing. If you operate the outside rearview mirrors forcedly when ice stays freezing, the outside rearview mirrors may be broken.

NOTICE

- **For the outside rearview mirror folding switch, check if you can move the mirrors by your hands first. Then, operate the switch. If you repeat to operate the switch when ice stays freezing, the mirrors may be broken.**
- **For the remote folding mirrors, deactivate the function of the remote folding mirrors in the cold condition where the outside rear-view mirrors are frozen. If you repeat to operate them when ice stays freezing, the mirrors may be broken.**

Frozen doors

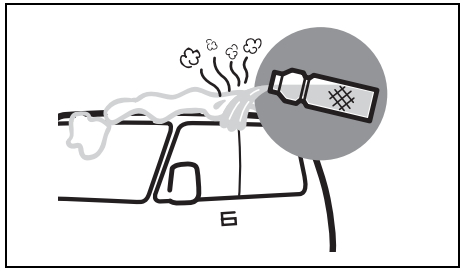

65P60080

Pour lukewarm water except the keyhole on the door. After opening the door, wipe off water. If you open the door forcedly when ice stays freezing, the rubbers around the door may be come off and broken.

Snow attaching to shoes

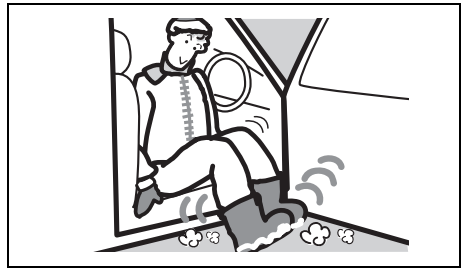

80J312

Remove snow attaching to shoes before getting in your vehicle. If you do not remove it, you may slip when operating the pedals and the window glasses may mist easily because of high humidity inside the vehicle.

When parking the vehicle outside

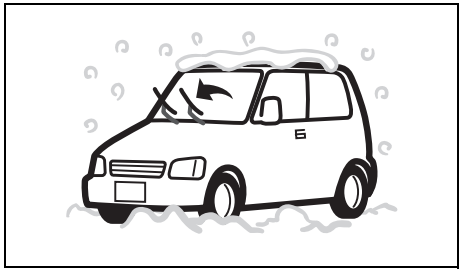

80J315

For vehicle equipped with Dual Sensor Brake Support II (DSBS II), the Dual Sensor Brake Support II (DSBS II) may not operate properly when there is snow or frost on the windshield.

NOTICE

- **If you park the vehicle under eaves or trees, the roof of the vehicle may be dented by accumulated snow or fallen snow.**
  When it is snowing, do not park the vehicle under eaves or trees.
- **If you park the vehicle outside when it is snowing, the wiper arms may be deformed or the wiper blades may be frozen on the windshield by snow weight. Raise the wiper arms away from the windshield when parking the vehicle.**

(Continued)

NOTICE

(Continued)

- **When raising both of the front wiper arms, pull the driver's side wiper arm up first.**
  When returning the wiper arms, lower the passenger's side wiper arm first. Otherwise, the wiper arms may interfere with each other.

Tyre chains

Tyre chains should only be used if they are needed to increase traction or are required by law. Check that the chains you use are the correct size for your vehicle's tyres. Also check that there is enough clearance between the fenders and the chains as installed on the tyres.

Install the chains on the front tyres tightly, according to the chain manufacturer's instructions. Retighten the chains after driving about 1.0 km (1/2 mile) if necessary. With the chains installed, drive slowly.

NOTICE

- **If you hear the chains hitting against the vehicle body while driving, stop and tighten them.**
- **If your vehicle is equipped with full wheel caps, remove the wheel caps before installing the chains or the wheel caps can be damaged by the chain bands.**

EMERGENCY SERVICE

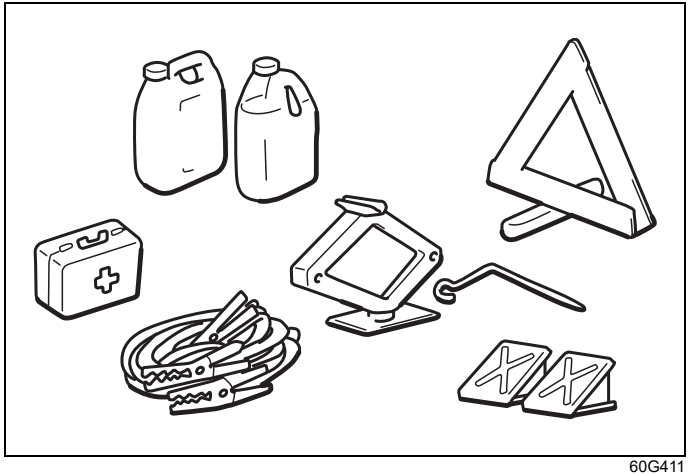

60G411

Towing by tow truck 10-1
Towing by using towing eye 10-3
eCall (if equipped) 10-7
Tyre changing tool (if equipped) 10-21
Jacking instructions 10-22
Full wheel cover (if equipped) 10-27
Flat tyre repair kit (if equipped) 10-27
Jump-starting instructions 10-32
Running out of battery 10-33
If you get a flat tyre while driving 10-33
Engine trouble: Starter does not operate 10-34
Engine trouble: Does not start 10-34
Engine trouble: Overheating 10-34

Towing by tow truck

If you need to have your vehicle towed, contact a professional service. An authorized SUZUKI dealer or a qualified workshop can provide you with detailed towing instructions.

⚠ WARNING

For vehicle equipped with the Dual Sensor Brake Support II (DSBS II), if your vehicle is towed with the engine on, press the Dual Sensor Brake Support II (DSBS II) OFF switch and turn off the Dual Sensor Brake Support II (DSBS II). If not, an accident related to the system being turned on may occur.

NOTICE

To help avoid damage to your vehicle during towing, proper equipment and towing procedures must be used.

2-Wheel Drive (2WD) CVT

CVT vehicle may be towed using either of the following methods.

- Being towed from the front:
  Lift the front wheels and keep the rear wheels on the ground. Before the vehicle is towed, make sure that the parking brake is released.
- Being towed from the rear:
  Lift the rear wheels and place a dolly under the front wheels.

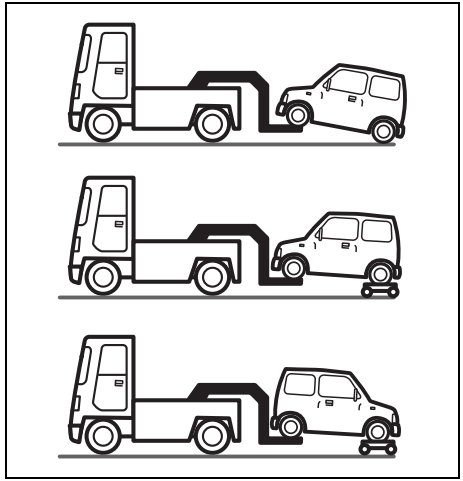

67T00160

- There is also a way to use a vehicle transportation car to move a malfunctioning vehicle.
- If the vehicle does not start even if the engine is running, or if it makes a different sound than usual, it could be a failure of the drivetrain. Consult with an authorized SUZUKI dealer or a qualified workshop before towing.

NOTICE

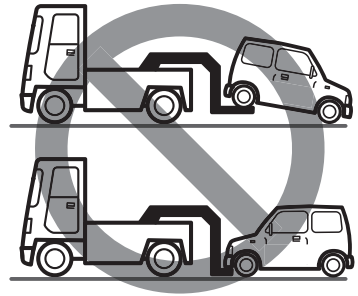

67T00158

If your vehicle is towed with the front wheels on the ground, it can result in damage to the CVT.
For 2-wheel drive vehicle (2WD), tow a vehicle with the front wheels (drive wheel) or all four wheels lifted.

(Continued)

NOTICE

(Continued)

67T00157

Towing a vehicle with a sling-type truck as shown in the figure may cause damage to the bumper or body. Do not tow a vehicle with a sling-type truck.

2-wheel drive (2WD) manual transmission

Manual transmission vehicle may be towed using either of the following methods.

- Being towed from the front:
  Lift the front wheels and keep the rear wheels on the ground. Before the vehicle is towed, make sure that the parking brake is released.
- Being towed from the rear:
  Lifted and the front wheels on the ground, provided the steering and drive-train are in operational condition. Before towing, check that transmission is in neutral, the ignition mode is “ACC”, and the steering wheel is secured with a clamping device designed for towing service.

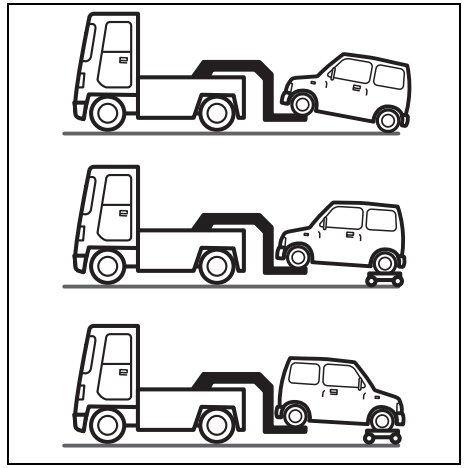

67T00160

NOTICE

The steering column is not strong enough to withstand shocks transmitted from the front wheels during towing. Always unlock the steering wheel before towing.

4-wheel drive (4WD)

Your vehicle should be towed under one of the following conditions:

- With all four wheels on a flat-bed truck.
- With the front or rear wheels lifted and a dolly under the other wheels.

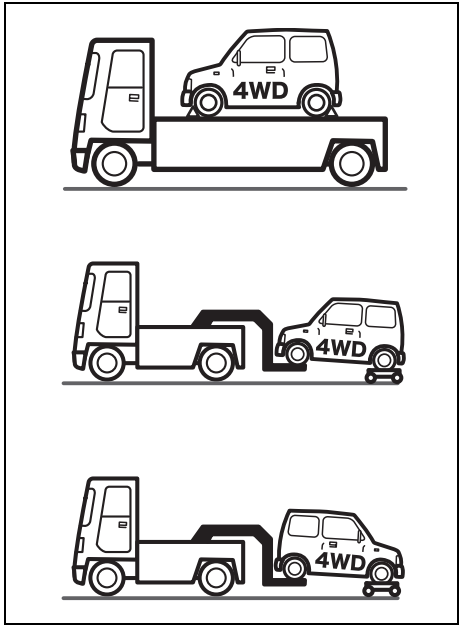

69T100130

NOTICE

Towing the 4WD automatic transaxle vehicle with four wheels on the ground can result in damage to the automatic transaxle and/or the 4WD system.

Towing by using towing eye

⚠ WARNING

For vehicle equipped with the Dual Sensor Brake Support II (DSBS II), if your vehicle is towed with the engine on, press the Dual Sensor Brake Support II (DSBS II) OFF switch and turn off the Dual Sensor Brake Support II (DSBS II). If not, an accident related to the system being turned on may occur.

Hanging point of a towing cable

Hang a towing cable on a towing eye.
The towing eye is provided on the front of the vehicle for use in emergency situations or sea shipping purposes.

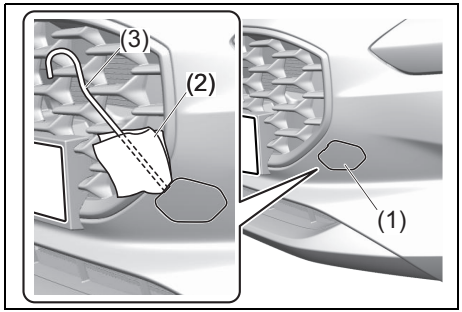

69T100010

1) Remove the cover (1) by using a jack handle (3) (if equipped) or flat-bladed screwdriver, etc. covered with a soft cloth (2) as shown in the illustration.

NOTICE

Do not apply excessive force as it may damage the cover strap.

NOTE:
We recommend that you fasten the cover with tape to prevent damage during towing.

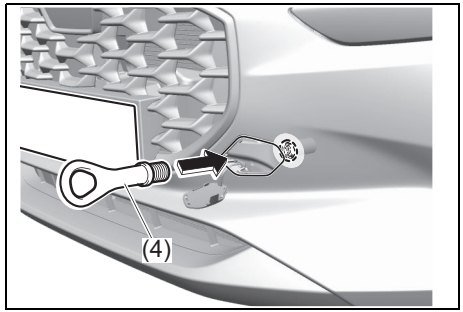

69T100020

2) Install the towing eye (4) by hand.

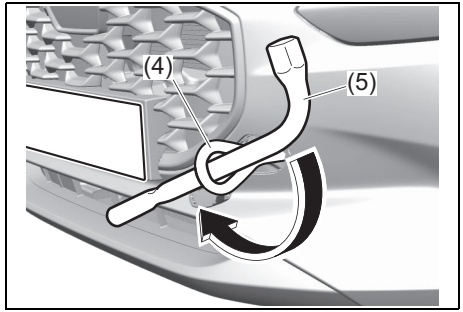

69T100030

3) To tighten the towing eye (4), turn it clockwise by using a wheel wrench (5) (if equipped) or hard metal bar until the towing eye (4) is securely installed.

NOTICE

- **Observe the following instructions when using the towing eye (4). Otherwise, the towing eye or the vehicle body may break and cause serious injury or damage:**
  - **Avoid pulling the vehicle to get out of severe snowy, muddy or sandy conditions.**
  - **Avoid sudden starts or erratic driver performance which could cause excessive stress on the towing eye.**

  In such cases, we recommend that you contact a professional service.
- **Do not use the towing eye (4) for towing another vehicle or transporting your vehicle by a car carrier trailer, etc.**

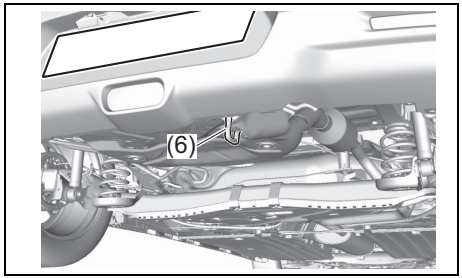

69T100040

NOTICE

- **Your vehicle was originally designed to carry people and a normal amount of cargo, not to tow a trailer.**
- **The frame hook (6) is provided on the rear of the vehicle for use in sea shipping purposes only. Do not use the frame hook for towing another vehicle, being towed by another vehicle or transporting your vehicle by a car carrier trailer, etc. Otherwise, the frame hook or the vehicle body may break and cause serious injury or damage.**

Other Holes

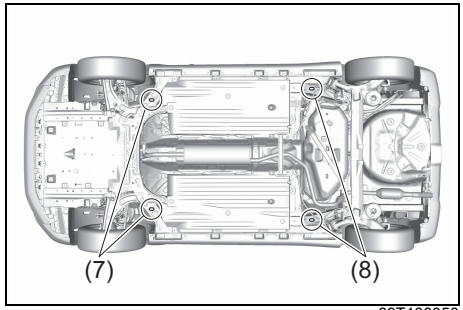

69T100050

The frame holes (7) and (8) are provided only for transporting by a car carrier trailer.

⚠ WARNING

Do not use the frame holes (7) and (8) for towing purpose. These holes may break and cause serious injury or damage.

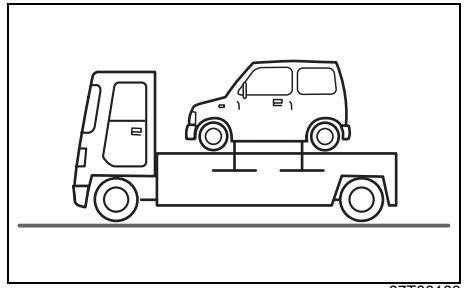

67T00163

When using ropes to secure the vehicle, refer to the above figure.

⚠ CAUTION

Do not tighten the rope excessively. The vehicle may be damaged.

Towing by using a rope

1) Hang a towing cable on a towing eye horizontally, so that the hanging side would be the same for the towing vehicle and the towed vehicle if possible.

2) Keep the engine running.
   - When you cannot start the engine, press the engine switch to change the ignition mode to the position other than LOCK (OFF).
   - Turn the steering wheel to left and right to check that the steering lock is released.
   - For the vehicle with SUZUKI SAFETY SUPPORT, when the engine switch is in ON position, press the Dual Sensor Brake Support II (DSBS II) OFF switch and turn off the Dual Sensor Brake Support II (DSBS II).

⚠ WARNING

If you drive the vehicle without the engine running, it may cause an accident.
When your vehicle is towed by using a rope, observe the following instructions.
- **Do not press the engine switch to change the ignition mode to LOCK (OFF). Otherwise, the steering wheel will be locked and not be turned.**

(Continued)

⚠ WARNING

(Continued)
- **Depress the brake pedal more firmly than usual, as the brake booster does not work.**
- **Operate the steering wheel with more force, as the power steering system does not work.**

NOTICE

If you cannot release the steering lock, you cannot operate the steering wheel and it may cause an accident.
If you cannot release the steering lock because of malfunction and running out of the lead-acid battery, do not perform towing by using a rope.

3) Shift the gearshift lever into “N” (neutral).

NOTE:
- *If you cannot shift the gearshift lever into “N” (neutral), towing by using a towing cable is not possible. Consult an authorized SUZUKI dealer or a professional service.*
- *If you cannot shift the gearshift lever from “P” to the other position with the engine running and the brake pedal depressed, because of malfunction and running out of the lead-acid battery, cancel the shift lock system referring to “Canceling the shift lock system” in the “OPERATING YOUR VEHICLE” section.*

4) During towing, make sure that a towing cable is not slack. To avoid a collision, carefully drive your vehicle checking the brake lights of the front vehicle.
   - To warn the driver of a following vehicle, turn on the hazard warning lights of the towed vehicle.

⚠ WARNING

If you continuously depress the brake pedal on a long or steep downhill slope, the brakes could overheat and become ineffective.
When there is a long or steep downhill slope, do not perform towing by a rope. Make a request of a tow truck.

NOTICE

- **If a strong impact is applied to a towing eye or a towing cable by sudden starting etc., the towing eye or the vehicle body may be damaged.**
  When the vehicle needs to be towed, do not apply a strong impact to a towing eye or a towing cable by sudden starting etc.
  Do not accelerate suddenly.
- **If the vehicle unavoidably needs to be towed by a rope, tow your vehicle on paved roads. Do not exceed the vehicle speed of 30 km/h (19 mph) and do not drive the vehicle for longer than 30 km (19 miles) to protect the transmission.**

eCall (if equipped)

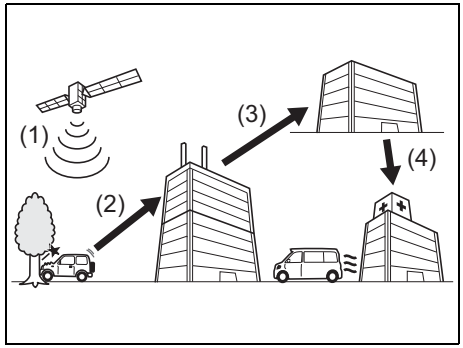

78RB21002

(1) Location information is received.
(2) Vehicle information is transmitted to emergency contact center.
(3) Emergency contact center informs regional emergency contact center (112 service) of accident conditions.
(4) Emergency vehicle is dispatched.

The eCall is a system equipped with the vehicle. This system automatically sends the information to the emergency contact center when a crush occurs calls up an eCall operator for quick help.

NOTE:

- *Vehicle eCall system's correct functioning directly depends on presence of eCall operator in country, and availability of its services.*
- *The responsibility of the components of the eCall system (with the exception of equipment installed on the vehicle) is borne by the operator of the eCall system.*

⚠ CAUTION

- **The eCall is only available where communication is possible using wireless mobile communication. This system cannot be used in areas with atmospheric disturbance, remote areas and areas where a signal cannot be obtained.**
- **If the microphone, speaker or "SOS" button is malfunctioning, eCall cannot operate properly.**
  Have the function checked by an authorized SUZUKI dealer or a qualified workshop.
- **For normal operating condition of the eCall, use SUZUKI genuine audio system.**

How to use eCall

The eCall has 2 modes, automatic operation mode and manual operation mode.

Left hand drive vehicle

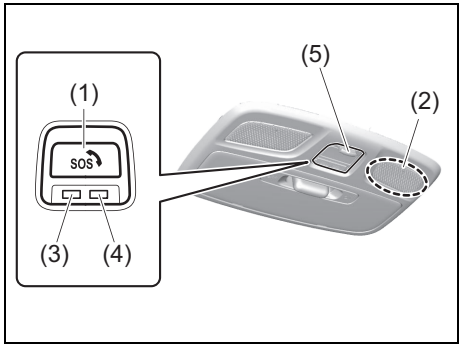

69T100100

Right hand drive vehicle

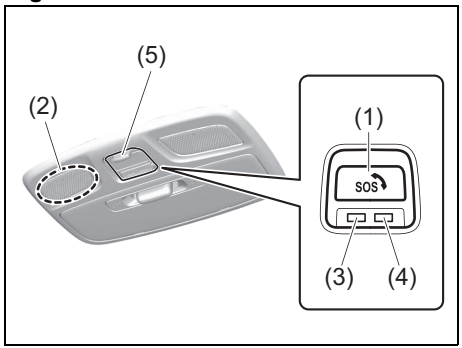

69T100110

(1) “SOS” button
(2) eCall microphone
(3) Green indicator
(4) Red indicator
(5) Cover

Automatic operation mode

The eCall system is operated when the engine switch is pressed to change the ignition mode to ON. In the event of an accident that an airbag is activated, signals about your vehicle’s various information such as the vehicle’s position are sent automatically to the emergency contact center.

The green indicator (3) will change from a blinking state to on, and you can call up an emergency contact center operator using the microphone (2).

Manual operation mode

Open the cover (5) for manual operation.

When the engine switch is pressed to change the ignition mode to ON, push and hold “SOS” button (1) for more than 1 second and release it.

The green indicator (3) will change from a blinking state to on, and you can call up an emergency contact center operator using the microphone (2).

NOTE:
(Only for manual operation mode)
Do not perform a test operation in order to confirm the function using manual operation.
Cancel the operation if the system is accidentally operated. Refer to “Cancellation of eCall” (P.10-12) for details.

NOTE:
(For both automatic and manual operation modes)

- *A tone will sound when the cancellation period by manual operation and the emergency call operates for calling up.*
- *The vehicle information (for example, the vehicle location, direction, VIN, accident time, etc.) is sent to the emergency contact center when eCall operates. The above information will not be sent except when the emergency call is performed.*
- *Any conversation held during communication is not recorded by the vehicle itself, but is recorded by the emergency contact center.*

- *Communication from the emergency contact center operator can be heard from the speaker on the right side of the instrument panel (right hand drive vehicle) or the left side of the instrument panel (left hand drive vehicle). If the audio system is in use, the communication from the emergency contact center operator will be prioritized and any other audio will be automatically muted.*
- *The eCall is equipped with a built-in battery as a backup power for the damaged onboard battery caused by an accident. The useful life of the built-in battery will be about 3 years under the temperature conditions between -40 °C and 85 °C (-40 °F and 185 °F).*
- *If communication to the emergency contact center by automatic operation mode is used, replace the built-in battery for the safety. Consult your an authorized SUZUKI dealer or a qualified workshop when you replace the battery.*
- *When installing electrical equipment such as navigation terminal, consult an authorized SUZUKI dealer or a qualified workshop. Otherwise, there is a danger of hindering the functioning of eCall components, malfunction, etc.*

NOTE:
- *If the red indicator blinks every 1 second and the eCall warning message appears on the information display at the same time, an undercharged condition of the built-in battery or system error is estimated. Have your vehicle inspected by an authorized SUZUKI dealer or a qualified workshop soon. When the built-in battery is in the undercharged condition, replace the battery as soon as possible even though the remaining battery power is considered to last for about 10 minute call with the emergency contact center operator. This built-in battery is specified for the eCall exclusively.*
  Therefore when you replace the battery, consult your an authorized SUZUKI dealer or a qualified workshop

NOTE:
Used batteries must be disposed properly according to applicable rules or regulations and must not be disposed with ordinary household trash.

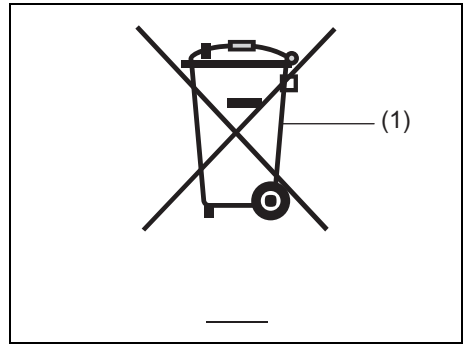

80JM133

(1) Crossed-out wheeled bin symbol

The crossed-out wheeled bin symbol (1) indicates that used battery should be collected separately from ordinary household trash.

By ensuring the used battery is disposed or recycled correctly, you will help prevent potential negative consequences for the environment and human health, which could otherwise be caused by inappropriate trash handling of the battery. The recycling of materials will help to conserve natural resources. For more detailed information about disposing or recycling of the used battery, consult your SUZUKI dealer or a qualified workshop.

Indicator light
The indicator light in “SOS” button operate as follows, according to the eCall operation state and communication state.

Green indicator	Red indicator	State
Off	Off	Normal operation. (#1)
On	On	For about 5 seconds when the engine switch is pressed to change the ignition mode to ON. (#1)
Blinks (approximately every 3 seconds)	Off	There is no eCall, GPS, GALILEO connection or modem network. (#2) The “eCall” device is out of communication range.
Blinks (approximately every 1 second)	Off	The “eCall” operation begins.
On	Off	The “eCall” communication is established.
Blinks (approximately every 0.6 seconds)	Off	The minimum data (the vehicle chassis number (VIN) or the location of your vehicle) is transmitted to the emergency contact center

(#1) “eCall” system is activated 30 seconds after the engine switch is pressed to change the ignition mode to ON for both automatic operation mode and manual operation mode. If “SOS” button is pressed during 30 seconds after the engine switch is pressed to change the ignition mode to ON, "eCall" system is activated 30 seconds after the engine switch is pressed to change the ignition mode to ON.
(#2) You can customize the system to stop blinking of the green indicator. Ask an authorized SUZUKI dealer or a qualified workshop for details.

Green indicator	Red indicator	State
Blinks (approximately every 0.3 seconds)	Off	The “eCall” communication finishes normally.(#3)
Off	Blinks (approximately every 1 second)	The built-in battery in eCall is discharged or system error.
Off	Blinks (approximately every 0.3 seconds)	The “eCall” communication finishes abnormally or communication fails.

(#3) When the call is completed, either the green indicator or the red indicator could blink, depending on the emergency contact center behavior.

eCall warning message

69T100120

"SERVICE
CONNECTED"

If the above image and message appears on the information display, there may be problem with eCall.
Have your vehicle inspected by an authorized SUZUKI dealer or a qualified workshop.

eCall Controller & Red indicator
This system has the eCall controller. This controller has an expiration period. If an expiration period comes, this controller is required to renew.

When six months come before the expiration of the eCall controller, Red indicator blinks and the message of "SERVICE CONNECTED" also appears on the information display as shown in the above illustration. If Red indicator blinks and this message appears simultaneously, consult an authorized SUZUKI dealer or a qualified workshop for renew the expiration date.

Cancellation of eCall

The operation can be canceled only when communication is performed via manual operation. The operation can be canceled if "SOS" button is pressed before communication is established with an eCall operator.

NOTE:
- *Communication cannot be canceled in automatic operation mode.*
- *The cancellation of the communication is available until 10 seconds after pushing the "SOS" button first.*
- *Communication cannot be canceled from the vehicle after communication is established with* an eCall *operator. Ask the emergency contact center to cancel the communication.*

Implementing Regulation 2017/78 Annex 1, Part 3

1.DESCRIPTION OF THE ECALL IN-VEHICLE SYSTEM		Conformity
1.1.	Overview of the 112-based eCall in-vehicle system, its operation and functionalities. See “eCall (if equipped).”	O
1.2.	The 112-based eCall service is a public service of general interest and is accessible free of charge	O
1.3.	The 112-based eCall in-vehicle system is activated by default. It is activated automatically by means of in-vehicle sensors in the event of a severe accident. See “Automatic operation mode.”	O
	It will also be triggered automatically when the vehicle is equipped with a TPS system which does not function in the event of a severe accident.	N/A
1.4.	The 112-based eCall in-vehicle system can also be triggered manually, if needed. Instructions for manual activation of the system. See “Manual operation mode.”	O
1.5.	In the event of a critical system failure that would disable the 112-based eCall in-vehicle system, the following warning will be given to the occupants of the vehicle See “eCall Warning Message.”	O

O = This description is applied to the regulation and is equipped with your vehicle.
N/A = This description is not equipped with your vehicle.

2.INFORMATION ON DATA PROCESSING		Conformity
2.1.	Any processing of personal data through the 112-based eCall in-vehicle system shall comply with the personal data protection rules provided for in Directives 95/46/EC and 2002/58/EC of the European Parliament and of the Council, and in particular, shall be based on the necessity to protect the vital interests of the individuals in accordance with Article 7(d) of Directive 95/46/EC.	O
2.2.	Processing of such data is strictly limited to the purpose of handling the emergency eCall to the single European emergency number 112.	O
2.3.	Types of data and its recipients	
2.3.1.	The 112-based eCall in-vehicle system may collect and process only the following data: Vehicle Identification Number, Vehicle type (passenger vehicle or light commercial vehicle), Vehicle propulsion storage type (gasoline/diesel/CNG/LPG/electric/hydrogen), Vehicle last three locations and direction of travel, Log file of the automatic activation of the system and its timestamp	O
2.3.2.	Recipients of data processed by the 112-based eCall in-vehicle system are the relevant public safety answering points designated by the respective public authorities of the country on which territory they are located, to first receive and handle eCalls to the single European emergency number 112.	O

O = This description is applied to the regulation and is equipped with your vehicle.

2.INFORMATION ON DATA PROCESSING		Conformity
2.4.	Arrangements for data processing	
2.4.1.	The 112-based eCall in-vehicle system is designed in such a way as to ensure that the data contained in the system memory is not available outside the system before an eCall is triggered.	O
2.4.2.	The 112-based eCall in-vehicle system is designed in such a way as to ensure that it is not traceable and not subject to any constant tracking in its normal operation status.	O
2.4.3.	The 112-based eCall in-vehicle system is designed in such a way as to ensure that data in the system internal memory is automatically and continuously removed.	O
2.4.3.1.	The vehicle location data is constantly overwritten in the internal memory of the system so as always to keep maximum of the last three up-to-date locations of the vehicle necessary for the normal functioning of the system.	O
2.4.3.2.	The log of activity data in the 112-based eCall in-vehicle system is kept for no longer than necessary for attaining the purpose of handling the emergency eCall and in any case not beyond 13 hours from the moment an emergency eCall was initiated.	O

O = This description is applied to the regulation and is equipped with your vehicle.

2.INFORMATION ON DATA PROCESSING		Conformity
2.5.	Modalities for exercising data subject's rights	
2.5.1.	The data subject (the vehicle's owner) has a right of access to data and as appropriate to request the rectification, erasure or blocking of data, concerning him or her, the processing of which does not comply with the provisions of Directive 95/46/EC. Any third parties to whom the data have been disclosed have to be notified of such rectification, erasure or blocking carried out in compliance with this Directive, unless it proves impossible or involves a disproportionate effort.	O
2.5.2.	The data subject has a right to complain to the competent data protection authority if he or she considers that his or her rights have been infringed as a result of the processing of his or her personal data.	O
2.5.3.	Contact service responsible for handling access requests (if any):	N/A

O = This description is applied to the regulation and is equipped with your vehicle.
N/A = This description is not equipped with your vehicle.

3.INFORMATION ON THIRD PARTY SERVICES AND OTHER ADDED VALUE SERVICES (IF FITTED)		Conformity
3.1.	Description of the operation and the functionalities of the TPS system/ added value service:	N/A
3.2.	Any processing of personal data through the TPS system/other added value service shall comply with the personal data protection rules provided for in Directives 95/46/EC and 2002/58/EC.	N/A
3.2.1.	Legal basis for the use of TPS system and/or added value services and for processing data through them:	N/A
3.3.	The TPS system and/or other added value services shall process personal data only on the base of the explicit consent of the data subject (the vehicle's owner or owners).	N/A
3.4.	Modalities for data processing through TPS system and/or other added value services, including any necessary additional information regarding traceability, tracking and processing of personal data:	N/A
3.5.	The owner of a vehicle equipped with a TPS eCall system and/or other added value service in addition to the 112-based eCall in-vehicle system has the right to choose to use the 112-based eCall in-vehicle system rather than the TPS eCall system and the other added value service.	N/A
3.5.1.	Contact details for handling TPS eCall system deactivation requests:	N/A

N/A = This description is not equipped with your vehicle.

Connected service (European countries except some countries)

3.INFORMATION ON THIRD PARTY SERVICES AND OTHER ADDED VALUE SERVICES (IF FITTED)		Conformity (With connected service)
3.1.	Description of the operation and the functionalities of the TPS system/added value service:	see the next sheet
3.2.	Any processing of personal data through the TPS system/other added value service shall comply with the personal data protection rules provided for in Directives 95/46/EC and 2002/58/EC.	O
3.2.1.	Legal basis for the use of TPS system and/or added value services and for processing data through them:	GDPR
3.3.	The TPS system and/or other added value services shall process personal data only on the base of the explicit consent of the data subject (the vehicle's owner or owners).	O
3.4.	Modalities for data processing through TPS system and/or other added value services, including any necessary additional information regarding traceability, tracking and processing of personal data:	see the next sheet
3.5.	The owner of a vehicle equipped with a TPS eCall system and/or other added value service in addition to the 112-based eCall in-vehicle system has the right to choose to use the 112-based eCall in-vehicle system rather than the TPS eCall system and the other added value service.	O
3.5.1.	Contact details for handling TPS eCall system deactivation requests:	N/A

N/A = This description is not equipped with your vehicle.

The communication device equipped with your vehicle includes free/open source software.
The license information and/or source code for free/open source software is available through the following URL.
https://www.denso-ten.com/support/source/oem/sg1/

System overview of added value services

- Data processing flow

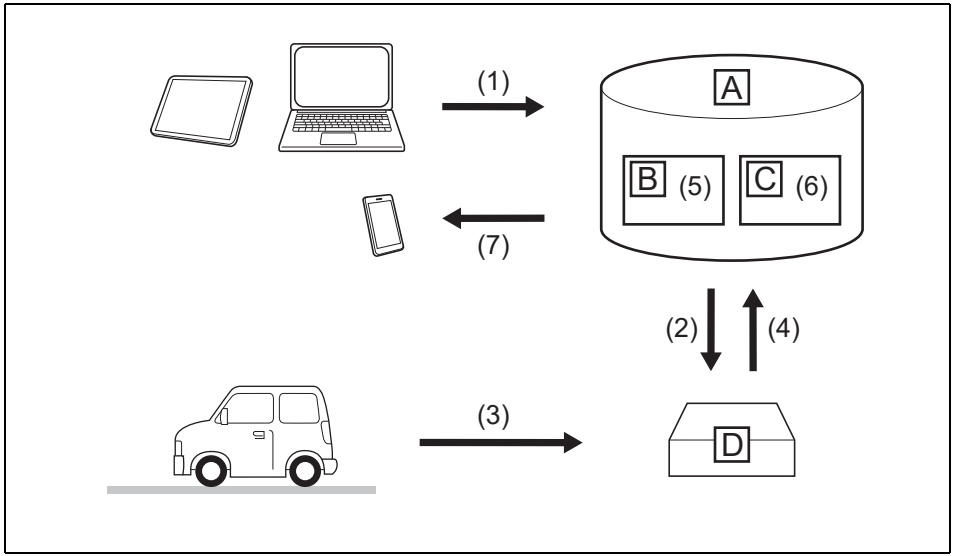

65T50850

A: Server
B: Storage
C: Processing
D: DCM

(1) Customer activates service on Suzuki Web site & accepts terms of services according to GDPR.
(2) Server activates the service in the DCM and defines which vehicle data to collect.
(3) Defined vehicle data is collected by the DCM.
(4) Data is shared with the server.
(5) Data is stored in the server.
(6) Data is processed in the server for fulfilling the service.
(7) Processed data is presented to the customer.

Visit the Suzuki Web site after launch of the added value services for a list of eligible service.

HOT PARTS! EXPLOSION!

Erroneous handling of built-in battery contained in eCall equipment may result in heat generation, explosion or fire possibly leading to burn injury or physical damage. To ensure safety and to avoid any possibilities of any accidents, please observe the following precautions.

– Do not heat in high extreme temperature during use, storage or transportation. Heating batteries in high extreme temperature damages resin components like a gasket, a separator and so on. The damages cause ignition, rupture and the leakage of flammable liquid or gas. Moreover, if the batteries are dropped into fire or a hot oven for disposal, it may burst and burn fiercely.

– Do not disassemble nor deform. If Batteries are disassembled, irritant gases may be released, and exposed lithium alloy may react leading to fire. If Batteries are deformed by pressure or impact, sealing may be damaged leading to leakage or internal insulation may be damaged leading to internal short circuit. Internal short circuit will result in heat generation that may lead to rupture or fire.

Tyre changing tool (if equipped)

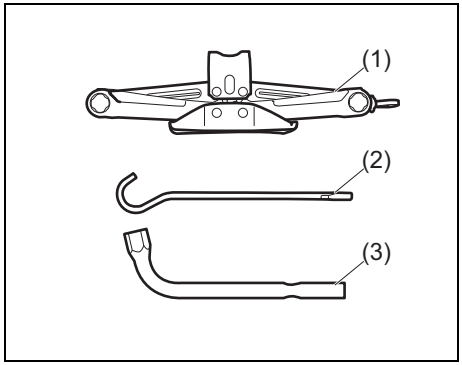

52RM80010

(1) Jack
(2) Jack handle
(3) Wheel wrench

The tyre changing tools are stowed in the luggage compartment.
Refer to “Luggage compartment” (P.1-7).

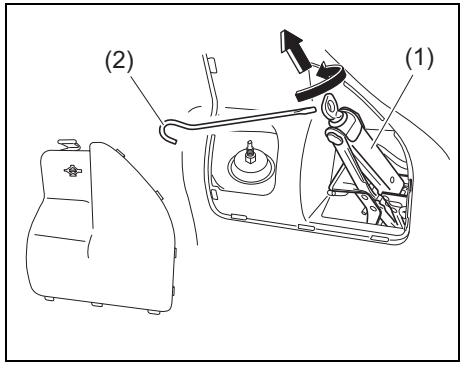

52RM80040

To remove the jack (1), turn its shaft counterclockwise by using jack handle (2) and pull the jack out of the storage bracket.

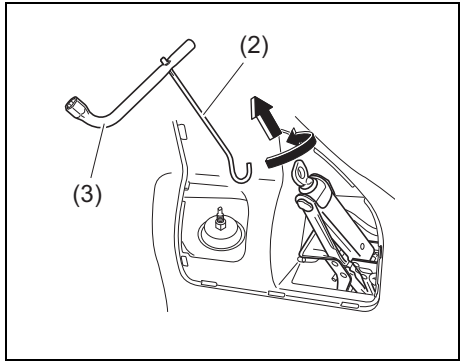

52RM80040

NOTE:
If you are difficult to use the jack handle (2), use jack handle and wheel wrench (3) as shown in the illustration.

To stow the jack, place it in the storage bracket and turn the shaft clockwise until the jack is securely held in place.

⚠ WARNING

After using the tyre changing tools, stow them securely or they can cause injury if an accident occurs.

⚠ CAUTION

The jack should be used only to change wheels. It is important to read the jacking instructions in this section before attempting to use the jack.

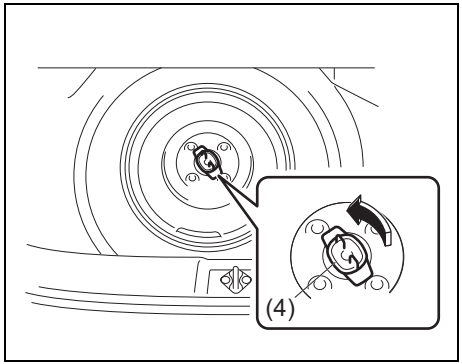

68PM20801

To remove the spare tyre (if equipped), turn its bolt (4) counterclockwise and remove it.

Jacking instructions

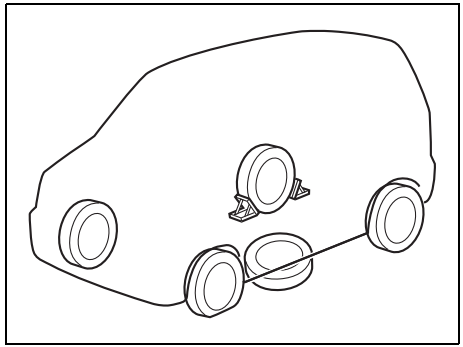

69T100140

1) Place the vehicle on level, hard ground.
2) Set the parking brake firmly and shift into “P” (Park) if your vehicle has a CVT, or shift into “R” (Reverse) if your vehicle has a manual transmission.

⚠ WARNING

- **Shift into “P” (Park) for a CVT, or into “R” (Reverse) for a manual transmission vehicle when you jack up the vehicle.**
- **Never jack up the vehicle with the transmission in “N” (Neutral). Otherwise, unstable jack may cause an accident.**

3) Turn on the hazard warning switch if your vehicle is near traffic.
4) Block the front and rear of the wheel diagonally opposite of the wheel being lifted.
5) Place the spare tyre (if equipped) near the wheel being lifted as shown in the illustration in case the jack (if equipped) slips.

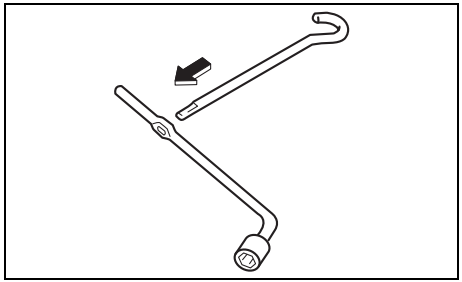

59RN10120

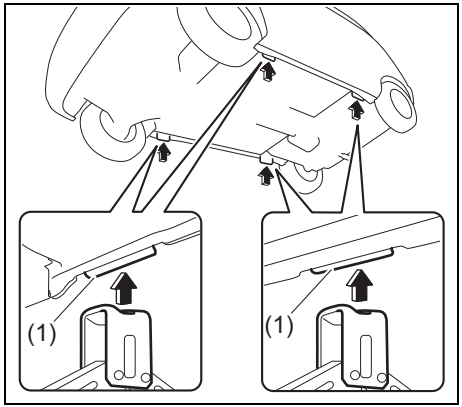

59R80200

6) Position the jack (if equipped) at an angle as shown in the illustration and raise the jack by turning the jack handle (if equipped) clockwise until the jack-head groove fits around the jacking bar beneath the vehicle body

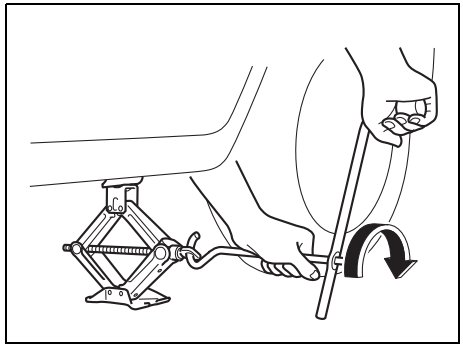

81PN117

7) Continue to raise the jack (if equipped) slowly and smoothly until the tyre clears the ground. Do not raise the vehicle more than necessary.

⚠ WARNING

- **Use the jack only to change wheels on level, hard ground.**
- **Never jack up the vehicle on an inclined surface.**
- **Never raise the vehicle with the jack in a location other than the specified jacking point (shown in the illustration) near the wheel to be changed.**
- **Check that the jack is raised at least 25 mm (1 inch) before it contacts the flange. Use of the jack when it is within 25 mm (1 inch) of being fully collapsed may result in failure of the jack.**
- **Never get under the vehicle when it is supported by the jack.**
- **Never run the engine when the vehicle is supported by the jack. If there are passengers or heavy luggage, get them out of the vehicle.**

Raising vehicle with garage jack

- Apply the garage jack (commercially available) to one of the points indicated below.
- Always support the raised vehicle with jack stands (commercially available) at the points indicated below.

(1) Front
(2) Rear
(3) Jack stand
(4) Garage jack
(5) Jacking point for garage jack

⚠ WARNING

As the vehicle may get damaged or an accident may occur, observe the following points.

- **Observe the designated points shown in the illustration.**
- **When holding the lifted vehicle, use the jack stand.**
- **When jacking up the front side or the rear side only, put a chock (commercially available) on front and back of the grounded tyre.**

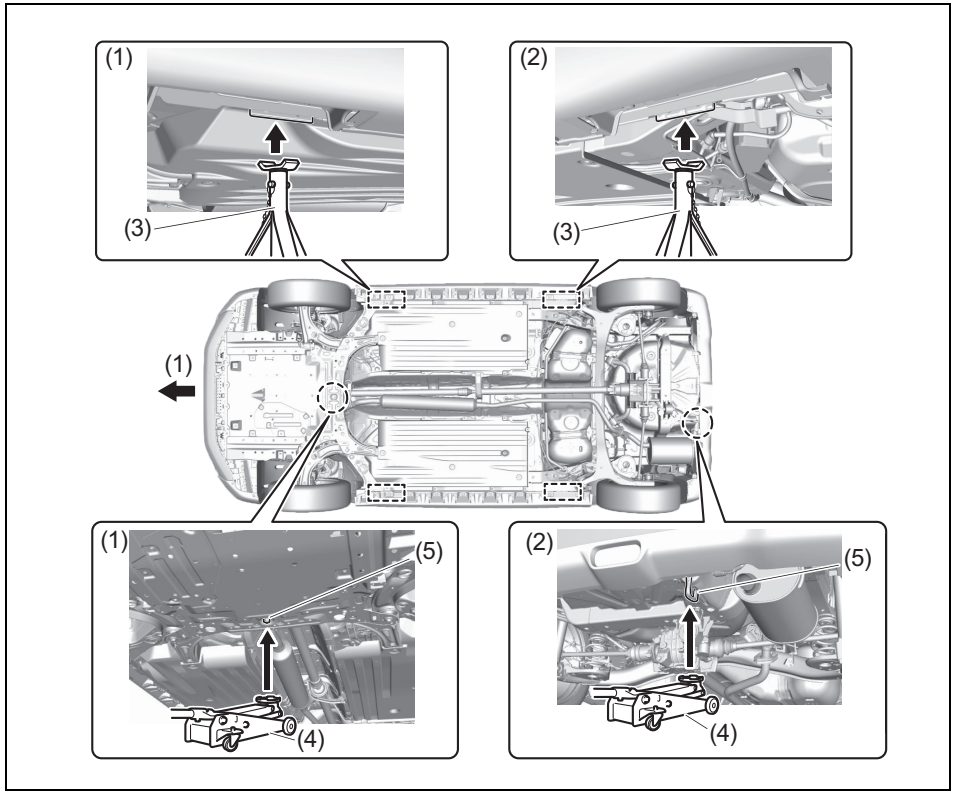

69T100060

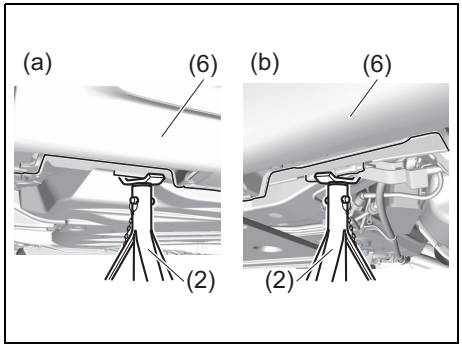

69T100070

(a) Specified position of jack stand for the front side
(b) Specified position of jack stand for the rear side

NOTICE

If you use the jack stand (2) in the condition that it touches the side skirt (6), the side skirt may be broken or damaged.
When using the jack stand, make sure that it does not touch the side skirt.

NOTE:
For more details, contact an authorized SUZUKI dealer or a qualified workshop.

Changing wheels

To change a wheel, use the following procedure:
1) Prepare the jack (if equipped), tools and spare tyre (if equipped).
2) Loosen, but do not remove the wheel nuts.
3) Jack up the vehicle (follow the jacking instructions in this section).

⚠ WARNING

- **Shift into "P" (Park) for a CVT, or into "R" (Reverse) for a manual transmission vehicle when you jack up the vehicle.**
- **Never jack up the vehicle with the transmission in "N" (Neutral). Otherwise, unstable jack may cause an accident.**

⚠ CAUTION

Immediately after the vehicle has been driven, the wheels, the wheel nuts and the area around the brakes might be extremely hot. Touching these areas may cause burn injury. Do not touch these areas, immediately after the vehicle has been driven.

4) Remove the wheel nuts and wheel.

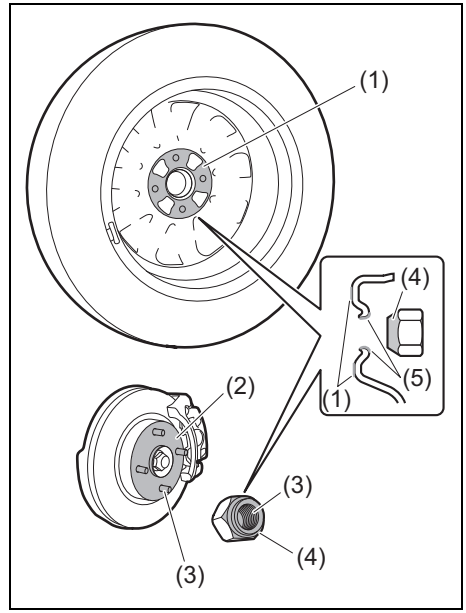

84S08170

5) Clean any mud or dirt off from the surface of the wheel (1), hub (2), thread part (3), surface of the wheel nuts (4) and surface of the wheel holes (5) with a clean cloth.
Clean the hub carefully; it may be hot from driving.

6) Install the new wheel and replace the wheel nuts with their cone shaped end facing the wheel. Tighten each nut snugly by hand until the wheel is securely seated on the hub.

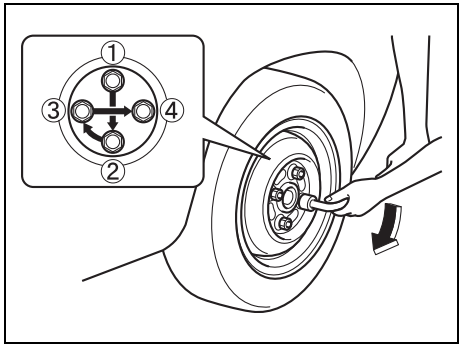

82K132

Tightening torque for wheel nut
100 Nm (10.2 kg-m, 74.0 lb-ft)

7) Lower the jack and fully tighten the nuts with a wheel wrench (if equipped) in numerical order as shown in the illustration.

⚠ WARNING

Use genuine wheel nuts and tighten them to the specified torque as soon as possible after changing wheels. Incorrect wheel nuts or improperly tightened wheel nuts may come loose or fall off, which can result in an accident. If you do not have a torque wrench, have the wheel nut torque checked by an authorized SUZUKI dealer or a qualified workshop.

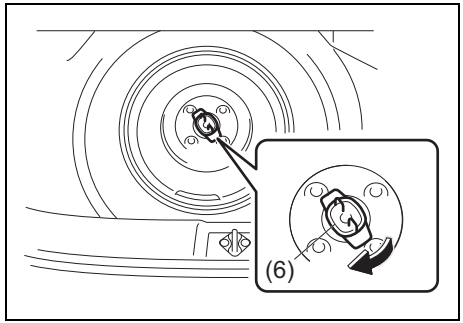

69T100080

Return the spare tyre (if equipped) back into the luggage compartment in the reverse order of removal and tighten its bolt (6) clockwise as shown in the above illustration.

NOTICE

Make sure that the spare tyre is fixed securely on the floor. Loosely fixed tyre may cause noise during driving and damage paint on vehicle body.

Full wheel cover (if equipped)

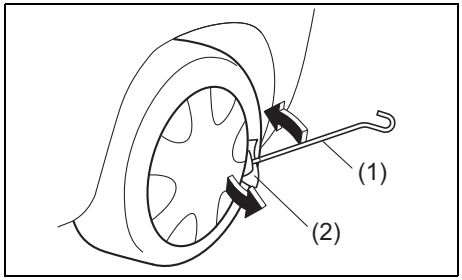

52RM80080

Remove the full wheel cover by using jack handle (1) (if equipped) or flat-bladed screwdriver, etc. covered with a soft cloth (2), as shown in the illustration.

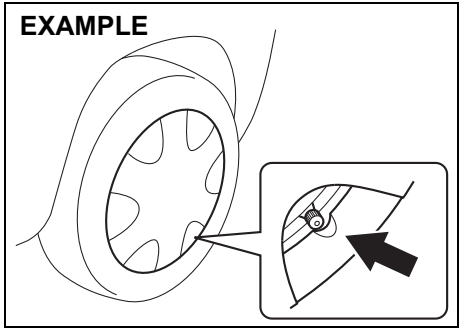

52RM80090

Install the full wheel cover not to cover or foul the air valve.

Flat tyre repair kit (if equipped)

The flat tyre repair kit is stowed in the luggage compartment.
Refer to “Luggage compartment” (P.1-7).

⚠ WARNING

Failure to follow the instructions in this section for using the flat tyre repair kit can result in an increased risk of loss of control and an accident.
Carefully read and follow the instructions in this section.

NOTICE

The flat tyre repair kit cannot be used in the following cases. Consult an authorized SUZUKI dealer, a qualified workshop or a roadside assistance service.

- **Cuts or piercing in the tyre tread larger than approx. 4 mm (0.15 in.).**
- **Cuts in the tyre side wall.**
- **Tyre damage caused by driving with considerably reduced tyre pressure or even with deflated tyre.**
- **The tyre bead completely unseated outside of the rim.**
- **Rim damage.**

Small punctures in the tyre tread, caused by a nail or a screw, can be sealed with the flat tyre repair kit.
Do not remove nails or screws from the tyre during an emergency repair.

Flat tyre repair kit contents

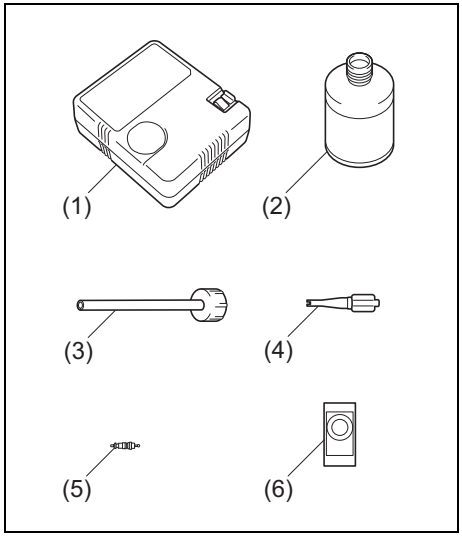

81P70030

(1) Air compressor
(2) Sealant bottle
(3) Filler hose
(4) Valve insert remover
(5) Valve insert (spare)
(6) Speed restriction sticker

⚠ WARNING

The flat tyre repair kit sealant is harmful if swallowed, or it comes in contact with skin or eyes. If swallowed, do not induce vomiting. Give plenty of water (if possible charcoal slurry) and seek medical attention immediately. If sealant gets in eyes, flush eyes with water and seek medical attention. Wash thoroughly after handling. Solution can be poisonous to animals. Keep out of the reach of children and animals.

NOTICE

Be sure to replace the sealant before expiry date indicated on the label of the sealant bottle. To purchase new sealant, see your an authorized SUZUKI dealer or a qualified workshop.

How to perform an emergency repair

1) Place the vehicle on level, hard ground. Set the parking brake firmly and shift into “R” (Reverse) if your vehicle has a manual transmission, or shift into “P” (Park) if your vehicle has a CVT.
   Turn on the hazard warning flasher if your vehicle is near traffic.
   Block the front and rear of the wheel diagonally opposite of the wheel being repaired.

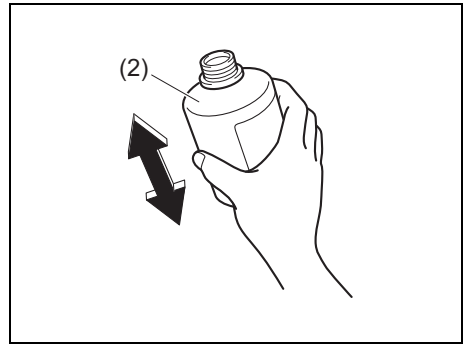

59RN10050

2) Take out the sealant bottle (2) and the compressor, and shake the bottle well.

NOTE:
Shake the bottle well before screwing the filler hose onto the bottle.

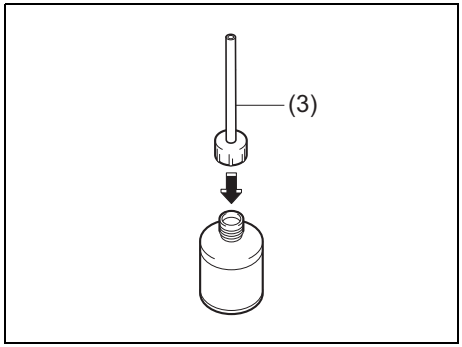

81PN118

3) Screw the filler hose (3) onto the bottle, thereby piercing the inner cap of the bottle.

NOTE:
Screw the filler hose without removing the inner cap of the bottle.

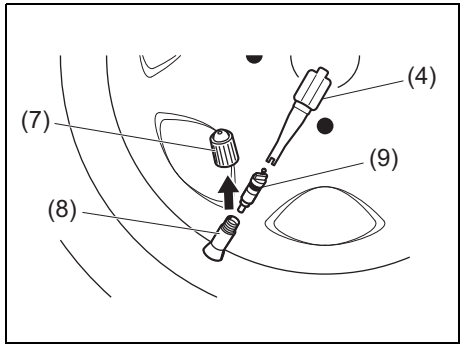

81PN153

4) Unscrew the valve cap (7) from the tyre valve (8). Unscrew the valve insert (9) by using the enclosed valve insert remover (4). Place the valve insert (9) onto clean place for re-use.

⚠ WARNING

The valve insert can jump out, if air remains in the tyre. Be careful when removing the valve insert.

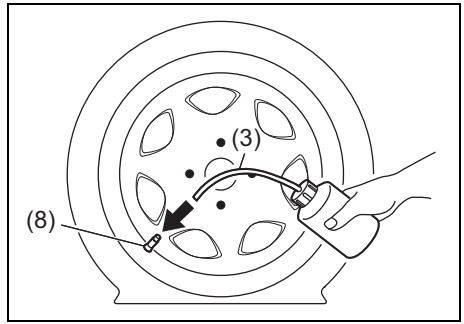

81PN248

5) Remove the plug from the filler hose (3) and insert the filler hose into the tyre valve (8).

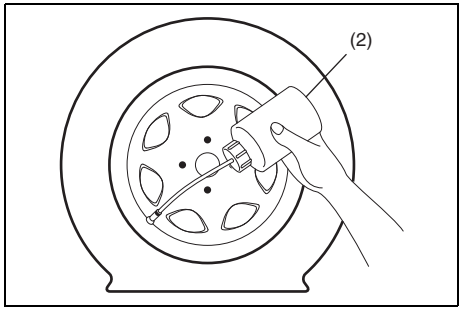

63J349

6) Hold the bottle (2) with bottom upwards and pump the bottle to fill the entire bottle contents (sealant) into the tyre. Thereafter pull off the filler hose and firmly screw the valve insert into the tyre valve again. If the valve insert is dirty or lost, use the enclosed spare valve insert.

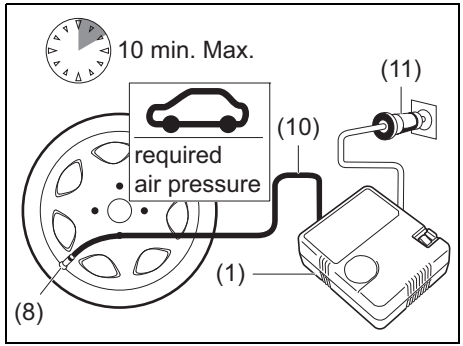

81PN120

7) Screw the air hose (10) of the compressor (1) to the tyre valve (8). Fit the power plug (11) to the accessory socket. Start the engine. Switch on the compressor. Inflate the tyre to the required air pressure.

⚠ WARNING

Do not stand by the tyre, when inflating. It can burst.

NOTICE

Do not operate the compressor for longer 10 minutes without cease. It can cause overheating of the compressor.

If the air pressure still cannot be reached the required air pressure, the tyre may be severely damaged. In this case, the flat tyre repair kit cannot provide the necessary seal. Consult an authorized SUZUKI dealer or a qualified workshop or a roadside assistance service.

NOTE:
If over inflated, deflate air by loosening the screw of the air hose.

8) Make a short drive immediately after inflating to the required air pressure. Drive carefully with a maximum speed of 80 km/h (50 mph).

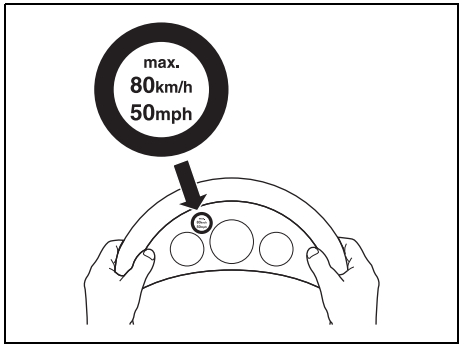

81PN249

9) Affix the enclosed speed restriction label in the driver's field of view, and carry on driving carefully to the nearest an authorized SUZUKI dealer or a qualified workshop or a tyre repair shop.

⚠ WARNING

Do not affix the speed restriction label to the airbag cover. Also do not affix it to the warning light indicator or to the speedometer.

10) After 5 km (3 miles) or 10-minute running, check the tyre pressure with the pressure gauge of the compressor. If the air pressure indicates more than 130 kPa (1.3 bar), the emergency repair is completed. But, if the air pressure indicates less than the required air pressure, correct the tyre pressure to the required air pressure. If the tyre pressure has dropped below 130 kPa (1.3 bar), the flat tyre repair kit cannot provide the necessary seal. Do not use the tyre and consult an authorized SUZUKI dealer or a qualified workshop or a roadside assistance service.

⚠ WARNING

Check the tyre pressure and confirm the completion of the emergency repair after 5 km (3 miles) or 10-minute of running.

NOTICE

Have the tyre renewed at the nearest an authorized SUZUKI dealer or a qualified workshop. When reusing the sealed tyre, consult a tyre repair shop.
The wheel can be reused after wiping sealant off completely with cloth in order to prevent rust, but the tyre valve and tyre pressure monitoring system (TPMS) sensor (if equipped) must be renewed.
Dispose of the sealant bottle at an authorized SUZUKI dealer or a qualified workshop or in accordance with your regional codes and practices.
After using the sealant bottle, replace it with a new bottle from your an authorized SUZUKI dealer or a qualified workshop.

Using compressor to inflate a tyre

1) Place the vehicle on level, hard ground. Set the parking brake firmly and shift into "P" (Park) if your vehicle has a CVT, or shift into "R" (Reverse) if your vehicle has a manual transmission.
2) Take out the compressor.
3) Unscrew the valve cap from the tyre valve.
4) Connect the air hose of the compressor to the tyre valve.
5) Connect the power plug of the compressor to the accessory socket. For a manual transmission vehicle, shift from "R" (Reverse) into "N" (Neutral). Start the engine. Switch on the compressor. Inflate the tyre to the required air pressure.

NOTICE

Do not operate the compressor for longer than 10 minutes. It can cause overheating of the compressor.

Jump-starting instructions

⚠ WARNING

- **Never attempt to jump-start your vehicle if the lead-acid battery appears to be frozen. Batteries in this condition may explode.**
- **When making jump lead connections, check that your hands and the jump leads remain clear from pulleys, belts or fans.**
- **Lead-acid batteries produce flammable hydrogen gas. Keep flames and sparks away from the battery or an explosion may occur. Never smoke when working near the battery.**
- **If the booster battery you use for jump-starting is installed in another vehicle, check that the two vehicles are not touching each other.**
- **If your lead-acid battery discharges repeatedly, for no apparent reason, have your vehicle inspected by an authorized SUZUKI dealer or a qualified workshop.**
- **To avoid harm to yourself or damage to your vehicle or battery, follow the jump-starting instructions below.**
  If you are in doubt, call for qualified road service.

NOTICE

Your vehicle should not be started by pushing or towing. This starting method could result in permanent damage to the catalytic converter. Use jump leads to start a vehicle with a weak or flat battery.

1) Use only a 12-volt lead-acid battery to jump-start your vehicle. Position the good 12-volt lead-acid battery close to your vehicle so that the jump leads will reach both batteries. When using a battery installed on another vehicle, check that two vehicles do not touch each other. Set the parking brakes fully on both vehicles.
2) Turn off all vehicle accessories, except those necessary for safety reasons (for example, headlights or hazard lights).

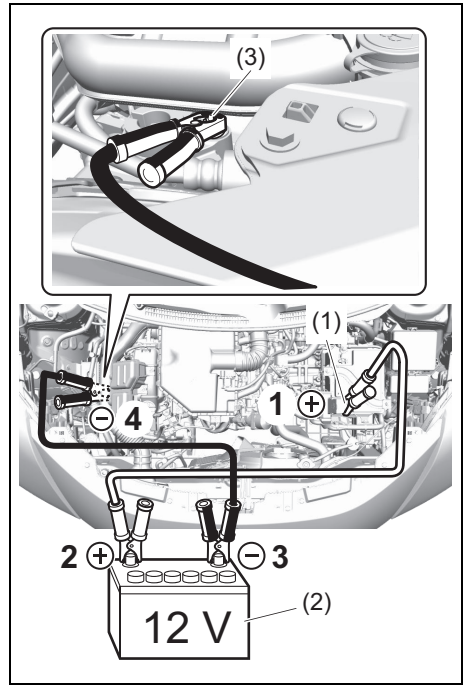

69T100090

3) Connect jump leads as follows:
   1. Connect one end of the first jump lead to the positive (+) terminal of the discharged battery (1).
   2. Connect the other end to the positive (+) terminal of the booster battery (2).

3. Connect one end of the second jump lead to the negative (–) terminal of the booster battery (2).
4. Make the final connection to an unpainted, heavy metal part (i.e. engine mount bolt (3)) of engine cylinder head in the vehicle with the discharged battery (1).

⚠ WARNING

Never connect the jump lead directly to the negative (–) terminal of the discharged battery, or an explosion may occur.

⚠ CAUTION

Connect the jump lead to the engine mount bolt securely. If the jump lead disconnects from the engine mount bolt because of vibration at the start of the engine, the jump lead could be caught in the drive belts.

4) If the booster battery you are using is fitted to another vehicle, start the engine of the vehicle with the booster battery. Run the engine at moderate speed.
5) Start the engine of the vehicle with the discharged battery.
6) Remove the jump leads in the exact reverse order in which you connected them.

Running out of battery

In the following cases, the lead-acid battery is running out.

- The starter does not engage when attempting to turn on the engine. Or, the starter rotation is too weak to make the engine start.
- The headlight illumination is extremely low or the horn volume is low.

If you get a flat tyre while driving

Firmly hold the steering wheel and carefully apply the brakes to slow down the vehicle and stop it in a safe place.

Engine trouble: Starter does not operate

1) Try pressing the engine switch to change the ignition mode to START with the headlights turned on to determine the lead-acid battery condition. If the headlights go excessively dim or go off, it usually means that either the lead-acid battery is discharged or the battery terminal contact is poor. Recharge the lead-acid battery or correct battery terminal contact as necessary.
2) If the headlights remain bright, check the fuses. If the reason for failure of the starter is not obvious, there may be a major electrical problem. Have the vehicle inspected by an authorized SUZUKI dealer or a qualified workshop.

Engine trouble: Does not start

Make sure that your vehicle has enough fuel and battery.
If the engine does not start under very cold condition, press the accelerator pedal all the way to the floor and hold it while cranking the engine.
Refer to “Starting engine” in the (P.5-13).
If the engine still does not start have your vehicle inspected at an authorized SUZUKI dealer or a qualified workshop.

- Do not operate the starter motor for more than 12 seconds.

NOTE:
If the engine refuses to start, the starter motor automatically stops after a certain period of time. After the starter motor has automatically stopped or if there is anything abnormal in the engine starting system, the starter motor runs only while the engine switch is held pressed.

Engine trouble: Overheating

The engine could overheat temporarily under severe driving conditions. If the high engine coolant temperature warning light comes on as overheating or the engine coolant temperature gauge indicates overheating during driving:

1) Turn off the air conditioner.
2) Take the vehicle to a safe place and park.
3) Run the engine at a normal idle speed for a few minutes until the high engine coolant temperature warning light goes off or the indicator is within the normal, acceptable temperature range between “H” and “C”.

⚠ WARNING

If you see or hear escaping steam, stop the vehicle in a safe place and immediately turn off the engine to cool it. Do not open the hood when steam is present. When the steam can no longer be seen or heard, open the hood to see if the coolant is still boiling. If it is, you must wait until it stops boiling before you proceed.

If the high engine coolant temperature warning light does not go off or the temperature indication does not come down to within the normal, acceptable range:

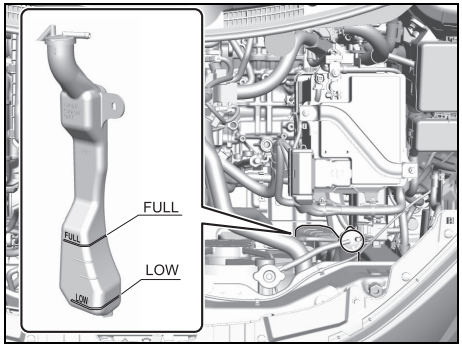

69T090020

1) Check the coolant level in the reservoir. If it is found to be lower than “LOW” line, check radiator, water pump, radiator hoses and heater hoses for leakage. If leakage that may cause overheating is found, do not run the engine until these problems have been corrected.
2) If leakage is not found, carefully add coolant to the reservoir and then the radiator, if necessary. (Refer to “Engine coolant” (P.9-25).)

NOTE:
If engine overheats and you are not sure what to do, contact an authorized SUZUKI dealer or a qualified workshop.

⚠ WARNING

79J007

- **It is hazardous to remove the radiator cap when the water temperature is high, because scalding fluid and steam may be blown out under pressure. The cap should only be taken off when the coolant temperature has lowered.**
- **To help prevent personal injury, keep hands, tools and clothing away from the cooling fan (radiator fan). The cooling fan (radiator fan) can automatically turn on without warning.**

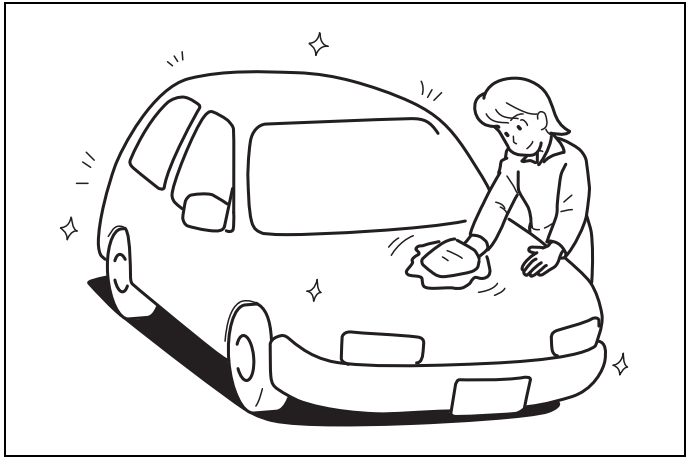

60G412

APPEARANCE CARE

Corrosion prevention 11-1
Cleaning exterior 11-2
Cleaning interior 11-6

Corrosion prevention

It is important to take good care of your vehicle to protect it from corrosion. Listed below are instructions for how to maintain your vehicle to prevent corrosion. Please read and follow these instructions carefully.

Important information about corrosion

Common causes of corrosion

1) Accumulation of road salt, dirt, moisture or chemicals in hard-to-reach areas of the vehicle underbody or frame.
2) Chipping, scratches and any damage to treated or painted metal surfaces resulting from minor accidents or abrasion by stones and gravel.

Environmental conditions which accelerate corrosion

1) Road salt, dust control chemicals, sea breeze or industrial pollution will all accelerate the corrosion of metal.
2) High humidity will increase the rate of corrosion particularly when the temperature range is just above the freezing point.
3) Moisture in certain areas of a vehicle for an extended period of time may promote corrosion even when other body sections are completely dry.
4) High temperatures will cause an accelerated rate of corrosion to parts of the vehicle which are not well-ventilated to permit quick drying.

This information illustrates the necessity of keeping your vehicle (particularly the underbody) as clean and dry as possible. It is equally important to repair any damage to the paint or protective coatings as soon as possible.

How to help prevent corrosion

Wash your vehicle frequently

The best way to preserve the finish on your vehicle and to help avoid corrosion is to keep it clean with frequent washing.
Wash your vehicle at least once during the winter and once immediately after the winter. Keep your vehicle, particularly the underside, as clean and dry as possible.
If you frequently drive on salted roads, your vehicle should be washed at least once a month during the winter. If you live near the ocean, your vehicle should be washed at least once a month throughout the year.

For washing instructions, refer to “Cleaning exterior” (P.11-2).

Remove foreign material deposits

Foreign materials such as salts, chemicals, road oil or tar, tree sap, bird droppings and industrial fall-out may damage the finish of your vehicle if it is left on painted surfaces. Remove these types of deposits as quickly as possible. If these deposits are difficult to wash off, an additional cleaner may be required. Check that any cleaner you use is not harmful to painted surfaces and is specifically intended for your purposes. Follow the manufacturer’s directions when using these special cleaners.

Repair finish damage

Carefully examine your vehicle for damage to the painted surfaces. Should you find any chips or scratches in the paint, touch them up immediately to prevent corrosion from starting. If the chips or scratches have gone through to the bare metal, have a qualified body shop make the repair.

Keep passenger and luggage compartments clean
Moisture, dirt or mud can accumulate under the floor mats and may cause corrosion. Occasionally, check under these mats to ensure that this area is clean and dry. More frequent checks are necessary if the vehicle is used for off-road driving or in wet weather.
Certain cargos such as chemicals, fertilizers, cleaners, salts, etc. are extremely corrosive by nature. These products should be transported in sealed containers. If they are spilled or leaked, clean and dry the area immediately.

Park your vehicle in a dry, well-ventilated area
Do not park your vehicle in a damp, poorly-ventilated area. If you often wash your vehicle in the garage and place it there in wet condition, your garage may be damp. The high humidity in the garage may cause or accelerate corrosion. A wet vehicle may corrode even in a heated garage if the ventilation is poor.

⚠ WARNING

Do not apply additional undercoating or rust preventive coating on or around exhaust system components such as the catalytic converter and the exhaust pipes. It may catch a fire if the undercoating substance becomes overheated.

Cleaning exterior

For keeping the paintwork beautiful

To keep your vehicle's beautiful appearance for a long term, daily care is important.

- For parking and storing the vehicle, we recommend garages with good ventilation and locations with roofs.
- The following situations may cause rusting and discoloration of the paint. Wash your vehicle promptly.
  - When driving in coastal areas or on roads sprayed with antifreeze agent (Wash the underside of the vehicle and around the wheel wells especially)
  - When bird droppings, dead insects, sap, iron dust, soot or smoke residue, coal tar, etc., adhere to the paint or when the vehicle gets wet with acid rain
  - When the vehicle is dirty with dust or mud
- Give the vehicle a wax about once a month or whenever the water-repelling ability of the painted surfaces has declined. Follow all instructions on the package of the wax (sold separately).

NOTE:
Do not use wax on plastic parts that are not coated. Waxing these surfaces could result in a whitened or uneven appearance.

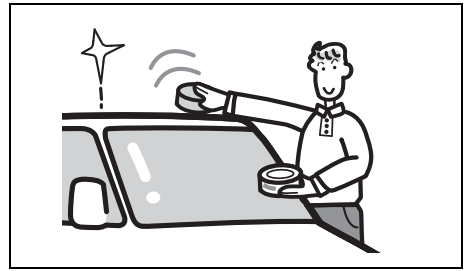

80J302

- Chips from flying rocks, scratches, etc. can cause rust. Repair these areas as soon as possible.

NOTICE

- **When repairing scratches on painted surfaces, consult an authorized SUZUKI dealer or a qualified workshop. Using an inappropriate material for repair could cause damage to the paint.**
- **It is important that your vehicle be kept clean and free from dirt. Failure to keep your vehicle clean may result in fading of the paint or corrosion to various parts of the vehicle body.**

Precaution for car wash

⚠ CAUTION

- **Never attempt to wash and wax your vehicle with the engine running.**
- **When cleaning the underside of the body and fender, where there may be sharp-edged parts, wear gloves and a long-sleeved shirt to protect your hands and arms from being cut.**
- **After washing your vehicle, carefully test the brakes before driving to check that they have maintained their normal effectiveness.**

NOTICE

- **If water contacts the engine compartment, it may cause the engine malfunction or the electrical components to fail.**
  Do not apply water to the engine compartment when washing the vehicle.

84S09240

- **When washing or waxing the vehicle, do not lean on the vehicle body or do not push it hard.**
  This might cause it to deform.

Washing by hand

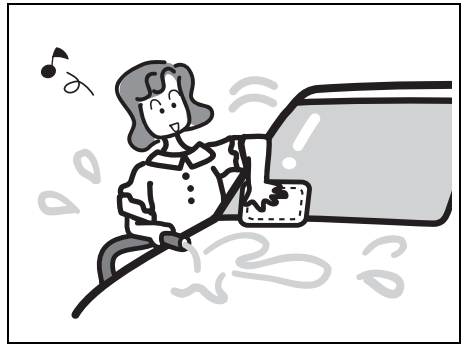

80J303

When washing the vehicle, park it in the place where direct sunlight does not fall on it as much as possible and follow the instructions below:

1) Flush the underside of body and wheel housings with pressurized water to remove mud and debris. Use plenty of water.

NOTICE

When washing the vehicle:

- **Avoid directing steam or hot water of more than 80°C (176°F) on plastic parts.**

2) Rinse the body to loosen the dirt. Remove dirt and mud from the body exterior with running water. You may use a soft sponge or brush. Do not use hard materials which can scratch the paint or plastic. Remember that the headlight covers or lenses are made of plastic in many cases.

NOTICE

To avoid damage to the paint or plastic surface, do not wipe the dirt off without ample water. Follow the above procedure.

3) Wash the entire exterior with a mild detergent or car wash soap using a sponge or soft cloth. The sponge or cloth should be frequently soaked in the soap solution.

NOTICE

When using a commercial car wash product, observe the cautions specified by the manufacturer. Never use strong household detergents or soaps.

4) Once the dirt has been completely removed, rinse off the detergent with running water.
5) Wipe off the vehicle body with a wet chamois or cloth and allow it to dry in the shade.
6) Check carefully for damage to painted surfaces. If there is any damage, touch up the damage following the procedure below:
   1. Clean all damaged spots and allow them to dry.
   2. Stir the paint and touch up the damaged spots lightly using a small brush.
   3. Allow the paint to dry completely.

Washing by an automatic car wash

NOTICE

- **If you use an automatic car wash, check that your vehicle's body parts, such as antenna and outside rearview mirror, cannot be damaged. If you are in doubt, consult the car wash operator for advice.**
- **Do not wash a car with a roof end spoiler in an automatic car wash. It may get caught in the car wash and damage the spoiler.**

Washing by a high-pressure cleaner

NOTICE

If you use a high-pressure cleaner, keep away the nozzle from your vehicle sufficiently.

- **Bringing the nozzle to your vehicle too close or pointing the nozzle to the opening of front grill or bumper etc. can cause damage and malfunction of the vehicle body and parts.**
- **Pointing the nozzle to door glasses and door frames can allow water to enter the cabin.**

Caring for the windshield

If an oil film, etc. adheres to the windshield and the windshield wipers cannot clean it, use a glass cleaner (sold separately) to clean the windshield by hand.

Caring for auminum wheels

NOTE:
- *Do not use an acidic or alkaline detergent, or a cleaner containing petroleum solvent to wash aluminum wheels. These types of cleaners will cause permanent spots, discoloration and cracks on the finished surface and damage to the center cap.*
- *Do not use a bristle brush and a soap containing an abrasive material. These will damage the finished surface.*

Caring for lights

Wash the lens part of light and wipe it off with a soft cloth.

NOTICE

- **Do not use the detergent including organic solvent on the lens surface of the light. The lens surface may be cracked.**
  If you use the detergent including organic solvent, rinse it off with ample water.
- **Do not wipe the lens surface by wax or a hard brush. This may damage the lens or hasten its deterioration.**

Caring for cameras

Wash the lens part of camera and wipe it off with a soft cloth. If the lens part is very dirty, use a mild detergent.

NOTICE

- **Using alcohol, benzine, thinner etc. to wipe the camera may cause discoloration.**
  When you wipe the camera, do not use alcohol, benzine, thinner etc.
- **Hard coating is used for the lens of camera not to be easily scratched. However, if you use the brush for a vehicle, it may be difficult for you to see the image on the rearview camera.**
  Be very careful not to scratch the lens.

Waxing

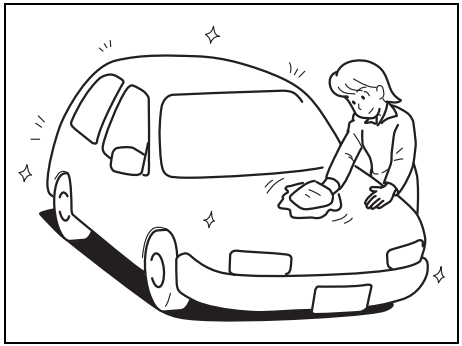

60G412

After washing the vehicle, waxing and polishing are recommended to further protect and beautify the paint.

- Only use waxes and polishes of good quality.
- When using waxes and polishes, observe the precautions specified by the manufacturers.

Cleaning interior

- Clean out any dirt, sand, etc. using a vacuum cleaner, or wipe off the surfaces using a soft cloth moistened with cold or lukewarm water. If the interior is left dirty, scratches can occur.
- Quickly clean off any liquids such as those from air fresheners or spilled beverages by using tissue paper or a soft cloth. Leaving spilled liquids can cause staining, discoloration or cracking.

⚠ WARNING

- **Do not spray the interior with water or other liquids. If the navigation equipment, audio components, switches, wiring under the floor, or other electrical parts become wet, there is a risk of fire or malfunction, and the SRS airbag system could fail to function normally.**
- **If you pour water or spill a drink in the vehicle, consult an authorized Suzuki dealer or a qualified workshop as soon as possible for inspection.**

NOTICE

- **Do not use chemical products containing the following ingredients. Doing so may cause staining, discoloration, deformation, or a deterioration in strength, etc.**
  - **Solvents such as benzine, gasoline, thinner, or sticker peeling agents**
  - **Acidic or alkaline detergents**
  - **Bleaches or dyes**
- **Do not use chemical products that include silicone for cleaning the areas around the air conditioner, electronic equipment such as the audio or navigation systems or switches. Contact with silicone may cause them to malfunction.**
- **Do not leave colored leather goods, furs, vinyl articles, etc. in your vehicle for long periods. Doing so could cause discoloration or deformation of the interior.**

NOTE:
To prevent liquid-based air fresheners from spilling, it is recommended to fix their containers in place, or use solid-type air fresheners instead.

Vinyl upholstery

Prepare a solution of soap or mild detergent dissolved in warm water. Apply the solution to the vinyl with a sponge or soft cloth and let it soak for a few minutes to loosen dirt.
Rub the surface with a clean, damp cloth to remove dirt and the soap solution. If some dirt still remains on the surface, repeat this procedure.

Fabric upholstery

Remove loose dirt with a vacuum cleaner. Using a mild soap solution, rub stained areas with a clean damp cloth. To remove soap, rub the areas again with a cloth dampened with water. Repeat this until the stain is removed, or use a commercial fabric cleaner for tougher stains. If you use a fabric cleaner, carefully follow the manufacturer's instructions and precautions.

Leather upholstery

Remove loose dirt with a vacuum cleaner. Using a mild soap or saddle soap solution, wipe dirt off with a clean damp soft cloth. To remove soap, wipe the areas again with a soft cloth dampened with water. Wipe the areas dry with a soft dry cloth. Repeat this until the dirt or stain is removed, or use a commercial leather cleaner for tougher dirt or stains. If you use a leather cleaner, carefully follow the manufacturer's instructions and precautions. Do not use solvent type cleaners or abrasive cleaners.

NOTE:
- *In order to keep the leather upholstery looking good, it should be cleaned at least twice a year.*
- *If the leather upholstery becomes wet, immediately wipe it dry with a tissue paper or a soft cloth. Water may cause the leather to harden and shrink if it is not wiped off.*
- *When parking on sunny days, select a shady place or use a sunshade. If the leather upholstery is exposed to the direct sunlight for a long time, it may discolor and shrink.*
- *As is common with natural materials, leather is inherently irregular in grain and cowhide has spots in its natural state. These do not affect the performance of the leather in any way.*

Seat belts

Clean seat belts with mild soap and water. Do not use bleach or dye on the belts. They may weaken the fabric of the belts.

Vinyl floor mats

Ordinary dirt can be removed from vinyl with water or the mild soap. Use a brush to help loosen dirt. After the dirt is loosened, rinse the mat thoroughly with water and dry it in the shade.

Carpets

Remove the dirt and soil as much as possible with a vacuum cleaner. Using a mild soap solution, rub stained areas with a clean damp cloth. To remove soap, rub the areas again with a cloth dampened with water. Repeat this until the stain is removed, or use a commercial carpet cleaner for tougher stains. If you use a carpet cleaner, carefully follow the manufacturer's instructions and precautions.

Instrument panel and console

Remove loose dirt with a vacuum cleaner. Gently wipe dirt off with a tightly squeezed damp clean cloth. Repeat this until the dirt is removed.

NOTICE

- **Do not use chemical products that contain silicon to wipe electrical components such as the air conditioning system, audio, navigation system, or other switches. These will cause damage to the components.**
- **Liquids such as liquid aromatics, soft drinks or juice may cause discoloration, wrinkles, and cracking to resin-based parts and textiles. Immediately wipe it dry with tissue paper or a soft cloth.**
- **Do not leave leather products with color, fur or vinyl products, etc. in your vehicle for long periods. It may cause discoloration or deterioration of interior.**

MEMO

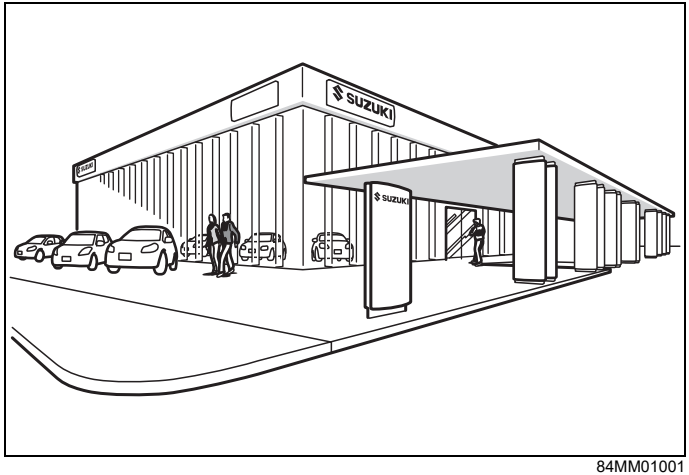

84MM01001

SPECIFICATIONS

Vehicle identification **12-1**
Fuel recommendation **12-2**
Specifications **12-3**
Setting mode of information display **12-8**

Vehicle identification

Chassis serial number

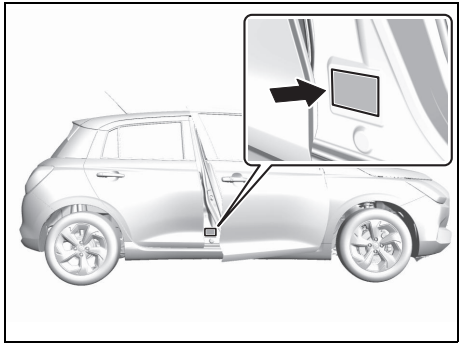

69T120040

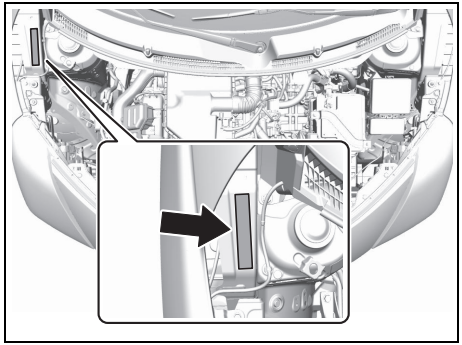

69T120050

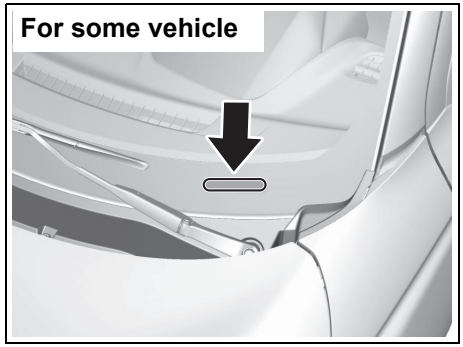

69T120110

The chassis and/or engine serial numbers are used to register the vehicle. They are also used to assist an authorized SUZUKI dealer or a qualified workshop when ordering or referring to special service information. Whenever you have occasion to consult an authorized SUZUKI dealer or a qualified workshop, remember to identify your vehicle with this number. Should you find the number difficult to read, you will also find it on the identification plate.

Engine serial number

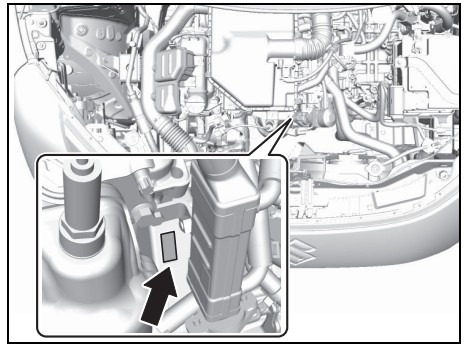

69T120070

The engine serial number is stamped on the cylinder block as shown in the illustration.

Fuel recommendation

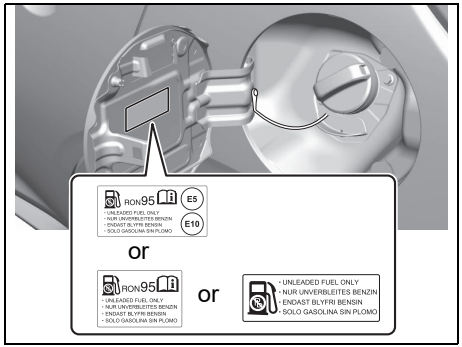

69T120080

To avoid damaging catalytic converter, you **must** use unleaded gasoline with an octane number (RON) of 95 or higher (or 95 or higher if it is stated on the fuel filler lid), which complies with the European standard EN228. This is identified by a label attached on fuel lid that states: “UNLEADED FUEL ONLY”, “NUR UNVERBLEITES BENZIN”, “ENDAST BLYFRI BENSIN” or “SOLO GASOLINA SIN PLOMO”.

9Gasoline-ethanol blends

Blends of unleaded gasoline and ethanol (grain alcohol), also known as gasohol, are commercially available in certain areas. Blends of this type may be used in your vehicle if they are no more than 10% ethanol. Check that this gasoline-ethanol blend has octane ratings no lower than those recommended for the gasoline.

Use the recommended gasoline which conforms to the following labels. (for EU countries)

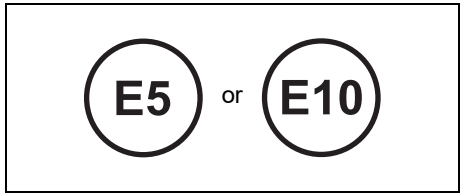

78RB0902R

NOTE:
If you are not satisfied with the driveability or fuel economy of your vehicle when you use a gasoline-alcohol blend, you should switch back to unleaded gasoline containing no alcohol.

Gasoline containing MTBE (where legally available)

Unleaded gasoline containing MTBE (methyl tertiary butyl ether) may be used in your vehicle if the MTBE content is not greater than 15%. This oxygenated fuel does not contain alcohol.

NOTICE

- **The fuel tank has an air space to allow for fuel expansion in hot weather. If you continue to add fuel after the filler nozzle has automatically shut off or an initial blowback occurs, the air chamber will become full. Exposure to heat when fully fuelled in this manner will result in leakage due to fuel expansion. To prevent such fuel leakage, stop filling after the filler nozzle has automatically shut off, or when initial vent blowback occurs, if using an alternative non-automatic system.**
- **Be careful not to spill fuel containing alcohol while refueling. If fuel is spilled on the vehicle body, wipe it up immediately. Fuels containing alcohol can cause paint damage, which is not covered under the New Vehicle Limited Warranty.**

NOTE:
- *For the fuel recommendation of Mexico model, refer to “For Mexico” (P.13-4).*
- *For the fuel recommendation of Turkey model, refer to “For Turkey” (P.13-5).*
- *For the fuel recommendation of Ukraine model, refer to “For Ukraine” (P.13-6).*

Specifications

NOTE:
Specifications are subject to change without notice.

ITEM: Dimensions				**UNIT: mm (in.)**
Overall length				3860 (152.0)
Overall width				1735 (68.3)
Overall height	2WD			1485 (58.5)
	4WD			1510 (59.4)
Wheelbase				2450 (96.5)
Track	2WD	175/65R15 tyre	Front	1530 (60.2)
			Rear	1530 (60.2)
		185/55R16 tyre	Front	1520 (59.8)
			Rear	1520 (59.8)
	4WD	175/65R15 tyre	Front	1525 (60.0)
			Rear	1535 (60.4)
		185/55R16 tyre	Front	1515 (59.6)
			Rear	1525 (60.0)

ITEM: Mass (weight)		UNIT: kg (lbs)	2WD	4WD
Curb mass (weight)	M/T	For European model	919 – 935 (2026 – 2061)	995 – 1011 (2194 – 2229)
		For Israel model	949 (2092)	–
		Except for European model and Israel model	910 – 948 (2006 – 2090)	–
	CVT	For Israel model	972 (2143)	–
		Except for Israel model	934 – 972 (2059 – 2143)	–
Gross vehicle mass (weight) rating	M/T		1365 (3009)	1441 (3177)
	CVT		1389 (3062)	–
Permissible maximum Axle Weight	Front		760 (1676)	
	Rear		760 (1676)	790 (1742)

ITEM: Engine	
Type	Z12E
Number of cylinders	3
Bore	74.0 mm (2.91 in.)
Stroke	92.8 mm (3.65 in.)
Piston displacement	1197 cm^3 (1197 cc, 73.0 cu.in)
Compression ratio	13.0 : 1 or 13.9 : 1*1

ITEM: Electrical	
Standard spark plug	NGK ILKAR7Z11S
Lead-acid battery	LN1 20HR 55Ah CCA 450A (EN)*2
Lithium-ion battery	Maintenance free*3
Fuses	See “INSPECTION AND MAINTENANCE” section.

*1 Compression ratio vary depending on engine specification.
*2 Your vehicle is equipped with a lead-acid battery for exclusive use of the ENG A-STOP system. When replacing the lead-acid battery, make sure to select the specified type for ENG A-STOP system. Consult an authorized SUZUKI dealer or a qualified workshop for replacing the lead-acid battery.
*3 If the lithium-ion battery is completely discharged, the battery cannot be recharged. When replacing or disposing the lithium-ion battery, consult an authorized SUZUKI dealer or a qualified workshop.

ITEM: Wheels and tyres	15 inch wheel model	16 inch wheel model
Tyre size, front and rear	175/65R15 84H*1*2	185/55R16 83V*1*2
Rim size	175/65R15 tyre: 15X5J	185/55R16 tyre: 16X6J
Tyre pressures	For the specified tyre pressure, see the tyre information label located on the driver's door lock pillar.	
Recommended snow chain (for Europe)	Radial thickness: 10 mm, axial thickness: 10 mm	

*1 If you cannot prepare tyres with the specified load index rate and speed symbol, prepare tyres with higher load index rate and speed symbol.

*2 If you prepare snow tyres;
- Check that they are tyres of the same size, structure and load capacity as the originally installed tyres.
- Mount the snow tyres on all four wheels.
- Understand that the maximum permissible speed of snow tyres is generally less than the originally installed tyres.

Consult an authorized SUZUKI dealer or a qualified workshop for further information.

ITEM: Spare tyre (if equipped)	For 2WD model
Tyre size, front and rear	T135/70R15 99M
Rim size	15X4T
Tyre pressures	For the specified tyre pressure, see the tyre information label located on the driver's door lock pillar.

ITEM: Recommended fuel / lubricants and capacities (approx.)				
Fuel			See “FUEL RECOMMENDATION” section.	37 L (8.1 Imp gal)
Engine oil			Classification: API SN or SP ILSAC GF-6 Viscosity: SAE 0W-16	3.1 L (5.5 Imp pt) (replacement with oil filter)
Engine coolant	Left hand drive vehicle	M/T	“SUZUKI LLC: Super (Blue) Coolant”	4.2 L (7.4 Imp pt) (including reservoir tank)
		CVT		4.4 L (7.7 Imp pt) (including reservoir tank)
	Right hand drive vehicle	M/T		4.2 L (7.4 Imp pt) (including reservoir tank)
		CVT		4.5 L (7.9 Imp pt) (including reservoir tank)
Manual transmission oil			“SUZUKI GEAR OIL 75W”	1.5 L (2.6 Imp pt)
CVT fluid			SUZUKI CVTF 4401	5.72 L (10.1 Imp pt)
Transfer oil	4WD		“SUZUKI GEAR OIL 75W-85”	0.41 L (0.72 Imp pt)
Rear differential oil				0.43 L (0.76 Imp pt)
Brake fluid / Clutch fluid			SAE J1703 or DOT3	–
Windshield washer fluid			–	2.0 L (3.5 Imp pt)

Setting mode of information display

When the ignition mode is ON and the vehicle is stationary, you can enter into the setting mode of the information display.

To switch to the setting mode

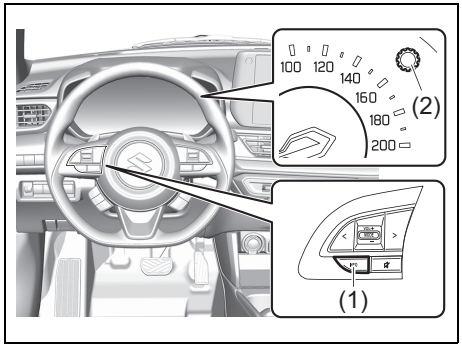

69T040040

(1) Information switch
(2) Indicator selector knob

1) Push and holding the information switch (1) or indicator selector knob (2) for more than 3 seconds.
2) After the display of setting mode is shown, select the setting item that you want to change by turning the indicator selector knob (2) left or right. Refer to “Setting items” (P.12-9).

EXAMPLE

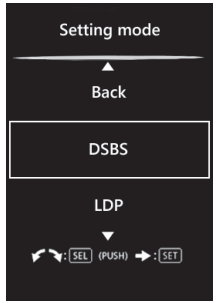

69T120100

NOTE:
- *The currently selected setting item is surrounded by a frame.*
- *If you push and hold the indicator selector knob (2) to enter into the setting mode when the display (C) shows average fuel consumption, average speed, driving time, total idling stop time and total idling fuel saved (if equipped), the value will be reset simultaneously. If you do not want to reset the value, push the indicator selector knob quickly to switch the indication of the display.*
- *If you press the engine switch or start to move the vehicle when the display is in the setting mode, the setting mode will be canceled automatically.*

To exit the setting mode

1) Push the indicator selector knob (2) and select “Back”.
2) Push the information switch (1) quickly.

NOTE:
You can exit the setting mode by either of the following operations:
- *Press the engine switch to change the ignition mode to ACC or LOCK (OFF). Start driving your vehicle.*

Setting items

NOTE:
The items that can be changed in setting mode depends on the country or region.

Item		Customization
Adjust clock		Refer to “Adjusting the clock” (P.12-13).
12H/24H		12H or 24H
Adjust date		Refer to “Adjusting the date” (P.12-13).
DSBS	Warning timing	Earlier / Default / Later
LDP (Lane departure prevention system)	Warning mode	Vibration / Buzzer
	Warning timing	Earlier / Default
	Swaying warning	“ON” / “OFF”
ACC/ISA	Traffic sign linking	“ON” / “OFF”
	Speed limit offset	–5 km/h / –4 km/h / –3 km/h / –2 km/h / –1 km/h / 0 km/h / 1 km/h / 2 km/h / 3 km/h / 4 km/h / 5 km/h
	Overtake prevention	“ON” / “OFF”
	Acceleration	Low / Mid / High
	Speed (Short push)	±1 km/h / ±5 km/h / ±10 km/h
	Speed (Long push)	±1 km/h / ±5 km/h / ±10 km/h
	Corner speed reduction	Off / Low / Mid / High

Item		Customization
TSR	Traffic sign recognition	“ON” / “OFF”
	Excess speed warn method	Both visual & audible / Visual only / No notification
	Speed limit update buz.	“ON” / “OFF”
	Excess speed warn level	1 km/h / 3 km/h / 5 km/h
		2 km/h / 5 km/h / 10 km/h
BSM/RCTA	Blind spot monitor	“ON” / “OFF”
	Rear cross traffic	“ON” / “OFF”
Driver monitoring		“ON” / “OFF”
Door lock	Door unlock	All doors / Driver door
	Outside buzzer	“ON” / “OFF”
Lights	Lane change	“ON” / “OFF”
	High beam assist	“ON” / “OFF”
Guide me light	To car	10 seconds / 15 seconds / 20 seconds / 25 seconds
	To home	10 seconds / 15 seconds / 20 seconds / 25 seconds / 30 seconds
Oil change		“Reset” To reset the system, push and hold the indicator selector knob for a while.
Auto stop / start AC		Standard / Economy / Comfort For details, refer to “Air conditioning system settings by ENG A-STOP system” (P.5-34).

Item		Customization
TPMS	Tyre pressure	The display shows current tyre inflation pressure. For details, refer to “Tyre Pressure Monitoring System (TPMS)” (P.5-158).
	TPMS mode	Comfort mode / Load mode For details, refer to “Tyre Pressure Monitoring System (TPMS)” (P.5-158).
Distance units		“Km” / “Miles”
Fuel economy units		“km/L” / “L/100km” / “MPG(UK)”
Select language		You can change the language of the information display.
Fuel economy reset		After refuel / Reset with Trip A / Manual
Temperature units		“°C” or “°F”
Display item	Calendar	“Calendar ON” / “Calendar OFF”
	Calendar format	DD.MM.YYYY / YYYY.MM.DD / MM.DD.YYYY
	Fuel economy history	Time / Drive cycle
	Motion history	“Display ON” / “Display OFF”
	Auto stop info	“Display ON” / “Display OFF”
	Auto stop warning	“Display ON” / “Display OFF”
	Regen indicator	“Display ON” / “Display OFF”
Animation	Warning	“Display ON” / “Display OFF”
Startup sound		“ON” or “OFF”
Notification sounds		Volume low / Volume mid / Volume high

Item	Customization
Default (Initialization setting)	Yes or No

Adjusting the clock

Adjust the clock by selecting “Clock setting” in the “Setting mode”. Then, select “Adjust clock”.

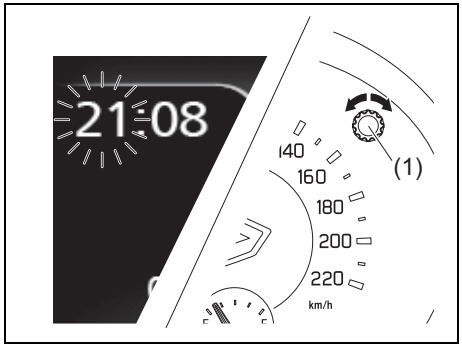

69T120010

1) To change the hour indication, turn the indicator selector knob (1) left or right repeatedly when the hour indication blinks. To change the hour indication quickly, turn and hold the indicator selector knob (1). To set the hour indication, push the indicator selector knob (1) and the minute indication blinks.
2) To change the minute indication, turn the indicator selector knob (1) left or right repeatedly when the minute indication blinks. To change the minute indication quickly, turn and hold the indicator selector knob (1). To set the minute indication, push the indicator selector knob (1).

Adjusting the date

Adjust the date by selecting “Clock setting” in the “Setting mode”. Then select “Adjust date”.

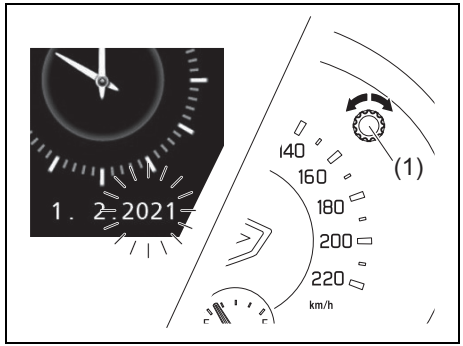

69T120030

1) To change the year indication, turn the indicator selector knob (1) left or right repeatedly when the day indication blinks. To change the day indication quickly, turn and hold the indicator selector knob (1). To set the day indication, push the indicator selector knob (1) and the day indication blinks.
2) To change the month indication, turn the indicator selector knob (1) left or right repeatedly when the month indication blinks. To change the month indication quickly, turn and hold the indicator selector knob (1). To set the month indication, push the indicator selector knob (1) and the day indication blinks.
3) To change the day indication, turn the indicator selector knob (1) left or right repeatedly when the day indication blinks. To change the day indication quickly, turn and hold the indicator selector knob (1). To set the day indication, push the indicator selector knob (1).

Air conditioning system settings by ENG A-STOP system

- When using the automatic heating and air conditioning system while the engine is stopped automatically by the ENG A-STOP system, you can select one of the following settings via the setting mode of the information display.

  – Standard
  – Economy
  – Comfort

- When “Economy” is selected, engine auto stop condition is eased, compared with “Standard”. As engine auto stop condition will occur more frequently, the stop time will be longer, leading to reduction of fuel consumption.
- When “Comfort” is selected, engine auto stop condition becomes severe, compared with “Standard”. As engine auto stop condition will occur less frequently, the stop time will be shorter, leading to more comfortable cabin condition by air conditioner.

MEMO

SUPPLEMENT

For Australia 13-1
For Mexico 13-4
For Turkey 13-5
For Ukraine 13-6

For Australia

Built date

Built date is located on Vehicle Identification plate.
“Built Date” means – the calendar month and the year in which the body shell and power train sub-assemblies are conjoined and the vehicle is driven or moved from the production line.

Child restraint

⚠ WARNING

Child restraint anchorages are designed to withstand only those loads imposed by correctly fitted child restraints. Under no circumstances are they to be used for adult seat belts, harnesses or for attaching other items or equipment to the vehicle.

Child restraint top strap anchor brackets

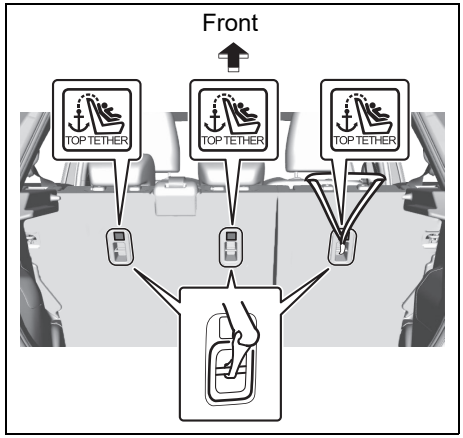

69T130020

Some child restraint systems require the use of a top strap. Top strap anchor brackets are provided in your vehicle at the locations shown in the illustration.

Rear-facing child restraint

⚠ WARNING

- **Do not use a rearward facing child restraint on a seat protected by an airbag in front of it.**
- **Do not install a rear-facing child restraint in the front passenger’s seat. If the passenger’s front airbag inflates, a child in a rear-facing child restraint could be killed or severely injured. The back of a rear-facing child restraint would be too close to the inflating airbag.**

If you must use a front-facing child restraint in the front passenger’s seat, be sure to move the front passenger’s seat as far back as possible. Please refer to “Child restraint systems” (P.2-29) for details on securing your child.

Warning label for front passenger's front airbag

72M00150

You may find this label on the sun visor.

⚠ WARNING

NEVER use a rearward facing child restraint on a seat protected by an ACTIVE AIRBAG in front of it, DEATH or SERIOUS INJURY to the CHILD can occur.

Seat belt warning

Follow this WARNING in addition to the SEAT BELT instruction in this book.

⚠ WARNING

Seat belts are designed to bear upon the bony structure of the body, and should be worn low across the front of the pelvis or the pelvis, chest and shoulders, as applicable; wearing the lap section of the belt across the abdominal area must be avoided.

- **Seat belts should be adjusted as firmly as possible, consistent with comfort, to provide the protection for which they have been designed. A slack belt will greatly reduce the protection afforded to the wearer.**
- **Care should be taken to avoid contamination of the webbing with polishes, oils and chemicals, and particularly battery acid. Cleaning may safely be carried out using mild soap and water. The belt should be replaced if webbing becomes frayed, contaminated or damaged.**

(Continued)

⚠ WARNING

(Continued)

- **It is essential to replace the entire assembly after it has been worn in a severe impact even if damage to the assembly is not obvious.**
- **Belts should not be worn with straps twisted.**
- **Each belt assembly must only be used by one occupant; it is dangerous to put a belt around a child being carried on the occupant's lap.**

In the case where a "*Seat Belt Assembly*" incorporates an "*Automatic Length Adjusting and Locking Retractor*" or an "*Emergency Locking Retractor*".

⚠ WARNING

- **No modifications or additions should be made by the user which will either prevent the seat belt adjusting devices from operating to remove slack, or prevent the seat belt assembly from being adjusted to remove slack.**
- **Referring to the SEAT BELT instruction in this book, adjust the seat belt so that the lap and sash portions of the *Seat Belt Assembly* fit as firmly as possible consistent with comfort.**

Lithium battery

78RM10010

⚠ WARNING

Do not ingest the battery, Chemical Burn Hazard
(The remote control supplied with) This product contains a coin/button cell battery. If the coin/button cell battery is swallowed, it can cause severe internal burns in just 2 hours and can lead to death.
Keep new and used batteries away from children. If the battery compartment does not close securely, stop using the product and keep it away from children. If you think batteries might have been swallowed or placed inside any part of the body, seek immediate medical attention.

For Mexico

Fuel recommendation

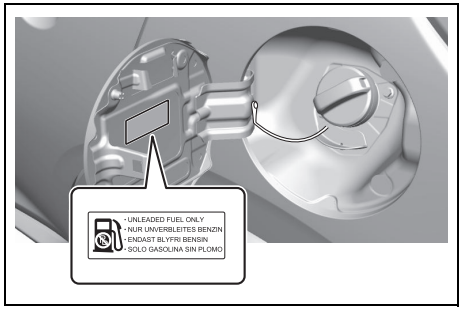

69T130040

Your vehicle requires regular unleaded gasoline with a minimum rating of 87 pump octane ((R + M)/2 method). In some areas, the only fuels that are available are oxygenated fuels.

Oxygenated fuels which meet the minimum octane requirement and the requirements described below may be used in your vehicle without jeopardizing the New Vehicle Limited Warranty.

NOTE:
Oxygenated fuels are fuels which contain oxygen-carrying additives such as MTBE or alcohol.
If the "RON 95" label is attached, you must use unleaded gasoline with a minimum rating of 91 pump octane ((R + M)/2 method).

Gasoline-ethanol blends
Blends of unleaded gasoline and ethanol (grain alcohol), also known as gasohol, may be used in your vehicle if the ethanol content is not greater than 10%.

Fuel pump labeling

In some states, pumps that dispense oxygenated fuels are required to be labeled for the type and percentage of oxygenate and whether important additives are present. Such labels may provide enough information for you to determine if a particular blend of fuel meets the requirements listed above. In other areas, pumps may not be clearly labeled as to the content or type of oxygenate and additives. If you are not sure that the fuel you intend to use meets these requirements, check with the service station operator or the fuel supplier.

NOTE:
To help clean the air, SUZUKI recommends you use the oxygenated fuels. However, if you are not satisfied with the driveability or fuel economy of your vehicle when you are using an oxygenated fuel, switch back to the regular unleaded gasoline.

NOTICE

Be careful not to spill fuel containing alcohol while refueling. If fuel is spilled on the vehicle body, wipe it up immediately. Fuels containing alcohol can cause paint damage, which is not covered under the New Vehicle Limited Warranty.

Tyre rotation

4-tyre rotation

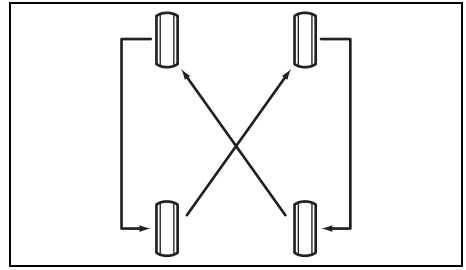

69T130010

To avoid uneven wear of your tyres and to prolong their life, rotate the tyres as illustrated. Tyres should be rotated as recommended in the periodic maintenance schedule. After rotation, adjust front and rear tyre pressures to the specification listed on your vehicle's Tyre Information Label.

For Turkey

Fuel recommendation

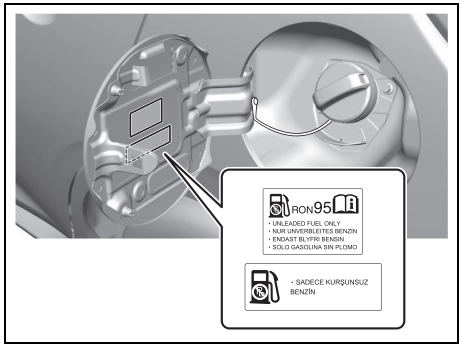

69T130030

You must use unleaded gasoline with an octane number (RON) of 95 or higher.
These vehicles are also identified by a label attached near the fuel filler pipe that states: “UNLEADED FUEL ONLY”, “NUR U NVERBLEITES BENZIN”, “ENDAST BLYFRI BENSIN”, “SOLO GASOLINA SIN PLOMO” or “SADECE KURŞUNSUZ BENZİN”.

Gasoline-ethanol blends
Blends of unleaded gasoline and ethanol (grain alcohol), also known as gasohol, are commercially available in certain areas. Blends of this type may be used in your vehicle if they are no more than 10% ethanol. Check that this gasoline-ethanol blend has octane ratings no lower than those recommended for the gasoline.

NOTE:
If you are not satisfied with the driveability or fuel economy of your vehicle when you use a gasoline-alcohol blend, you should switch back to unleaded gasoline containing no alcohol.

NOTICE

- **The fuel tank has an air space to allow for fuel expansion in hot weather. If you continue to add fuel after the filler nozzle has automatically shut off or an initial blowback occurs, the air chamber will become full. Exposure to heat when fully fuelled in this manner will result in leakage due to fuel expansion. To prevent such fuel leakage, stop filling after the filler nozzle has automatically shut off, or when using an alternative non-automatic system, initial vent blowback occurs.**

(Continued)

NOTICE

(Continued)

- **Be careful not to spill fuel containing alcohol while refueling. If fuel is spilled on the vehicle body, wipe it up immediately. Fuels containing alcohol can cause paint damage, which is not covered under the New Vehicle Limited Warranty.**

For Ukraine

Fuel recommendation

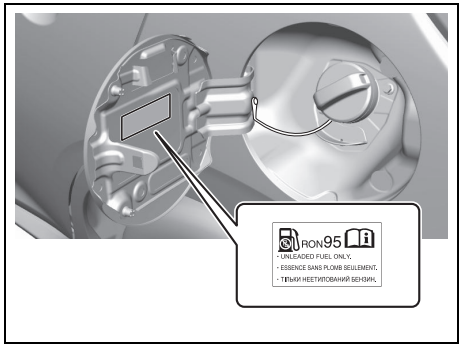

69T130050

To avoid damaging the catalytic converter, you must use unleaded gasoline with an octane number (RON) of 91 or higher (or 95 or higher if it is stated on the fuel filler lid), which comply with the European standard EN228

These vehicles are also identified by a label attached near the fuel filler pipe that states: “UNLEADED FUEL ONLY”, “ESSENCE SANS PLOMB SEULEMENT” or “ТІЛЬКИ НЕЕТИЛОВАНИЙ БЕНЗИН”.

Gasoline-ethanol blends

Blends of unleaded gasoline and ethanol (grain alcohol), also known as gasohol, are commercially available in certain areas. Blends of this type may be used in your vehicle if they are no more than 10% ethanol. Check that this gasoline-ethanol blend has octane ratings no lower than those recommended for the gasoline.

NOTE:
If you are not satisfied with the driveability or fuel economy of your vehicle when you use a gasoline-alcohol blend, you should switch back to unleaded gasoline containing no alcohol.

Gasoline containing MTBE (where legally available)

Unleaded gasoline containing MTBE (methyl tertiary butyl ether) may be used in your vehicle if the MTBE content is not greater than 15%. This oxygenated fuel does not contain alcohol.

NOTICE

- **The fuel tank has an air space to allow for fuel expansion in hot weather. If you continue to add fuel after the filler nozzle has automatically shut off or an initial blowback occurs, the air chamber will become full. Exposure to heat when fully fuelled in this manner will result in leakage due to fuel expansion. To prevent such fuel leakage, stop filling after the filler nozzle has automatically shut off, or when using an alternative non-automatic system, initial vent blowback occurs.**
- **Be careful not to spill fuel containing alcohol while refueling. If fuel is spilled on the vehicle body, wipe it up immediately. Fuels containing alcohol can cause paint damage, which is not covered under the New Vehicle Limited Warranty.**

MEMO

INDEX

Symbols

"R" (reverse gear) indicator light 4-56

A

ABS warning light 5-156
Accelerator and brake 4-7
Accelerator pedal 5-9
Accessory socket 7-9
Adaptive cruise control 5-98, 5-108
Adaptive cruise control (with following function for all speeds) 5-110
Adaptive cruise control system indicator light 4-53
Air cleaner 9-26
Air conditioner filter replacement 9-55
Air conditioning system 9-55
Air conditioning system settings by ENG A-STOP system 12-14
Airbag warning light 4-42
Anti-lock Brake System (ABS) 5-153
Anti-lock Brake System (ABS) warning light 4-43
Asleep at the wheel warning 5-142
Assist grips 7-13
Automatic heating and air conditioning system (climate control) 7-25
Automatic light operation 3-21
Average fuel consumption 4-7
Average speed 4-7

B

Battery 9-38, 9-58
Blind Spot Monitor (BSM) 5-123
Blind Spot Monitor (BSM) OFF indicator light 4-54
Brake assist system 5-153
Brake pedal 5-9, 9-32
Brakes 9-30
Braking 5-152
Brightness control 4-3
Built date 13-1
Bulb replacement 9-43

C

Card holder 7-6
Catalytic converter 6-14
Certification mark of child restraint system to comply with UN R44/R129 standard 2-31
Changing engine oil and oil filter 9-24
Changing wheels 10-25
Characteristics of the vehicle with Ccontinuously Variable Transmission (CVT) 5-49
Charging warning light 4-45
Chassis serial number 12-1
Child restraint 13-1
Child restraint systems 2-29
Child restraint systems installation suitability for each seat position (for the vehicle with airbag deactivation switch) 2-33
Child restraint systems installation suitability for each seat position (for the vehicle without airbag deactivation switch) 2-39
Child-proof locks (rear door) 3-5
Clock 4-5
Clock and date 4-7
Clutch 9-28

Clutch fluid 9-28
Clutch pedal 5-9, 9-28
Compact spare tyre 9-37
Continuously Variable Transmission (CVT) 5-40
Continuously Variable Transmission (CVT) fluid 9-29
Coolant level check 9-25
Coolant replacement 9-26
Correct sitting posture 2-53
Corrosion Prevention 11-1

D

Daily inspection checklist 5-1
Daytime Running Light (D.R.L.) system 3-24
Deceleration energy regenerating indicator light 4-50, 5-20
Distracted driving warning 5-143
Door Locks 3-2
Drink holder 7-10
Drive belt 9-23
Driver Monitoring System (DMS) 5-141
Driver Monitoring System OFF indicator light 4-55
Driver's seat belt reminder light / front passenger's seat belt reminder light 4-42
Driving on hills 6-7
Driving range 4-7
Driving time 4-7
Drowsiness warning 5-142
Dual Sensor Brake Support II (DSBS II) 5-71
Dual Sensor Brake Support II (DSBS II) OFF indicator light 4-51
Dual Sensor Brake Support II (DSBS II) OFF switch 5-79

E

eCall 10-7
eCall warning message 10-12
Electric power steering warning light 4-44
Electric window controls 3-17
Emergency Locking Retractor (ELR) 2-19
Emergency Stop Signal (ESS) 5-157
Energy flow 4-7, 4-13
ENG A-STOP indicator light 4-6
ENG A-STOP OFF light 4-6, 4-50, 5-20
ENG A-STOP OFF switch 5-31
Engine coolant 9-25, 9-58
Engine hood 7-4
Engine oil and filter 9-23
Engine oil consumption 5-5
Engine oil pressure warning light 4-45
Engine serial number 12-1
Engine switch 5-5
Engine switch illumination 5-10
Engine trouble: Does not start 10-34
Engine trouble: Overheating 10-34
Engine trouble: Starter does not operate 10-34
ESP® indicator light 4-49, 5-150
ESP® OFF indicator light 4-49, 5-151
ESP® OFF switch 5-150

F

Flat tyre repair kit 10-27
Floor mats 2-1
Folding rear seats 2-13
Footrest 7-13
For Australia 13-1
For Mexico 13-4
For Turkey 13-5
For Ukraine 13-6
Front airbags 2-50
Front passenger airbag deactivation system 2-51
Front position light and Daytime Running Light (D.R.L) 9-45
Front seat heater 2-8
Front seats 2-5
Front turn signal light 9-45
Fuel consumption 4-7
Fuel filler cap 7-1
Fuel filler door 7-1
Fuel gauge 4-2
Fuel pump labeling 13-4
Fuel recommendation 12-2, 13-4, 13-5, 13-6
Full wheel cover 10-26, 10-27
Function of Airbags 2-59
Fuses 9-40
Fuses in engine compartment 9-40
Fuses under dashboard 9-42

G

Gasoline Particulate Filter (GPF) (if equipped) 5-17
Gasoline-ethanol blends 12-2, 13-4, 13-5, 13-6
Gear oil 9-27
Gear oil change 9-27
Gear oil level check 9-27
Gear position 4-14
Gearshift indicator 4-14, 5-45
Glove box 7-13
Guide me light 3-24

H

Handling for airbags 2-57
Hazard warning switch 3-27
Head restraints 2-7, 2-11
Headlight aiming 9-42
Headlight leveling switch 3-26
Heated rear window switch / heated outside rearview mirror switch 3-32
Heating and air conditioning system 7-17
High beam assist 5-92
High beam assist indicator light (green) 4-53
High beam assist warning light (orange) 4-47
High mount stop light 9-47
Highway driving 6-7
Hill hold control system 5-151
Horn 3-31
HYBRID 5-18

I
If you cannot shift CVT gearshift lever out of “P” (PARK) 5-45
If you get a flat tyre while driving 10-33
Illumination indicator light 4-48
Immobilizer / keyless push start system warning light 4-46, 5-7
Immobilizer system 5-7
Improving fuel economy 6-8
Information display 4-4
Inside Rearview Mirror 2-9
Installation of child restraint with top tether 2-47
Installation of radio frequency transmitters 7-32
Instantaneous fuel consumption 4-7
Instrument cluster 4-1
Interior light 7-7, 9-50
Interior workable area 5-9
Intersection guidance 4-7
J
Jacking instructions 10-22
Jump-starting Instructions 10-32
K
Keyless entry system 3-8
Keyless push start system 5-9
Keyless push start system remote controller 3-10
Keys 3-1
Kickdown 5-50
L
Lane departure prevention 5-80, 5-81
Lane departure prevention indicator light 4-52
Lane departure prevention OFF indicator light 4-52
Lane departure warning 5-80
Lane keep assist 5-87
Lane keep assist indicator light 4-52
Lap-shoulder belt 2-19
LED headlights 9-44
License plate light 9-49
Light reminder buzzer 3-24
Lighting control lever 3-21
Lithium-ion battery 5-21
Lithium-ion battery indication 5-19
Low fuel warning light 4-43
Low tyre pressure warning light 4-39, 5-158
Luggage compartment carpet 7-16
Luggage compartment cover 7-15
Luggage compartment hook 7-15
Luggage compartment light 7-8
M
Main beam (high beam) indicator light 4-48
Maintenance recommended under severe driving conditions (except for European countries and Israel) 9-18
Maintenance recommended under severe driving conditions (for European countries and Israel) 9-8
Maintenance schedule 9-2
Malfunction indicator light 4-44
Manual air conditioning system (with digital control panel) 7-18
Manual mode 5-43
Manual transmission 5-39
Master warning indicator light 4-48
Motion 4-7

O

Odometer 4-15
Off-road driving 6-8
Oil change request light 4-55
Oil level check 9-24
Open door warning light 4-46
Outside rearview mirrors 2-10
Outside rearview mirrors folding switch 2-10

P

Parking brake 9-33
Parking brake lever 5-34
Parking brake reminder buzzer 5-35
Parking sensor indicator light 4-54
Parking sensors 5-136
Pedal 5-8
Periodic maintenance schedule
(except for European countries and Israel) 9-13
Periodic maintenance schedule
(for European countries and Israel) 9-3
Pinching prevention function 3-19
Power-assisted Brakes 5-153
Preparation before winter season 9-58

R

Radio antenna 7-32
Raising vehicle with garage kack 10-24
Rear combination light 9-47
Rear Cross Traffic Alert (RCTA) OFF indicator light 4-54
Rear CrossTtraffic Alert (RCTA) 5-129
Rear differential oil 9-27
Rear fog light 9-49
Rear fog light indicator light 4-48
Rear fog light switch 3-25
Rear passenger's seat belt reminder light 4-42
Rear seats 2-11
Rear window washer 3-31
Rear window wiper/washer switch 3-30
Rearview camera 5-145
Remote audio controls 7-33
Replacement of the battery 9-39
Replacing tyres and/or wheels 5-166
Running-in 6-13

S

Safety for child 2-15
Seat adjustment 2-5
Seat belt 2-19
Seat belt care 2-26
Seat belt force limiter system 2-28
Seat belt handling 2-25
Seat belt hanger 2-26
Seat belt reminder 2-23
Seat belt warning 13-2
Seat belts and child restraint systems 2-2
Seat height adjustment lever 2-6
Seat position adjustment lever 2-6
Seatback angle adjustment lever 2-6
Securing child restraint system by ISOFIX 2-45
Securing child restraint system by seat belt 2-43
Selecting an appropriate child restraint system 2-31
Selection of coolant 9-25
Selection of ignition modes 5-10
Selector position 4-14
Setting mode of information display 12-8

Shoulder anchor height adjuster 2-21
SHVS (Smart Hybrid Vehicle by Suzuki)..... 5-18
Side airbags and side curtain airbags 2-51
Side door locks 3-3
Side turn signal light 9-47
S-mode..... 5-42
S-mode indicator 4-49
Snow chains..... 6-10
Spark plugs 9-27
Specified oil..... 9-23
Speed limiter 5-55
Speed limiter with traffic sign recognition 5-58
Speedometer 4-2
Stability control system 5-149
Starting engine..... 5-13
Steering wheel 9-34
Stopping engine..... 5-15
Storage area 7-12
Stuck vehicle 6-10
Sun visor 7-6
Supplemental Restraint System (airbags)..... 2-49
SUZUKI SAFETY SUPPORT..... 5-59

T

Tachometer 4-2
Tailgate 3-6
Temperature gauge 4-3
Theft deterrent alarm system 3-15
Theft deterrent light..... 3-17
Thermometer..... 4-6
Tilt / telescoping steering lock lever..... 2-9
Torque and power..... 4-7
Total idling stop time and total idling fuel saved.....4-7, 4-11
Towing by tow truck 10-1
Towing by using towing eye 10-3
Traction control system 5-148
Traffic sign recognition 5-94
Trailer hitch installation points.....8-6
Trailer towing.....8-1
Transfer oil.....9-27
Transmission warning light 4-46, 5-48
Turn signal control lever 3-26
Turn signal indicators.....4-48
Turn signal operation 3-26
Tyre chains 9-61
Tyre changing tool 10-21
Tyre inspection.....9-35
Tyre pressure 5-2
Tyre Pressure Monitoring System (TPMS) 5-158
Tyre rotation 9-36
Tyres.....9-34

U

Ultrasonic sensors.....5-132
USB charging socket.....7-14
USB socket 7-14
Using transmission.....5-38

V

Vanity mirror.....7-7
Vehicle identification 12-1
Vehicle loading.....8-1
Vehicle speed 4-7
Vehicle swaying warning.....5-81

W

Warning and indicator lights 4-39
Warning and indicator messages
..... 4-16, 5-109, 5-121, 5-128, 5-131, 5-140
Warning label for front passenger's front airbag 13-2
Warning label of SRS airbag for front passenger's seat
..... 2-54
Washing 11-3
Waxing 11-6
When starting the engine 2-66
Windows 3-17
Windshield washer 3-30
Windshield washer fluid 9-54, 9-58
Windshield wiper and washer lever 3-28
Windshield wipers 3-29
Winter tyre 9-58
Wiper and washer operation 3-29
Wiper blades 9-51

For countries, in which the revised edition is applicable after the third edition of UN Regulation No.10 has been enacted.

Installation of Radio Frequency (RF) Transmitting Equipment

Your vehicle is conformed to the revised edition since the third edition of UN Regulation No.10.

When you intend to use RF transmitting equipment in your vehicle, we strongly recommend that you select the equipment which conforms to applicable rules or regulations in your country, and consult an authorized SUZUKI dealer or qualified service technician for advice.

Table : Installing and the use of the on-board RF transmitter equipment

Frequency bands (MHz)		Antenna position at vehicle*	Maximum output power (W)
144-146	Amateur band	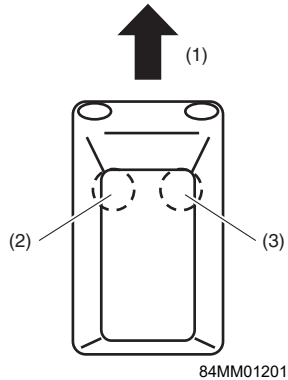	50
430-440	Amateur band		50
1200-1300	Amateur band		10

(1) Front
(2) Antenna installation position: Front left of roof
(3) Antenna installation position: Front right of roof

*The illustration is example of hatchback vehicle.

Specific conditions for installation

NOTE:
1) Antenna cable shall be routed as far as possible from the vehicle electrical and electronic systems and wiring harness in the vehicle.
2) Power cable of transmitter shall be properly connected to lead-acid battery on the vehicle.

NOTICE
Before using your vehicle, check if there is no interference to all electrical devices on your vehicle for both Standby mode and Transmitting mode of the RF transmitting equipment.

Blind Spot Monitor (BSM) System

Company : Hella GmbH & Co. KGaA
Street : Rixbecker Str.75
Location : 59552 Lippstadt
Country : Germany

	Language	Text for manual 4G0 (To be confirmed by Suzuki)	Frequency range:	Transmission power:
1	Bulgarian	С настоящото Hella GmbH & Co. KGaA декларира, че този тип радиосъоръжение RS4 е в съответствие с Директива 2014/53/ЕС. Цялостният текст на ЕС декларацията за съответствие може да се намери на следния интернет адрес: www.hella.com/suzuki	Честотният диапазон: 24.050 GHz.....24.250 GHz	Предавателна мощност: 20 dBm (максимум)
2	Czech	Tímto Hella GmbH & Co. KGaA prohlašuje, že typ rádiového zařízení RS4 je v souladu se směrnicí 2014/53/EU. Úplné znění EU prohlášení o shodě je k dispozici na této internetové adrese: www.hella.com/suzuki	Frekvenční rozsah: 24.050 GHz.....24.250 GHz	Transmit Power: 20 dBm (maximum)
3	Danish	Hermed erklærer Hella GmbH & Co. KGaA, at radioudstyrstypen RS4 er i overensstemmelse med direktiv 2014/53/EU. EU-overensstemmelseserklæringens fulde tekst kan findes på følgende internetadresse: www.hella.com/suzuki	Frekvensområde: 24.050 GHz.....24.250 GHz	Transmit Power: 20 dBm (maksimum)
4	German	Hiermit erklärt Hella GmbH & Co. KGaA, dass der Funkanlagentyp RS4 der Richtlinie 2014/53/EU entspricht. Der vollständige Text der EU-Konformitätserklärung ist unter der folgenden Internetadresse verfügbar: www.hella.com/suzuki	Frequenzbereich: 24.050 GHz ··· 24.250 GHz	Sendeleistung: 20dBm (maximal)
5	Greek	Με την παρούσα ο/η Hella GmbH & Co. KGaA, δηλώνει ότι ο ραδιοεξοπλισμός RS4 πληροί την οδηγία 2014/53/ΕΕ. Το πλήρες κείμενο της δήλωσης συμμόρφωσης ΕΕ διατίθεται στην ακόλουθη ιστοσελίδα στο διαδίκτυο: www.hella.com/suzuki	Εύρος συχνοτήτων: 24.050 GHz.....24.250 GHz	Ισχύς μετάδοσης: 20 dBm (μέγιστο)
6	English	Hereby, Hella GmbH & Co. KGaA declares that the radio equipment type RS4 is in compliance with Directive 2014/53/EU. The full text of the EU declaration of conformity is available at the following internet address: www.hella.com/suzuki	Frequency range: 24.050 GHz ... 24,250 GHz	Transmission power: 20 dBm (maximum)
7	Spanish	Por la presente, Hella GmbH & Co. KGaA declara que el tipo de equipo radioeléctrico RS4 es conforme con la Directiva 2014/53/UE. El texto completo de la declaración UE de conformidad está disponible en la dirección Internet siguiente: www.hella.com/suzuki	Gama de frecuencias: 24.050 GHz.....24.250 GHz	Potencia de transmisión: 20 dBm (máximo)
8	Estonian	Käesolevaga deklareerib Hella GmbH & Co. KGaA, et käesolev raadioseadme tüüp RS4 vastab direktiivi 2014/53/EL nõuetele. ELi vastavusdeklaratsiooni täielik tekst on kättesaadav järgmisel internetiaadressil: www.hella.com/suzuki	Sagedusala: 24.050 GHz.....24.250 GHz	Saatevõimsus: 20 dBm (maksimaalselt)
9	Finnish	Hella GmbH & Co. KGaA vakuuttaa, että radiolaitetyyppi RS4 on direktiivin 2014/53/EU mukainen. EU-vaatimustenmukaisuusvakuutuksen täysimittainen teksti on saatavilla seuraavassa internetosoitteessa: www.hella.com/suzuki	Taajuusalue: 24.050 GHz.....24.250 GHz	Lähetysteho: 20 dBm (maksimi)
10	French	Le soussigné, Hella GmbH & Co. KGaA, déclare que l'équipement radioélectrique du type RS4 est conforme à la directive 2014/53/UE. Le texte complet de la déclaration UE de conformité est disponible à l'adresse internet suivante: www.hella.com/suzuki	Gamme de fréquences: 24.050 GHz.....24.250 GHz	Puissance de transmission: 20 dBm (maximum)
11	Irish	Leis seo, Dearbhaíonn Hella GmbH & Co. KGaA go bhfuil an cineál trealaimh raidió RS4 i gcomhréir le Treoir 2014/53 / AE. Tá téacs iomlán an dearbhú comhréireachta an AE ar fáil ag an seoladh idirlín seo a leanas: www.hella.com/suzuki	Réimse Miniciocht: 24.050 GHz.....24.250 GHz	Tarchuirfidh Power: 20 dBm (uasmhéid)
12	Croatian	Hella GmbH & Co. KGaA ovime izjavljuje da je radijska oprema tipa RS4 u skladu s Direktivom 2014/53/EU. Cjeloviti tekst EU izjave o sukladnosti dostupan je na sljedećoj internetskoj adresi: www.hella.com/suzuki	Frekvencijski raspon: 24.050 GHz.....24.250 GHz	Prijenos snage: 20 dBm (maksimalno)
13	Hungarian	Hella GmbH & Co. KGaA igazolja, hogy a RS4 típusú rádióberendezés megfelel a 2014/53/EU irányelvnek. Az EU-megfelelőségi nyilatkozat teljes szövege elérhető a következő internetes címen: www.hella.com/suzuki	Frekvencia tartomány: 24.050 GHz.....24.250 GHz	Átviteli teljesítmény: 20 dBm (maximum)

14	Italian	Il fabbricante, Hella GmbH & Co. KGaA, dichiara che il tipo di apparecchiatura radio RS4 è conforme alla direttiva 2014/53/UE. Il testo completo della dichiarazione di conformità UE è disponibile al seguente indirizzo Internet: www.hella.com/suzuki	Gamma di frequenza: 24.050 GHz.....24.250 GHz	Trasmissione di potenza: 20 dBm (massimo)
15	Lithuanian	Aš, Hella GmbH & Co. KGaA, patvirtinu, kad radijo įrenginių tipas RS4 atitinka Direktyvą 2014/53/ES. Visas ES atitikties deklaracijos tekstas prieinamas šiuo interneto adresu: www.hella.com/suzuki	Dažnių diapazonas: 24.050 GHz.....24.250 GHz	Perduoti Galia: 20 dBm (maksimali)
16	Latvin	Ar šo Hella GmbH & Co. KGaA deklarē, ka radioiekārta RS4 atbilst Direktīvai 2014/53/ES. Pilns ES atbilstības deklarācijas teksts ir pieejams šādā interneta vietnē: www.hella.com/suzuki	Frekvenču diapazons: 24.050 GHz.....24.250 GHz	Pārraidīt Jauda: 20 dBm (maksimums)
17	Maltese	B'dan, Hella GmbH & Co. KGaA, niddikjara li dan it-tip ta' tagħmir tar-radju RS4 huwa konformi mad-Direttiva 2014/53/UE. It-test kollu tad-dikjarazzjoni ta' konformità tal-UE huwa disponibbli f'dan l-indirizz tal-Internet li ġej: www.hella.com/suzuki	Firxa ta 'frekwenza: 24.050 GHz.....24.250 GHz	Jittrasmettu Power: 20 dBm (massimu)
18	Dutch	Hierbij verklaar ik, Hella GmbH & Co. KGaA, dat het type radioapparatuur RS4 conform is met Richtlijn 2014/53/EU. De volledige tekst van de EU-conformiteitsverklaring kan worden geraadpleegd op het volgende internetadres: www.hella.com/suzuki	Frequentiebereik: 24.050 GHz.....24.250 GHz	Zendvermogen: 20 dBm (maximum)
19	Polish	Hella GmbH & Co. KGaA niniejszym oświadcza, że typ urządzenia radiowego RS4 jest zgodny z dyrektywą 2014/53/UE. Pełny tekst deklaracji zgodności UE jest dostępny pod następującym adresem internetowym: www.hella.com/suzuki	Zakres częstotliwości: 24.050 GHz.....24.250 GHz	Moc transmisji: 20 dBm (maksymalnie)
20	Portugese	O(a) abaixo assinado(a) Hella GmbH & Co. KGaA declara que o presente tipo de equipamento de rádio RS4 está em conformidade com a Diretiva 2014/53/UE. O texto integral da declaração de conformidade está disponível no seguinte endereço de Internet: www.hella.com/suzuki	Faixa de freqüência: 24.050 GHz.....24.250 GHz	Potência de transmissão: 20 dBm (máximo)
21	Romanian	Prin prezenta, Hella GmbH & Co. KGaA declară că tipul de echipamente radio RS4 este în conformitate cu Directiva 2014/53/UE. Textul integral al declarației UE de conformitate este disponibil la următoarea adresă internet: www.hella.com/suzuki	Gama de frecvențe: 24.050 GHz.....24.250 GHz	Putere Transmit: 20 dBm (maxim)
22	Slovak	Hella GmbH & Co. KGaA týmto vyhlasuje, že rádiové zariadenie typu RS4 je v súlade so smernicou 2014/53/EÚ. Úplné EÚ vyhlásenie o zhode je k dispozícii na tejto internetovej adrese: www.hella.com/suzuki	Frekvenčný rozsah: 24.050 GHz.....24.250 GHz	Transmit Power: 20 dBm (maximum)
23	Slovene	Hella GmbH & Co. KGaA potrjuje, da je tip radijske opreme RS4 skladen z Direktivo 2014/53/EU. Celotno besedilo izjave EU o skladnosti je na voljo na naslednjem spletnem naslovu: www.hella.com/suzuki	Frekvenčni razpon: 24.050 GHz.....24.250 GHz	Oddajna moč: 20 dBm (največ)
24	Swedish	Härmed försäkrar Hella GmbH & Co. KGaA att denna typ av radioutrustning RS4 överensstämmer med direktiv 2014/53/EU. Den fullständiga texten till EU-försäkran om överensstämmelse finns på följande webbadress: www.hella.com/suzuki	Frekvensområde: 24.050 GHz.....24.250 GHz	Transmit Effekt: 20 dBm (max)
25	Turkish	Hella GmbH & Co. KGaA, işbu belgeyle RS4 tipi radyo ekipmanının 2014/53/AB sayılı direktife uygun olduğunu beyan eder. AB uygunluk beyanının tam metni, aşağıdaki internet adresinde mevcuttur: www.hella.com/suzuki	Frekvensområde: 24.050 GHz.....24.250 GHz	Transmit Effekt: 20 dBm (max)

Radar de corto alcance
RS4
Hella GmbH & Co. KGaA
IFT: RLVHERS17-0286

La operación de este equipo esta sujeta a las siguientes dos condiciones:
(1) es posible que este equipo o dispositivo no cause interferencia perjudicial y
(2) este equipo o dispositivo debe aceptar cualquier interferencia, incluyendo la que pueda causar su operación no deseada

Prin prezenta, HELLA GmbH & Co. KGaA declară că tipul de echipamente radio RS4 este în conformitate cu Reglementarea Tehnică “Punerea la dispoziție pe piață a echipamentelor radio”, aprobată prin HG nr. 34 din 30.01.2019.

Textul integral al declarației de conformitate este disponibil la următoarea adresă de internet: www.hella.com/suzuki

Informații tehnice:

Banda de frecvență: 24.05 ... 24.25 GHz

Puterea de transmisie: 20 dBm (max.) EIRP

Producător și adresa:

Hella GmbH & Co. KGaA

Rixbecker Straße 75, 59552 Lippstadt, Germany

取得審驗證明之低功率射頻器材，非經核准，公司、商號或使用者均不得擅自變更頻率、
加大功率或變更原設計之特性及功能。
低功率射 頻器材之使用不得影響飛航安全及干擾合法通信;經發現有干擾現象時，應立即停用，
並改善至無干擾時方得繼續使用。
前述合法通信，指依電信管理 法規定作業之無線電通信。
低功率射頻器材須忍受合法通信或工業、科學及 醫療用電波輻射性電機設備之干擾。

Hereby, HELLA GmbH & Co. KGaA declares that the radio equipment type RS4 is in compliance with radio regulation 2017.

The full text of the UK declaration of conformity is available at the following internet address:

www.hella.com/suzuki

Technical information:

Frequency band: 24.05 ... 24.25 GHz

Transmission power: 20 dBm (max.) EIRP

Manufacturer and Address:

HELLA GmbH & Co. KGaA

Rixbecker Straße 75, 59552 Lippstadt, Germany

справжнім HELLA GmbH & Co. KGaA заявляє, що тип радіообладнання RS4 відповідає Технічному регламенту радіообладнання;

повний текст декларації про відповідність доступний на веб-сайті за такою адресою: www.hella.com/suzuki

Частотний діапазон: 24,05 – 24,25 ГГц

Потужність передачі: 20 дБм (макс.) EIRP

Transmitter:	Model: DNMWR011 Operation frequency: 76.5 GHz Maximum output power: 676 mW or less
Manufacturer:	DENSO CORPORATION
Address:	1-1, Showa-cho, Kariya-shi, Aichi-ken, 448-8661 Japan

Hereby, DENSO CORPORATION declares that the radio equipment type is in compliance with Directive 2014/53/EU.
The full text of the EU declaration of conformity is available at the following internet address:
https://www.denso.com/global/en/contact-us/doc/

DENSO CORPORATION vakuuttaa, että radiolaitetyyppi on direktiivin 2014/53/EU mukainen.
EU-vaatimustenmukaisuusvakuutuksen täysimittainen teksti on saatavilla seuraavassa internetosoitteessa:
https://www.denso.com/global/en/contact-us/doc/

Hierbij verklaar ik, DENSO CORPORATION, dat het type radioapparatuur conform is met Richtlijn 2014/53/EU.
De volledige tekst van de EU-conformiteitsverklaring kan worden geraadpleegd op het volgende internetadres:
https://www.denso.com/global/en/contact-us/doc/

Le soussigné, DENSO CORPORATION, déclare que l'équipement radioélectrique du type est conforme à la directive 2014/53/UE.
Le texte complet de la déclaration UE de conformité est disponible à l'adresse internet suivante:
https://www.denso.com/global/en/contact-us/doc/

Härmed försäkrar DENSO CORPORATION att denna typ av radioutrustning överensstämmer med direktiv 2014/53/EU.
Den fullständiga texten till EU-försäkran om överensstämmelse finns på följande webbadress:
https://www.denso.com/global/en/contact-us/doc/

Hermed erklærer DENSO CORPORATION, at radioudstyrstypen er i overensstemmelse med direktiv 2014/53/EU.
EU-overensstemmelseserklæringens fulde tekst kan findes på følgende internetadresse:
https://www.denso.com/global/en/contact-us/doc/

Hiermit erklärt DENSO CORPORATION, dass der Funkanlagentyp der Richtlinie 2014/53/EU entspricht.
Der vollständige Text der EU-Konformitätserklärung ist unter der folgenden Internetadresse verfügbar:
https://www.denso.com/global/en/contact-us/doc/

Με την παρούσα ο/η DENSO CORPORATION, δηλώνει ότι ο ραδιοεξοπλισμός πληροί την οδηγία 2014/53/ΕΕ.
Το πλήρες κείμενο της δήλωσης συμμόρφωσης ΕΕ διατίθεται στην ακόλουθη ιστοσελίδα στο διαδίκτυο:
https://www.denso.com/global/en/contact-us/doc/

Il fabbricante, DENSO CORPORATION, dichiara che il tipo di apparecchiatura radio è conforme alla direttiva 2014/53/UE.
Il testo completo della dichiarazione di conformità UE è disponibile al seguente indirizzo Internet:
https://www.denso.com/global/en/contact-us/doc/

Por la presente, DENSO CORPORATION declara que el tipo de equipo radioeléctrico es conforme con la Directiva 2014/53/UE.
El texto completo de la declaración UE de conformidad está disponible en la dirección Internet siguiente:
https://www.denso.com/global/en/contact-us/doc/

O(a) abaixo assinado(a) DENSO CORPORATION declara que o presente tipo de equipamento de rádio está em conformidade com a Diretiva 2014/53/UE.
O texto integral da declaração de conformidade está disponível no seguinte endereço de Internet:
https://www.denso.com/global/en/contact-us/doc/

B'dan, DENSO CORPORATION, niddikjara li dan it-tip ta' tagħmir tar-radju huwa konformi mad-Direttiva 2014/53/UE.
It-test kollu tad-dikjarazzjoni ta' konformità tal-UE huwa disponibbli f'dan l-indirizz tal-Internet li ġej:
https://www.denso.com/global/en/contact-us/doc/

Käesolevaga deklareerib DENSO CORPORATION, et käesolev raadioseadme tüüp vastab direktiivi 2014/53/EL nõuetele.
ELi vastavusdeklaratsiooni täielik tekst on kättesaadav järgmisel internetiaadressil:
https://www.denso.com/global/en/contact-us/doc/

DENSO CORPORATION igazolja, hogy a típusú rádióberendezés megfelel a 2014/53/EU irányelvnek.
Az EU-megfelelőségi nyilatkozat teljes szövege elérhető a következő internetes címen:
https://www.denso.com/global/en/contact-us/doc/

DENSO CORPORATION týmto vyhlasuje, že rádiové zariadenie typu je v súlade so smernicou 2014/53/EÚ.
Úplné EÚ vyhlásenie o zhode je k dispozícii na tejto internetovej adrese:
https://www.denso.com/global/en/contact-us/doc/

Tímto DENSO CORPORATION prohlašuje, že typ rádiového zařízení je v souladu se směrnicí 2014/53/EU.
Úplné znění EU prohlášení o shodě je k dispozici na této internetové adrese:
https://www.denso.com/global/en/contact-us/doc/

DENSO CORPORATION potrjuje, da je tip radijske opreme skladen z Direktivo 2014/53/EU.
Celotno besedilo izjave EU o skladnosti je na voljo na naslednjem spletnem naslovu:
https://www.denso.com/global/en/contact-us/doc/

Aš, DENSO CORPORATION, patvirtinu, kad radijo įrenginių tipas atitinka Direktyvą 2014/53/ES.
Visas ES atitikties deklaracijos tekstas prieinamas šiuo interneto adresu:
https://www.denso.com/global/en/contact-us/doc/

Ar šo DENSO CORPORATION deklarē, ka radioiekārta atbilst Direktīvai 2014/53/ES.
Pilns ES atbilstības deklarācijas teksts ir pieejams šādā interneta vietnē:
https://www.denso.com/global/en/contact-us/doc/

DENSO CORPORATION niniejszym oświadcza, że typ urządzenia radiowego jest zgodny z dyrektywą 2014/53/UE.
Pełny tekst deklaracji zgodności UE jest dostępny pod następującym adresem internetowym:
https://www.denso.com/global/en/contact-us/doc/

Hér með lýsir DENSO CORPORATION yfir því að er í samræmi við grunnkröfur og aðrar kröfur, sem gerðar eru í tilskipun 2014/53/EU.
Samræmisyfirlýsing er einnig aðgengileg á eftirfarandi vefslóð:
https://www.denso.com/global/en/contact-us/doc/

DENSO CORPORATION erklærer at er i overensstemmelse med direktiv 2014/53/EU.
Samsvarserklæringen i fulltekst er tilgjengelig på følgende internettadresse:
https://www.denso.com/global/en/contact-us/doc/

С настоящото DENSO CORPORATION декларира, че този тип радиосъоръжение е в съответствие с Директива 2014/53/ЕС.
Цялостният текст на ЕС декларацията за съответствие може да се намери на следния интернет адрес:
https://www.denso.com/global/en/contact-us/doc/

Prin prezenta, DENSO CORPORATION declară că tipul de echipamente radio este în conformitate cu Directiva 2014/53/UE.
Textul integral al declarației UE de conformitate este disponibil la următoarea adresă internet:
https://www.denso.com/global/en/contact-us/doc/

DENSO CORPORATION ovime izjavljuje da je radijska oprema tipa u skladu s Direktivom 2014/53/EU.
Cjeloviti tekst EU izjave o sukladnosti dostupan je na sljedećoj internetskoj adresi:
https://www.denso.com/global/en/contact-us/doc/

Овиме, DENSO CORPORATION изјављује да је радио опрема тип усаглашена са Директивом 2014/53/EU.
Цео текст ЕУ декларације о усаглашености доступам је на следећој интернет адреси:
https://www.denso.com/global/en/contact-us/doc/

Amb aquest document, DENSO CORPORATION declara que el tipus d'equipament radioelèctric es conforme a la Directiva 2014/53/UE.
El text complet de la declaració UE de conformitat està disponible en la següent adreça d'Internet:
https://www.denso.com/global/en/contact-us/doc/

İşbu belge; DENSO CORPORATION telsiz ekipmanı tipinin 2014/53/AB sayılı Direktif'e uygun olduğunu beyan eder.
AB uygunluk beyanının tam metni aşağıdaki internet adresinde mevcuttur:
https://www.denso.com/global/en/contact-us/doc/

Me anë të kësaj deklaratë, subjekti DENSO CORPORATION deklaron se pajisjet radio është në përputhje me këtë rregull teknik për pajisjet radio dhe fundore të komunikimeve elektronike.

Teksti i plotë i Deklaratës së Konformitetit është i disponueshëm në adresën e mëposhtme të internetit:

https://www.denso.com/global/en/contact-us/doc/

IL:VAT ID 40911612

חל איסור לבצע פעולות במכשיר שיש בהן כדי לשנות את תכונותיו האלחוטיות

של המכשיר ,ובכלל זה שינויי תוכנה ,החלפת אנטנה מקורית או הוספת אפשרות

לחיבור לאנטנה חיצונית ,בלא קבלת אישור משרד התקשורת ,בשל החשש

.להפרעות אלחוטיות

מוצר : מכ"מ התראה
סימן רשום : DENSO
שם היבואן: מכשירי תנועה ומכוניות (2004) בע" מ
כתובת היבואן: אריה שנקר 13 ראשון לציון, ת. ד. 4012
ארץ ייצור : ראה מוצר
דגם : DNMWR011
שנת ייצור : ראה מוצר

Este equipo opera a título secundario, consecuentemente, debe aceptar interferencias perjudiciales incluyendo equipos de la misma clase y puede no causar interferencias a sistemas operando a título primario.

Transmitter:	Model: DNMWR011
	Operation frequency: 76.5 GHz
	Maximum output power: 676 mW or less
Manufacturer:	DENSO CORPORATION
Address:	1-1, Showa-cho, Kariya-shi, Aichi-ken, 448-8661 Japan

Prin prezenta, DENSO CORPORATION declară că tipul de echipamente radio este în conformitate cu Reglementarea tehnică „Punerea la dispoziție pe piață a echipamentelor radio”.

Textul integral al declarației de conformitate este disponibil la următoarea adresă de Internet:

https://www.denso.com/global/en/contact-us/doc/

取得審驗證明之低功率射頻器材，非經核准，公司、商號或使用者均不得擅自變更頻率、加大功率或變更原設計之特性及功能。

低功率射頻器材之使用不得影響飛航安全及干擾合法通信；經發現有干擾現象時，應立即停用，並改善至無干擾時方得繼續使用。

前述合法通信，指依電信管理法規定作業之無線電通信。

低功率射頻器材須忍受合法通信或工業、科學及醫療用電波輻射性電機設備之干擾。

Complies with
IMDA Standards
DA107093

DENSO DNMWR011

Transmitter:	Model:DNMWR011 Operation frequency: 76.5 GHz Maximum output power: 676 mW or less
Manufacturer:	DENSO CORPORATION
Address:	1-1, Showa-cho, Kariya-shi, Aichi-ken, 448-8661 Japan

Hereby, DENSO CORPORATION declares that the radio equipment type is in compliance with the relevant statutory requirements.
The full text of the UK declaration of conformity is available at the following internet address:
https://www.denso.com/global/en/contact-us/doc/

Hereby, DENSO CORPORATION declares that the radio equipment type is in compliance with Directive 2014/53/EU.
The full text of the EU declaration of conformity is available at the following internet address:
https://www.denso.com/global/en/contact-us/doc/

UA RF: 3DENSFR11

модель: DNMWR011
смуга радіочастот: 76-77 ГГц
максимальна вихідна потужність: 676 мВт або менше
виробник: DENSO CORPORATION
адреса: 1-1, Showa-cho, Kariya-shi, Aichi-ken, 448-8661 Japan
справжнім DENSO CORPORATION заявляє, що тип радіообладнання відповідає Технічному регламенту радіообладнання;
повний текст декларації про відповідність доступний на веб-сайті за такою адресою:
https://www.denso.com/global/en/contact-us/doc/

Continental

CE

Manufacturer: Continental Automotive GmbH
Address: Seimensstrasse12 D-93055 Regensburg Germany
TEL : :49 941 790 8942 FAX : :49 941 790 998942

Radio Transmitter: *S180052024, TIS-15* and Radio Receiver: *40398036*

[Czech]	Tímto Continental prohlašuje, že typ rádiového zařízení S180052024/TIS-15/40398036 je v souladu se směrnicí 2014/53/EU. Úplné znění EU prohlášení o shodě je k dispozici na této internetové adrese: http://continental-homologation.com/suzuki
[Danish]	Hermed erklærer Continental, at radioudstyrstypen S180052024/TIS-15/40398036 er i overensstemmelse med direktiv 2014/53/EU. EU-overensstemmelseserklæringens fulde tekst kan findes på følgende internetadresse: http://continental-homologation.com/suzuki
[German]	Hiermit erklärt Continental, dass der Funkanlagentyp S180052024/TIS-15/40398036 der Richtlinie 2014/53/EU entspricht. Der vollständige Text der EU-Konformitätserklärung ist unter der folgenden Internetadresse verfügbar: http://continental-homologation.com/suzuki
[Estonian]	Käesolevaga deklareerib Continental, et käesolev raadioseadme tüüp S180052024/TIS-15/40398036 vastab direktiivi 2014/53/EL nõuetele. ELi vastavusdeklaratsiooni täielik tekst on kättesaadav järgmisel internetiaadressil: http://continental-homologation.com/suzuki
[English]	Hereby, Continental declares that the radio equipment type S180052024/TIS-15/40398036 is in compliance with Directive 2014/53/EU. The full text of the EU declaration of conformity is available at the following internet address: http://continental-homologation.com/suzuki
[Spanish]	Por la presente, Continental declara que el tipo de equipo radioeléctrico S180052024/TIS-15/40398036 es conforme con la Directiva 2014/53/UE. El texto completo de la declaración UE de conformidad est á disponible en la dirección Internet siguiente: http://continental-homologation.com/suzuki
[Greek]	Με την παρούσα ο/η Continental, δηλώνει ότι ο ραδιοεξοπλισμός S180052024/TIS-15/40398036 πληροί την οδηγία 2014/53/ΕΕ. Το πλήρες κείμενο της δήλωσης συμμόρφωσης ΕΕ διατίθεται στην ακόλο υθη ιστοσελίδα στο διαδίκτυο: http://continental-homologation.com/suzuki
[French]	Le soussigné, Continental, déclare que l'équipement radioélectrique du type S180052024/TIS-15/40398036 est conforme à la directive 2014/53/UE. Le texte complet de la déclaration UE de conformité est disponible à l'adresse internet suivante: http://continental-homologation.com/suzuki
[Italian]	Il fabbricante, Continental, dichiara che il tipo di apparecchiatura radio S180052024/TIS-15/40398036 è conforme alla direttiva 2014/53/UE. Il testo completo della dichiarazione di conformità UE è disponibile al seguente indirizzo Internet: http://continental-homologation.com/suzuki
[Latvian]	Ar šo Continental deklarē, ka radioiekārta S180052024/TIS-15/40398036 atbilst Direktīvai 2014/53/ES. Pilns ES atbilstības deklarācijas teksts ir pieejams šādā interneta vietnē: http://continental-homologation.com/suzuki
[Lithuanian]	Aš, Continental, patvirtinu, kad radijo įrenginių tipas S180052024/TIS-15/40398036 atitinka Direktyvą 2014/53/ES. Visas ES atitikties deklaracijos tekstas prieinamas šiuo interneto adresu: http://continental-homologation.com/suzuki
[Dutch]	Hierbij verklaar ik, Continental, dat het type radioapparatuur S180052024/TIS-15/40398036 conform is met Richtlijn 2014/53/EU. De volledige tekst van de EU-conformiteitsverklaring kan worden geraadpleegd op het volgende internetadres: http://continental-homologation.com/suzuki
[Maltese]	B'dan, Continental, niddikjara li dan it-tip ta' tagħmir tar-radju S180052024/TIS-15/40398036 huwa konformi mad-Direttiva 2014/53/UE. It-test kollu tad-dikjarazzjoni ta' konformità tal-UE huwa disponibbli f'dan l-indirizz tal-Internet li ġej: http://continental-homologation.com/suzuki
[Hungarian]	Continental igazolja, hogy a S180052024/TIS-15/40398036 típusú rádióberendezés megfelel a 2014/53/EU irányelvnek. Az EU-megfelelőségi nyilatkozat teljes szövege elérhető a következő internetes cí men: http://continental-homologation.com/suzuki
[Polish]	Continental niniejszym oświadcza, że typ urządzenia radiowego S180052024/TIS-15/40398036 jest zgodny z dyrektywą 2014/53/UE. Pełny tekst deklaracji zgodności UE jest dostępny pod następującym adresem internetowym: http://continental-homologation.com/suzuki
[Portuguese]	O(a) abaixo assinado(a) Continental declara que o presente tipo de equipamento de rádio S180052024/TIS-15/40398036 está em conformidade com a Diretiva 2014/53/UE. O texto integral da declaração de conformidade está disponível no seguinte endereço de Internet: http://continental-homologation.com/suzuki
[Slovenian]	Continental potrjuje, da je tip radijske opreme S180052024/TIS-15/40398036 skladen z Direktivo 2014/53/EU. Celotno besedilo izjave EU o skladnosti je na voljo na naslednjem spletnem naslovu: http://continental-homologation.com/suzuki
[Slovak]	Continental týmto vyhlasuje, že rádiové zariadenie typu S180052024/TIS-15/40398036 je v súlade so smernicou 2014/53/EÚ. Úplné EÚ vyhlásenie o zhode je k dispozícii na tejto internetovej adrese: http://continental-homologation.com/suzuki
[Finish]	Continental vakuuttaa, että radiolaitetyyppi S180052024/TIS-15/40398036 on direktiivin 2014/53/EU mukainen. EU-vaatimustenmukaisuusvakuutuksen täysimittainen teksti on saatavilla seuraavassa internetosoitteessa: http://continental-homologation.com/suzuki
[Swedish]	Härmed försäkrar Continental att denna typ av radioutrustning S180052024/TIS-15/40398036 överensstämmer med direktiv 2014/53/EU. Den fullständiga texten till EU-försäkran om överensstämmelse finns på följande webbadress: http://continental-homologation.com/suzuki
[Icelandic]	Hér með lýsir Continental yfir því að S180052024/TIS-15/40398036 er í samræmi við grunnkröfur og aðrar kröfur, sem gerðar eru í tilskipun 2014/53/EC. The fullur texti af ESB-samræmisyfirlýsing er í boði á eftirfarandi veffangi: http://continental-homologation.com/suzuki
[Norwegian]	Continental erklærer herved at utstyret S180052024/TIS-15/40398036 er i samsvar med de grunnleggende krav og øvrige relevante krav i direktiv 2014/53/EU. Den fullstendige teksten i EU-deklarasjon finnes på følgende internettadresse: http://continental-homologation.com/suzuki
[Turkish]	İşburada Continental, S180052024/TIS-15/40398036 ile Direktif 2014/53/AB'nin uyumlu olduğunu beyan eder. AB uygunluk beyanının tam metni, aşağıdaki internet adresinde mevcuttur: http://continental-homologation.com/suzuki
[Romanian]	Prin prezenta, Continental declară că tipul de echipamente radio S180052024/TIS-15/40398036 este în conformitate cu Directiva 2014/53/UE. Textul integral al declarației UE de conformitate este disponibil la următoarea adresă internet: http://continental-homologation.com/suzuki
[Bulgarian]	С настоящото Continental декларира, че този тип радиосъоръжение S180052024/TIS-15/40398036 е в съответствие с Директива 2014/53/ЕС. Цялостният текст на ЕС декларацията за съответств ие може да се намери на следния интернет адрес: http://continental-homologation.com/suzuki
[Croatian]	Continental ovime izjavljuje da je radijska oprema tipa S180052024/TIS-15/40398036 u skladu s Direktivom 2014/53/EU. Cjeloviti tekst EU izjave o sukladnosti dostupan je na sljedećoj internetskoj adresi: http://continental-homologation.com/suzuki
[Crnogorski jezik]	Ovim, Continental, izjavljuje da je tip radio opreme S180052024/TIS-15/40398036 u skladu sa Direktivom 2014/53/EU. Kompletan tekst EU izjave o usklađenosti nalazi se na sljedećoj Internet adresi: http://continental-homologation.com/suzuki
[Macedonian]	Prin prezenta, Continental declară că tipul de echipamente radio S180052024/TIS-15/40398036 este în conformitate cu Directiva 2014/53/UE. Textul integral al declarației UE de conformitate este disponibil la următoarea adresă internet: http://continental-homologation.com/suzuki

CAUTION - Do not exposed to excessive heat such as sunshine, fire or the like.

S180052024 / TIS-15 : Frequency band : 433.92MHz
Maximum radio-frequency power : <10mW e.r.p

Continental

CE

Radio Receiver: *TIS-i400*

Manufacturer: Continental Automotive GmbH
Address: Seimensstrasse12 D-93055 Regensburg Germany
TEL : :49 941 790 8942 FAX : :49 941 790 998942

[Czech]	Tímto Continental prohlašuje, že typ rádiového zařízení TIS-i400 je v souladu se směrnicí 2014/53/EU. Úplné znění EU prohlášení o shodě je k dispozici na této internetové adrese: http://continental-homologation.com/suzuki
[Danish]	Hermed erklærer Continental, at radioudstyrstypen TIS-i400 er i overensstemmelse med direktiv 2014/53/EU. EU-overensstemmelseserklæringens fulde tekst kan findes på følgende internetadresse: http://continental-homologation.com/suzuki
[German]	Hiermit erklärt Continental, dass der Funkanlagentyp TIS-i400 der Richtlinie 2014/53/EU entspricht. Der vollständige Text der EU-Konformitätserklärung ist unter der folgenden Internetadresse verfügbar: http://continental-homologation.com/suzuki
[Estonian]	Käesolevaga deklareerib Continental, et käesolev raadioseadme tüüp TIS-i400 vastab direktiivi 2014/53/EL nõuetele. ELi vastavusdeklaratsiooni täielik tekst on kättesaadav järgmisel internetiaadressil: http://continental-homologation.com/suzuki
[English]	Hereby, Continental declares that the radio equipment type TIS-i400 is in compliance with Directive 2014/53/EU. The full text of the EU declaration of conformity is available at the following internet address: http://continental-homologation.com/suzuki
[Spanish]	Por la presente, Continental declara que el tipo de equipo radioeléctrico TIS-i400 es conforme con la Directiva 2014/53/UE. El texto completo de la declaración UE de conformidad está disponible en la dirección Internet siguiente: http://continental-homologation.com/suzuki
[Greek]	Με την παρούσα ο/η Continental, δηλώνει ότι ο ραδιοεξοπλισμός TIS-i400 πληροί την οδηγία 2014/53/ΕΕ. Το πλήρες κείμενο της δήλωσης συμμόρφωσης ΕΕ διατίθεται στην ακόλουθη ιστοσελίδα στο διαδίκτυο: http://continental-homologation.com/suzuki
[French]	Le soussigné, Continental, déclare que l'équipement radioélectrique du type TIS-i400 est conforme à la directive 2014/53/UE. Le texte complet de la déclaration UE de conformité est disponible à l'adresse internet suivante: http://continental-homologation.com/suzuki
[Italian]	Il fabbricante, Continental, dichiara che il tipo di apparecchiatura radio TIS-i400 è conforme alla direttiva 2014/53/UE. Il testo completo della dichiarazione di conformità UE è disponibile al seguente indirizzo Internet: http://continental-homologation.com/suzuki
[Latvian]	Ar šo Continental deklarē, ka radioiekārta TIS-i400 atbilst Direktīvai 2014/53/ES. Pilns ES atbilstības deklarācijas teksts ir pieejams šādā interneta vietnē: http://continental-homologation.com/suzuki
[Lithuanian]	Aš, Continental, patvirtinu, kad radijo įrenginių tipas TIS-i400 atitinka Direktyvą 2014/53/ES. Visas ES atitikties deklaracijos tekstas prieinamas šiuo interneto adresu: http://continental-homologation.com/suzuki
[Dutch]	Hierbij verklaar ik, Continental, dat het type radioapparatuur TIS-i400 conform is met Richtlijn 2014/53/EU. De volledige tekst van de EU-conformiteitsverklaring kan worden geraadpleegd op het volgende internetadres: http://continental-homologation.com/suzuki
[Maltese]	B'dan, Continental, niddikjara li dan it-tip ta' tagħmir tar-radju TIS-i400 huwa konformi mad-Direttiva 2014/53/UE. It-test kollu tad-dikjarazzjoni ta' konformità tal-UE huwa disponibbli f'dan l-indirizz tal-Internet li ġej: http://continental-homologation.com/suzuki
[Hungarian]	Continental igazolja, hogy a TIS-i400 típusú rádióberendezés megfelel a 2014/53/EU irányelvnek. Az EU-megfelelőségi nyilatkozat teljes szövege elérhető a következő internetes címen: http://continental-homologation.com/suzuki
[Polish]	Continental niniejszym oświadcza, że typ urządzenia radiowego TIS-i400 jest zgodny z dyrektywą 2014/53/UE. Pełny tekst deklaracji zgodności UE jest dostępny pod następującym adresem internetowym: http://continental-homologation.com/suzuki
[Portuguese]	O(a) abaixo assinado(a) Continental declara que o presente tipo de equipamento de rádio TIS-i400 está em conformidade com a Diretiva 2014/53/UE. O texto integral da declaração de conformidade está disponível no seguinte endereço de Internet: http://continental-homologation.com/suzuki
[Slovenian]	Continental potrjuje, da je tip radijske opreme TIS-i400 skladen z Direktivo 2014/53/EU. Celotno besedilo izjave EU o skladnosti je na voljo na naslednjem spletnem naslovu: http://continental-homologation.com/suzuki
[Slovak]	Continental týmto vyhlasuje, že rádiové zariadenie typu TIS-i400 je v súlade so smernicou 2014/53/EÚ. Úplné EÚ vyhlásenie o zhode je k dispozícii na tejto internetovej adrese: http://continental-homologation.com/suzuki
[Finish]	Continental vakuuttaa, että radiolaitetyyppi TIS-i400 on direktiivin 2014/53/EU mukainen. EU-vaatimustenmukaisuusvakuutuksen täysimittainen teksti on saatavilla seuraavassa internetosoitteessa: http://continental-homologation.com/suzuki
[Swedish]	Härmed försäkrar Continental att denna typ av radioutrustning TIS-i400 överensstämmer med direktiv 2014/53/EU. Den fullständiga texten till EU-försäkran om överensstämmelse finns på följande webbadress: http://continental-homologation.com/suzuki
[Icelandic]	Hér með lýsir Continental yfir því að TIS-i400 er í samræmi við grunnkröfur og aðrar kröfur, sem gerðar eru í tilskipun 2014/53/EC. The fullur texti af ESB-samræmisyfirlýsing er í boði á eftirfarandi veffangi: http://continental-homologation.com/suzuki
[Norwegian]	Continental erklærer herved at utstyret TIS-i400 er i samsvar med de grunnleggende krav og øvrige relevante krav i direktiv 2014/53/EU. Den fullstendige teksten i EU-deklarasjon finnes på følgende internettadresse: http://continental-homologation.com/suzuki
[Turkish]	İşburada Continental, TIS-i400 ile Direktif 2014/53/AB'nin uyumlu olduğunu beyan eder. AB uygunluk beyanının tam metni, aşağıdaki internet adresinde mevcuttur: http://continental-homologation.com/suzuki
[Romanian]	Prin prezenta, Continental declară că tipul de echipamente radio TIS-i400 este în conformitate cu Directiva 2014/53/UE. Textul integral al declarației UE de conformitate este disponibil la următoarea adresă internet: http://continental-homologation.com/suzuki
[Bulgarian]	С настоящото Continental декларира, че този тип радиосъоръжение TIS-i400 е в съответствие с Директива 2014/53/ЕС. Цялостният текст на ЕС декларацията за съответствие може да се намери на следния интернет адрес: http://continental-homologation.com/suzuki
[Croatian]	Continental ovime izjavljuje da je radijska oprema tipa TIS-i400 u skladu s Direktivom 2014/53/EU. Cjeloviti tekst EU izjave o sukladnosti dostupan je na sljedećoj internetskoj adresi: http://continental-homologation.com/suzuki
[Crnogorski jezik]	Ovim, Continental, izjavljuje da je tip radio opreme TIS-i400 u skladu sa Direktivom 2014/53/EU. Kompletan tekst EU izjave o usklađenosti nalazi se na sljedećoj Internet adresi: http://continental-homologation.com/suzuki
[Macedonian]	Prin prezenta, Continental declară că tipul de echipamente radio TIS-i400 este în conformitate cu Directiva 2014/53/UE. Textul integral al declarației UE de conformitate este disponibil la următoarea adresă internet: http://continental-homologation.com/suzuki

CAUTION - Do not exposed to excessive heat such as sunshine, fire or the like.

Internal

Continental

UK CA

Radio Receiver: *TIS-i400*

Manufacturer: Continental Automotive GmbH
Address: Seimensstrasse12 D-93055 Regensburg Germany
TEL : :49 941 790 8942 FAX : :49 941 790 998942

[English]	Hereby, Continental declares that the radio equipment type TIS-i400 is in compliance with radio regulation 2017. The full text of the UK declaration of conformity is available at the following internet address: http://continental-homologation.com/suzuki

CAUTION - Do not exposed to excessive heat such as sunshine, fire or the like.

Continental

UK CA

Radio Transmitter: *S180052024, TIS-15* and Radio Receiver: *P61M0*

Manufacturer: Continental Automotive GmbH
Address: Seimensstrasse12 D-93055 Regensburg Germany
TEL : :49 941 790 8942 FAX : :49 941 790 998942

[English]	Hereby, Continental declares that the radio equipment type S180052024/TIS-15/P61M0 is in compliance with Directive 2017 No. 1206. The full text of the UK declaration of conformity is available at the following internet address: http://continental-homologation.com/suzuki

CAUTION - Do not exposed to excessive heat such as sunshine, fire or the like.

S180052024 / TIS-15 : Frequency band : 433.92MHz
Maximum radio-frequency power : <10mW e.r.p

Internal

CAUTION - Danger of explosion if battery is incorrectly replaced. Replace only with the same or equivalent type.

CAUTION - Do not exposed to excessive heat such as sunshine, fire or the like, as there is a risk of explosion or leak of flammable liquid or gas, includ use, storage and transportation.

CAUTION - Do not use in / store in / bring into environment of extremely high temperature or extremely low pressure due to the very high altitude. Dispose of used batteries according to the instructions. Do not attempt to burn, crush, or cut used . It can cause an explosion or leak of flammable liquid or gas.

Marelli Corporation.
2-19-4, Miyahara-cho, Kita-ku, Saitama-shi, Saitama-ken, 331-0812, Japan
Phone : +81-48-660-2111

[English]	Hereby, Marelli Corporation., declares that the radio equipment type K68P2/B76MC/S57L0/I76M0/I68P0/R57L1/TS008/T61M0/K62S0/K68P4/K81RA/K63T0/K67T0/K67TA/P55T0/R55T0 is in compliance with Directive 2014/53/EU. The full text of the EU declaration of conformity is available at the following internet address: https://www.marelli-corporation.com/en/products/red-doc/
	Hereby,Marelli Corporation., declares that the radio equipment type K68P2/S57L0/I68P0/R57L1/TS008/T61M0/K63T0/K67T0/P55T0/R55T0 is in compliance with the relevant statutory requirements. The full text of the declaration of conformity is available at the following internet address: https://www.marelli-corporation.com/en/products/red-doc/
[Dutch]	Hierbij verklaar ik, Marelli Corporation., dat het type radioapparatuur K68P2/B76MC/S57L0/I76M0/I68P0/R57L1/TS008/T61M0/K62S0/K68P4/K81RA/K63T0/K67T0/K67TA/P55T0/R55T0 conform is met Richtlijn 2014/53/EU. De volledige tekst van de EU-conformiteitsverklaring kan worden geraadpleegd op het volgende internetadres: https://www.marelli-corporation.com/en/products/red-doc/
[German]	Hiermit erklärt Marelli Corporation., dass der Funkanlagentyp K68P2/B76MC/S57L0/I76M0/I68P0/R57L1/TS008/T61M0/K62S0/K68P4/K81RA/K63T0/K67T0/K67TA/P55T0/R55T0 der Richtlinie 2014/53/EU entspricht. Der vollständige Text der EU-Konformitätserklärung ist unter der folgenden Internetadresse verfügbar: https://www.marelli-corporation.com/en/products/red-doc/
[French]	Le soussigné, Marelli Corporation., déclare que l'équipement radioélectrique du type K68P2/B76MC/S57L0/I76M0/I68P0/R57L1/TS008/T61M0/K62S0/K68P4/K81RA/K63T0/K67T0/K67TA/P55T0/R55T0 est conforme à la directive 2014/53/UE. Le texte complet de la déclaration UE de conformité est disponible à l'adresse internet suivante: https://www.marelli-corporation.com/en/products/red-doc/
[Spanish]	Por la presente, Marelli Corporation., declara que el tipo de equipo radioeléctrico K68P2/B76MC/S57L0/I76M0/I68P0/R57L1/TS008/T61M0/K62S0/K68P4/K81RA/K63T0/K67T0/K67TA/P55T0/R55T0 es conforme con la Directiva 2014/53/UE. El texto completo de la declaración UE de conformidad está disponible en la dirección Internet siguiente: https://www.marelli-corporation.com/en/products/red-doc/
[Bulgarian]	С настоящото Marelli Corporation., декларира, че този тип радиосъоръжение K68P2/B76MC/S57L0/I76M0/I68P0/R57L1/TS008/T61M0/K62S0/K68P4/K81RA/K63T0/K67T0/K67TA/P55T0/R55T0 е в съответствие с Директива 2014/53/ЕС. Цялостният текст на ЕС декларацията за съответствие може да се намери на следния интернет адрес:https://www.marelli-corporation.com/en/products/red-doc/
[Greek]	Με την παρούσα εγώ Marelli Corporation., δηλώνει ότι ο ραδιοεξοπλισμός K68P2/B76MC/S57L0/I76M0/I68P0/R57L1/TS008/T61M0/K62S0/K68P4/K81RA/K63T0/K67T0/K67TA/P55T0/R55T0 πληροί την οδηγία 2014/53/ΕΕ. Το πλήρες κείμενο της δήλωσης συμμόρφωσης ΕΕ διατίθεται στην ακόλουθη ιστοσελίδα στο διαδίκτυο: https://www.marelli-corporation.com/en/products/red-doc/
[Czech]	Tímto Marelli Corporation., prohlašuje, že typ rádiového zařízení K68P2/B76MC/S57L0/I76M0/I68P0/R57L1/TS008/T61M0/K62S0/K68P4/K81RA/K63T0/K67T0/K67TA/P55T0/R55T0 je v souladu se směrnicí 2014/53/EU. Úplné znění EU prohlášení o shodě je k dispozici na této internetové adrese: https://www.marelli-corporation.com/en/products/red-doc/
[Danish]	Hermed erklærer Marelli Corporation., at radioudstyrstypen K68P2/B76MC/S57L0/I76M0/I68P0/R57L1/TS008/T61M0/K62S0/K68P4/K81RA/K63T0/K67T0/K67TA/P55T0/R55T0 er i overensstemmelse med direktiv 2014/53/EU. EU-overensstemmelseserklæringens fulde tekst kan findes på følgende internetadresse: https://www.marelli-corporation.com/en/products/red-doc/
[Italian]	P4Il fabbricante, Marelli Corporation., dichiara che il tipo di apparecchiatura radio K68P2/B76MC/S57L0/I76M0/I68P0/R57L1/TS008/T61M0/K62S0/K68P4/K81RA/K63T0/K67T0/K67TA/P55T0/R55T0 è conforme alla direttiva 2014/53/UE. Il testo completo della dichiarazione di conformità UE è disponibile al seguente indirizzo Internet: https://www.marelli-corporation.com/en/products/red-doc/
[Portuguese]	O(a) abaixo assinado(a) Marelli Corporation., declara que o presente tipo de equipamento de rádio K68P2/B76MC/S57L0/I76M0/I68P0/R57L1/TS008/T61M0/K62S0/K68P4/K81RA/K63T0/K67T0/K67TA/P55T0/R55T0 está em conformidade com a Diretiva 2014/53/UE. O texto integral da declaração de conformidade está disponível no seguinte endereço de Internet: https://www.marelli-corporation.com/en/products/red-doc/
[Finnish]	Marelli Corporation., vakuuttaa, että radiolaitetyyppi K68P2/B76MC/S57L0/I76M0/I68P0/R57L1/TS008/T61M0/K62S0/K68P4/K81RA/K63T0/K67T0/K67TA/P55T0/R55T0 on direktiivin 2014/53/EU mukainen. EU-vaatimustenmukaisuusvakuutuksen täysimittainen teksti on saatavilla seuraavassa internetosoitteessa: https://www.marelli-corporation.com/en/products/red-doc/
[Swedish]	Härmed försäkrar Marelli Corporation., att denna typ av radioutrustning K68P2/B76MC/S57L0/I76M0/I68P0/R57L1/TS008/T61M0/K62S0/K68P4/K81RA/K63T0/K67T0/K67TA/P55T0/R55T0 överensstämmer med direktiv 2014/53/EU. Den fullständiga texten till EU-försäkran om överensstämmelse finns på följande webbadress: https://www.marelli-corporation.com/en/products/red-doc/
[Polish]	Marelli Corporation., niniejszym oświadcza, że typ urządzenia radiowego K68P2/B76MC/S57L0/I76M0/I68P0/R57L1/TS008/T61M0/K62S0/K68P4/K81RA/K63T0/K67T0/K67TA/P55T0/R55T0 jest zgodny z dyrektywą 2014/53/UE. Pełny tekst deklaracji zgodności UE jest dostępny pod następującym adresem internetowym: https://www.marelli-corporation.com/en/products/red-doc/
[Hungarian]	Marelli Corporation., igazolja, hogy a K68P2/B76MC/S57L0/I76M0/I68P0/R57L1/TS008/T61M0/K62S0/K68P4/K81RA/K63T0/K67T0/K67TA/P55T0/R55T0 típusú rádióberendezés megfelel a 2014/53/EU irányelvnek. Az EU-megfelelőségi nyilatkozat teljes szövege elérhető a következő internetes címen: https://www.marelli-corporation.com/en/products/red-doc/
[Slovak]	Marelli Corporation., týmto vyhlasuje, že rádiové zariadenie typu K68P2/B76MC/S57L0/I76M0/I68P0/R57L1/TS008/T61M0/K62S0/K68P4/K81RA/K63T0/K67T0/K67TA/P55T0/R55T0 je v súlade so smernicou 2014/53/EÚ. Úplné EU vyhlásenie o zhode je k dispozícii na tejto internetovej adrese: https://www.marelli-corporation.com/en/products/red-doc/
[Slovenian]	Marelli Corporation., potrjuje, da je tip radijske opreme K68P2/B76MC/S57L0/I76M0/I68P0/R57L1/TS008/T61M0/K62S0/K68P4/K81RA/K63T0/K67T0/K67TA/P55T0/R55T0 skladen z Direktivo 2014/53/EU. Celotno besedilo izjave EU o skladnosti je na voljo na naslednjem spletnem naslovu: https://www.marelli-corporation.com/en/products/red-doc/
[Estonian]	Käesolevaga deklareerib Marelli Corporation., et käesolev raadioseadme tüüp K68P2/B76MC/S57L0/I76M0/I68P0/R57L1/TS008/T61M0/K62S0/K68P4/K81RA/K63T0/K67T0/K67TA/P55T0/R55T0 vastab direktiivi 2014/53/EL nõuetele. Koopia vastavusdeklaratsioon on saadaval järgmistes kohtades. ELi vastavusdeklaratsiooni täielik tekst on kättesaadav järgmisel internetiaadressil: https://www.marelli-corporation.com/en/products/red-doc/
[Latvian]	Ar šo Marelli Corporation., deklarē, ka radioiekārta K68P2/B76MC/S57L0/I76M0/I68P0/R57L1/TS008/T61M0/K62S0/K68P4/K81RA/K63T0/K67T0/K67TA/P55T0/R55T0 atbilst Direktīvai 2014/53/ES. Pilns ES atbilstības deklarācijas teksts ir pieejams šādā interneta vietnē: https://www.marelli-corporation.com/en/products/red-doc/
[Lithuanian]	Aš, Marelli Corporation., patvirtinu, kad radijo įrenginių tipas K68P2/B76MC/S57L0/I76M0/I68P0/R57L1/TS008/T61M0/K62S0/K68P4/K81RA/K63T0/K67T0/K67TA/P55T0/R55T0 atitinka Direktyvą 2014/53/ES. Visas ES atitikties deklaracijos tekstas prieinamas šiuo interneto adresu: https://www.marelli-corporation.com/en/products/red-doc/
[Romanian]	Prin prezenta, Marelli Corporation., declară că tipul de echipamente radio K68P2/B76MC/S57L0/I76M0/I68P0/R57L1/TS008/T61M0/K62S0/K68P4/K81RA/K63T0/K67T0/K67TA/P55T0/R55T0 este în conformitate cu Directiva 2014/53/UE. Textul integral al declarației UE de conformitate este disponibil la următoarea adresă internet:https://www.marelli-corporation.com/en/products/red-doc/
[Croatian]	Marelli Corporation., ovime izjavljuje da je radijska oprema tipa K68P2/B76MC/S57L0/I76M0/I68P0/R57L1/TS008/T61M0/K62S0/K68P4/K81RA/K63T0/K67T0/K67TA/P55T0/R55T0 u skladu s Direktivom 2014/53/EU. Cjeloviti tekst EU izjave o sukladnosti dostupan je na sljedećoj internetskoj adresi:https://www.marelli-corporation.com/en/products/red-doc/
[Icelandic]	Hér, Marelli Corporation., lýsir yfir að radíóbúnaður tegund K68P2/B76MC/S57L0/I76M0/I68P0/R57L1/TS008/T61M0/K62S0/K68P4/K81RA/K63T0/K67T0/K67TA/P55T0/R55T0 er í samræmi við tilskipun 2014/53/ESB. The fullur texti af ESB-samræmisyfirlýsing er í boði á eftirfarandi veffangi: https://www.marelli-corporation.com/en/products/red-doc/
[Norwegian]	Herved Marelli Corporation., erklærer at radioutstyr type K68P2/B76MC/S57L0/I76M0/I68P0/R57L1/TS008/T61M0/K62S0/K68P4/K81RA/K63T0/K67T0/K67TA/P55T0/R55T0 er i samsvar med direktiv 2014/53/EU. Den fullstendige teksten i EU-erklæring er tilgjengelig på følgende internettadresse: https://www.marelli-corporation.com/en/products/red-doc/
[Macedonian]	Со ова, Marelli Corporation., изјавува дека типот на радио опрема K68P2/B76MC/S57L0/I76M0/I68P0/R57L1/TS008/T61M0/K62S0/K68P4/K81RA/K63T0/K67T0/K67TA/P55T0/R55T0 е во согласност со Директивата 2014/53/ЕУ. Целосниот текст на декларацијата на ЕУ за сообразност е достапна на следниот Постојано интернет адреса: https://www.marelli-corporation.com/en/products/red-doc/
[Turkish]	Bu vesile ile, Marelli Corporation., radyo cihazları tipi K68P2/B76MC/S57L0/I76M0/I68P0/R57L1/TS008/T61M0/K62S0/K68P4/K81RA/K63T0/K67T0/K67TA/P55T0/R55T0 Direktifi 2014/53/AB ile uyumlu olduğunu beyan eder. AB uyumu beyanının tam metni aşağıdaki internet adresinden edinilebilir: https://www.marelli-corporation.com/en/products/red-doc/
[Crnogorski jezik]	Ovime, Marelli Corporation., izjavljuje da je taj tip radio oprema K68P2/B76MC/S57L0/I76M0/I68P0/R57L1/TS008/T61M0/K62S0/K68P4/K81RA/K63T0/K67T0/K67TA/P55T0/R55T0 u skladu s Direktivom 2014/53/EU. Tekst deklaracije EU o sukladnosti dostupne su na sljedećoj internet adresi: https://www.marelli-corporation.com/en/products/red-doc/

This symbol is intended to alert the user to the presence of important operating and maintenance (servicing) instructions in the literature accompanying the appliance.

Type	Frequency Band	Maximum radio-frequency power	Type	Frequency Band	Maximum radio-frequency power
S57L0	125 kHz	55.3 dBuV/m@10m	TS008	433.92 MHz	80.0 dBuV/m@3m
I76M0	125 kHz	55.2 dBuV/m@10m	T61M0	433.92 MHz	90.0 dBuV/m@3m
I68P0	125 kHz	44.1 dBuV/m@10m	K63T0	125 kHz	42.9 dBuV/m@10m
K67T0	125 kHz	63.5 dBuV/m@10m	R55T0	433.92 MHz	83.0 dBuV/m@3m
P55T0	125 kHz	66.0 dBuV/m@10m			

WARNING
Do not ingest the battery, Chemical Burn Hazard
(The remote control supplied with) This product contains a coin/button cell battery. If the coin/button cell battery is swalloed, it can cause severe internal burns in just 2 hours and can lead to death.
Keep new and used batteries away from children.
If the battery compartment does not close securely, stop using the product and keep it away from children.
If you think batteries might have been swallowed or placed inside any part of the body, seek immediate medical attention

ALPS ALPS ELECTRIC CO., LTD. Engineering Headquarters
6-3-36, Nakazato, Furukawa, Osaki-city, Miyagi-pref, 989-6181, Japan
Phone +81 229-23-5111 Fax +81 229-22-6290

CE

[English]	Hereby, ALPS ELECTRIC CO.,LTD., declares that the radio equipment type TWK1A001/I61M0 is in compliance with Directive 2014/53/EU. The full text of the EU declaration of conformity is available at the following internet address: http://www.alps.com/products/e/re_list01.html
[Dutch]	Hierbij verklaar ik, ALPS ELECTRIC CO.,LTD., dat het type radioapparatuur TWK1A001/I61M0 conform is met Richtlijn 2014/53/EU. De volledige tekst van de EU-conformiteitsverklaring kan worden geraadpleegd op het volgende internetadres: http://www.alps.com/products/e/re_list01.html
[German]	Hiermit erklärt ALPS ELECTRIC CO.,LTD., dass der Funkanlagentyp TWK1A001/I61M0 der Richtlinie 2014/53/EU entspricht. Der vollständige Text der EU-Konformitätserklärung ist unter der folgenden Internetadresse verfügbar: http://www.alps.com/products/e/re_list01.html
[French]	Le soussigné, ALPS ELECTRIC CO.,LTD., déclare que l'équipement radioélectrique du type TWK1A001/I61M0 est conforme à la directive 2014/53/UE. Le texte complet de la déclaration UE de conformité est disponible à l'adresse internet suivante: http://www.alps.com/products/e/re_list01.html
[Spanish]	Por la presente, ALPS ELECTRIC CO.,LTD., declara que el tipo de equipo radioeléctrico TWK1A001/I61M0 es conforme con la Directiva 2014/53/UE. El texto completo de la declaración UE de conformidad está disponible en la dirección Internet siguiente: http://www.alps.com/products/e/re_list01.html
[Bulgarian]	С настоящото ALPS ELECTRIC CO.,LTD., декларира, че този тип радиосъоръжение TWK1A001/I61M0 е в съответствие с Директива 2014/53/ЕС. Цялостният текст на ЕС декларацията за съответствие може да се намери на следния интернет адрес: http://www.alps.com/products/e/re_list01.html
[Greek]	Με την παρούσα οίη ALPS ELECTRIC CO.,LTD., δηλώνει ότι ο ραδιοεξοπλισμός TWK1A001/I61M0 πλήροι την οδηγία 2014/53/ΕΕ. Το πλήρες κείμενο της δήλωσης συμμόρφωσης ΕΕ διατίθεται στην ακόλουθη ιστοσελίδα στο διαδίκτυο: http://www.alps.com/products/e/re_list01.html
[Czech]	Tímto ALPS ELECTRIC CO.,LTD., prohlašuje, že typ rádiového zařízení TWK1A001/I61M0 je v souladu se směrnicí 2014/53/EU. Úplné znění EU prohlášení o shodě je k dispozici na této internetové adrese: http://www.alps.com/products/e/re_list01.html
[Danish]	Hermed erklærer ALPS ELECTRIC CO.,LTD., at radioudstyrstypen TWK1A001/I61M0 er i overensstemmelse med direktiv 2014/53/EU. EU-overensstemmelseserklæringens fulde tekst kan findes på følgende internetadresse: http://www.alps.com/products/e/re_list01.html
[Italian]	Il fabbricante, ALPS ELECTRIC CO.,LTD., dichiara che il tipo di apparecchiatura radio TWK1A001/I61M0 è conforme alla direttiva 2014/53/UE. Il testo completo della dichiarazione di conformità UE è disponibile al seguente indirizzo Internet: http://www.alps.com/products/e/re_list01.html
[Portuguese]	O(a) abaixo assinado(a) ALPS ELECTRIC CO.,LTD., declara que o presente tipo de equipamento de rádio TWK1A001/I61M0 está em conformidade com a Diretiva 2014/53/UE. O texto integral da declaração de conformidade está disponível no seguinte endereço de Internet: http://www.alps.com/products/e/re_list01.html
[Finnish]	ALPS ELECTRIC CO.,LTD., vakuuttaa, että radiolaitetyyppi TWK1A001/I61M0 on direktiivin 2014/53/EU mukainen. EU-vaatimustenmukaisuusvakuutuksen täysimittainen teksti on saatavilla seuraavassa internetosoitteessa: http://www.alps.com/products/e/re_list01.html
[Swedish]	Härmed försäkrar ALPS ELECTRIC CO.,LTD., att denna typ av radioutrustning TWK1A001/I61M0 överensstämmer med direktiv 2014/53/EU. Den fullständiga texten till EU-försäkran om överensstämmelse finns på följande webbadress: http://www.alps.com/products/e/re_list01.html
[Polish]	ALPS ELECTRIC CO.,LTD., niniejszym oświadcza, że typ urządzenia radiowego TWK1A001/I61M0 jest zgodny z dyrektywą 2014/53/UE. Pełny tekst deklaracji zgodności UE jest dostępny pod następującym adresem internetowym: http://www.alps.com/products/e/re_list01.html
[Hungarian]	ALPS ELECTRIC CO.,LTD., igazolja, hogy a TWK1A001/I61M0 típusú rádióberendezés megfelel a 2014/53/EU irányelvnek. Az EU-megfelelőségi nyilatkozat teljes szövege elérhető a következő internetes címen: http://www.alps.com/products/e/re_list01.html
[Slovak]	ALPS ELECTRIC CO.,LTD., týmto vyhlasuje, že rádiové zariadenie typu TWK1A001/I61M0 je v súlade so smernicou 2014/53/EÚ. Úplné EÚ vyhlásenie o zhode je k dispozícii na tejto internetovej adrese: http://www.alps.com/products/e/re_list01.html
[Slovenian]	ALPS ELECTRIC CO.,LTD., potrjuje, da je tip radijske opreme TWK1A001/I61M0 skladen z Direktivo 2014/53/EU. Celotno besedilo izjave EU o skladnosti je na voljo na naslednjem spletnem naslovu: http://www.alps.com/products/e/re_list01.html
[Estonian]	Käesolevaga deklareerib ALPS ELECTRIC CO.,LTD., et käesolev raadioseadme tüüp TWK1A001/I61M0 vastab direktiivi 2014/53/EL nõuetele. Koopia vastavusdeklaratsioon on saadaval järgmistes kohtades. ELi vastavusdeklaratsiooni täielik tekst on kättesaadav järgmisel internetiaadressil: http://www.alps.com/products/e/re_list01.html
[Latvian]	Ar šo ALPS ELECTRIC CO.,LTD., deklarē, ka radiolekārta TWK1A001/I61M0 atbilst Direktīvai 2014/53/ES. Pilns ES atbilstības deklarācijas teksts ir pieejams šādā interneta vietnē: http://www.alps.com/products/e/re_list01.html
[Lithuanian]	Aš, ALPS ELECTRIC CO.,LTD., patvirtinu, kad radijo įrenginių tipas TWK1A001/I61M0 atitinka Direktyvą 2014/53/ES. Visas ES atitikties deklaracijos tekstas prieinamas šiuo interneto adresu: http://www.alps.com/products/e/re_list01.html
[Romanian]	Prin prezenta, ALPS ELECTRIC CO.,LTD., declară că tipul de echipamente radio TWK1A001/I61M0 este în conformitate cu Directiva 2014/53/UE. Textul integral al declarației UE de conformitate este disponibil la următoarea adresă internet: http://www.alps.com/products/e/re_list01.html
[Croatian]	ALPS ELECTRIC CO.,LTD., ovime izjavljuje da je radijska oprema tipa TWK1A001/I61M0 u skladu s Direktivom 2014/53/EU. Cjeloviti tekst EU izjave o sukladnosti dostupan je na sljedećoj internetskoj adresi: http://www.alps.com/products/e/re_list01.html
[Icelandic]	Hér, ALPS ELECTRIC CO.,LTD., lýsir yfir að radíóbúnaður tegund TWK1A001/I61M0 er í samræmi við tilskipun 2014/53/ESB. The fullur texti af ESB-samræmisyfirlýsing er í boði á eftirfarandi veffangi: http://www.alps.com/products/e/re_list01.html
[Norwegian]	Herved ALPS ELECTRIC CO.,LTD., erklærer at radioutstyr type TWK1A001/I61M0 er i samsvar med direktiv 2014/53/EU. Den fullstendige teksten i EU-erklæring er tilgjengelig på følgende internettadresse: http://www.alps.com/products/e/re_list01.html
[Macedonian]	Со оваа, ALPS ELECTRIC CO.,LTD., изјавува дека типот на радио опрема TWK1A001/I61M0 е во согласност со Директивата 2014/53/ЕУ. Целосниот текст на декларацијата на ЕУ за сообразност е достапна на следниот Постојано интернет адреса: http://www.alps.com/products/e/re_list01.html
[Turkish]	Bu vesile ile, ALPS ELECTRIC CO.,LTD., radyo cihazları tipi TWK1A001/I61M0 Direktifi 2014/53/AB ile uyumlu olduğunu beyan eder. AB uyumu beyanının tam metni aşağıdaki internet adresinden edinilebilir: http://www.alps.com/products/e/re_list01.html
[Crnogorski jezik]	Ovime, ALPS ELECTRIC CO.,LTD., izjavljuje da je taj tip radio oprema TWK1A001/I61M0 u skladu s Direktivom 2014/53/EU. Tekst deklaracije EU o sukladnosti dostupne su na sljedećoj internet adresi: http://www.alps.com/products/e/re_list01.html

UK CA

Hereby, ALPS ELECTRIC CO.,LTD., declares that the radio equipment type TWK1A001/I61M0 is in compliance with the relevant statutory requirements.
The full text of the UK declaration of conformity is available at the following internet address: http://www.alps.com/products/e/re_list01.html

Type	Frequency Band	Maximum radio-frequency power
TWK1A001	125 kHz	60.4 dBuV/m@10m
I61M0	125 kHz	61.2 dBuV/m@10m

Модель №.: **I61M0 / TWK1A001**

Назва виробника / зареєстрований товарний знак : ALPS ALPINE CO., LTD
Адреса виробника : 6-3-36, Nakazato, Furukawa, Osaki-city, Miyagi-pref,989-6181,JAPAN
Ім'я імпортера / адреса : Auto International
22-A Stepana Bandery Avenue, 04073 Kiev, Ukraine

Діапазон радіочастот, в якому працює устаткування

I61M0 модель	: 125 кГц
TWK1A001 модель	: 125 кГц

Максимальна потужність сигналу, що передається у діапазоні радіочастот, в якому працює устаткування

I61M0 модель	: 61.2дБмкВ/м на відстані 10м
TWK1A001 модель	: 60.4дБмкВ/м на відстані 10м

Проста декларація про відповідність

Цією декларацією ALPS ALPINE CO., LTD.. заявляє, що тип радіообладнання I61M0,TWK1A001 відповідає Технічномурегламенту радіообладнання;

повний текст декларації про відповідність доступний на веб-сайті за такою адресою:

https://www.alps.com/products/e/ukrain_list01.html

СЕРТИФІКАТ ЕКСПЕРТИЗИ ТИПУ
TYPE EXAMINATION CERTIFICATE

Зареєстровано в реєстрі органу з оцінки відповідності за № 889.14-СЕТ
Registered at the Record of conformity assessment body under №

Чинний від[1] *The date certification is granted*[1]	**15.11.2018**
Продукція / *Production*	**Радіопередавач системи контролю тиску в шині автомобіля**
Тип / Type	**S180052024**
Модель (і) / *Model (s)*	**S180052024**
Торгова назва або марка / *Brand name or trademark*	**торговельна марка Continental**
Виробник продукції / *Producer*	**"Continental Automotive GmbH", Німеччина, Siemensstrasse 12, D-93055 Regensburg, Germany** (найменування, адреса, код ЄДРПОУ (для вітчизняного) виробника) / (name, address of manufacturer)
Сертифікат видано / *Certificate is issued by the conformity assessment body*	**Призначеним органом з оцінки відповідності ДЕРЖАВНОГО ПІДПРИЄМСТВА "УКРАЇНСЬКИЙ НАУКОВО-ДОСЛІДНИЙ ІНСТИТУТ РАДІО І ТЕЛЕБАЧЕННЯ" (ОС УНДІРТ). Реєстраційний номер: UA.TR.028** 65026, м. Одеса, вул. Буніна, 31, тел.: (48) 740 71 27, 740 71 29; факс (48) 722 45 83, e-mail infoall@uniirt.com.ua, www.uniirt.com.ua

Висновки дослідження[2]**:**
за результатами експертизи технічної документації та підтвердних документів стосовно відповідності технічного проекту радіообладнання суттєвим вимогам "Технічного регламенту радіообладнання" (затверджений ПКМУ від 24 травня 2017 р. № 355) встановлено:

п.6 - щодо забезпечення захисту здоров'я, безпеки людей і домашніх тварин, захисту власності (п.6, абзац 1)	**відповідає**
п.6 - щодо відповідного рівня електромагнітної сумісності (п.6, абзац 2)	**відповідає**
п.7 - щодо зобов'язань ефективно використовувати і підтримувати ефективне використання радіочастотного ресурсу України у відповідній радіотехнології та уникати шкідливих завад (п.7)	**відповідає**
п.8 - щодо основних вимог	**до радіообладнання, стосовно якого здійснюється експертиза, на час складання цього сертифіката у нормативно-правових актах центрального органу виконавчої влади в галузі зв'язку не визначені відповідні вимоги**

Керівник органу з оцінки відповідності
Director of the conformity assessment body

А.М. Мельруд
(підпис, ініціали, прізвище / signature, initials, family name)

M.P. / Stamp

[1] *Цей сертифікат буде недійсним, у разі внесення виробником будь-яких змін до технічної документації або обладнання, про які не було повідомлено ОС УНДІРТ та не погоджено з ним. Порушення умов, що викладені у Додатку 2, є підставою для припинення дії сертифіката експертизи типу.*
[1] *This certificate will be void if the manufacturer makes any changes to the technical documentation or equipment without notification to CB UNIIRT and without mutual reconciliation. The violation of the conditions set out in Annex 2 form the grounds for cancellation of the Type Examination Certificate.*
[2] *Сертифікат складається з цього аркуша, Додатка 1 (інформація щодо обладнання) та Додатка 2 (зобов'язання виробника). Доповнення до цього сертифіката, що будуть оформлені після його реєстрації, оформлюються окремими додатками.*
[2] *The certificate shall consist of this sheet, Annex 1 (equipment information) and Annex 2 (manufacturer's obligation). Supplements to this Certificate, which will be issued after its registration, are to be legalized by separate Annexes.*

017727

Ф-03.02.07

ДОДАТОК 1
до сертифіката експертизи типу
Annex 1 to type examination certificate

№ 889.14-СЕТ

1	**Технічна документація та підтвердні документи**
1.1	**Назва архіву з технічною документацією: 889.14-СЕТ_вер_1**
1.2	**Зберігається у компанії: ТОВ "Радіо Тест Стандарт", Україна, код ЄДРПОУ 39205151**
1.3	**Адреса: 03115, м.Київ, вул. Львівська, 22-а, кв 135**
2	**Технічна документація містить такі елементи:** **загальний опис радіообладнання, технічний проект, результати проектних розрахунків, проведених перевірок, опис та необхідні пояснення для розуміння технічного проекту, протоколи випробувань, список застосованих стандартів, опис проведення і результати належного аналізу та оцінки ризиків**
3	**Ідентифікаційні характеристики:**
3.1	**Версія ПЗ (SW/FW version), яка впливає на дотримання суттєвих вимог: V1;**
3.2	**Версія виконання виробу (HW version), яка впливає на дотримання суттєвих вимог: V1;**
3.3	**Процесор, що виконує функції формування радіочастотних сигналів: ZA729057M0B;**
3.4	**Напруга живлення:** **вхідна напруга постійного струму 3,0 В;**
4	**Підтримка обладнанням радіотехнологій, що визначені Планом використання радіочастотного ресурсу України:**
4.1	**Технічні характеристики радіообладнання:** **- радіотехнологія згідно з Планом використання радіочастотного ресурсу України телеметрія та радіодистанційне керування;** **- діапазон частот, МГц 433,05...434,79;** **- максимальна вихідна потужність передавача, дБм (мВт) 0 (1,0);** **- клас випромінювання 100KF1D;** **- ширина смуги частот випромінювання передавача на рівні мінус 30 дБ - контрольна, не більше, кГц 300;** **- тип антени / коефіцієнт підсилення, не більше, дБі інтегрована / 2.**
5	**Умови застосування радіообладнання:** **Радіообладнання, що зазначене у цьому сертифікаті, відповідає узагальненим умовам застосування у сфері використання радіочастотного ресурсу України, які визначені РІ 42-2 (додатки 19 до рішення НКРЗІ від 12.01.2012 № 18) та експлуатація його здійснюється без оформлення дозволів УДЦР (рішення НКРЗІ від 23.12.2014 № 844, зареєстровано у Мін'юсті України 19.02.2015 за № 201/26646).**
6	**Випробування, застосовані стандарти та/або інші технічні специфікації**

Пункти "Технічного регламенту радіообладнання"	Стандарти	Номер протоколу випробувань	Випробувальна лабораторія (атестат акредитації)/ додаткова інформація
Застосовані стандарти з "Переліку національних стандартів, відповідність яким надає презумпцію відповідності радіообладнання суттєвим вимогам"			
п.7	-	-	-
Застосовані стандарти, що не включені до "Переліку національних стандартів, відповідність яким надає презумпцію відповідності радіообладнання суттєвим вимогам"			
п.6, абзац 1	ДСТУ EN 60950-1:2015 (тільки за пп. 1.2.3, 1.2.4, 1.7), ДСТУ EN 50385:2007	7005 від 08.02.2018	ВЦ РіТ УНДІРТ (2Н227)
п.6, абзац 2	ДСТУ EN 301 489-1:2014 (пп. 8.2, 9.2, 9.3) (з урахуванням ДСТУ ETSI EN 301 489-3:2009)	7005 від 08.02.2018	ВЦ РіТ УНДІРТ (2Н227)
п.7	ДСТУ ETSI EN 300 220-2:2012, ETSI EN 300 220-2 V2.3.1	7005 від 08.02.2018	ВЦ РіТ УНДІРТ (2Н227)

Керівник органу з оцінки відповідності
Director of the conformity assessment body

А.М. Мільруд
(підпис, ініціали, прізвище) / (signature, initials, family name)

М.П. / Stamp

017728

Ф-03.05.04-1

ДОДАТОК 2
до сертифіката експертизи типу

Annex 2 to type examination certificate

№ 889.14-СЕТ

ПОЧАТОК

Інформація щодо зобов'язань Виробника відповідно до Технічного регламенту радіообладнання (затверджено постановою Кабінету Міністрів України від 24 травня 2017 р. № 355) **та відповідні пункти Directive 2014/53/EU.**

Information on the Manufacturer's obligations, imposed by the provisions of Technical Regulation of Radio Equipment** (approved by the Decree of the Cabinet of Ministers of Ukraine, № 355 of May 24, 2017) **and Radio Equipment Directive 2014/53/EU, Articles (Annex, Module) which comply the appropriate articles of the Technical Regulation of Radio Equipment

Пункти Технічного регламенту радіообладнання	***Radio Equipment Directive 2014/53/EU, Articles (Annex, Module) which comply the appropriate articles of the Technical Regulation of Radio Equipment***
22. Виробники повинні зберігати технічну документацію та декларацію про відповідність протягом 10 років після введення в обіг останньої одиниці радіообладнання.	***Article 10.4:*** *Manufacturers shall keep the technical documentation and the EU declaration of conformity for 10 years after the radio equipment has been placed on the market.*
24. Виробники повинні гарантувати, що радіообладнання, яке вони надають на ринку, має позначення типу, моделі, партії або серійного номера тощо, що дасть змогу його ідентифікувати, або у разі неможливості або невиправданості через характер радіообладнання це зазначити надається інформація на пакуванні або супровідних документах.	***Article 10.6:*** *Manufacturers shall ensure that radio equipment which they have placed on the market bears a type, batch or serial number or other element allowing its identification, or, where the size or nature of the radio equipment does not allow it, that the required information is provided on the packaging, or in a document accompanying the radio equipment.*
25. Виробники повинні зазначити на радіообладнанні назву своєї компанії, зареєстровану торгову назву або зареєстровану торгову марку та поштову адресу, за якою з ними можна зв'язатися, або, якщо розмір або характер радіообладнання не дає змоги це зробити, - на упаковці радіообладнання або в супровідному документі. Зазначається лише одна адреса, за якою можна зв'язатися з виробником. Контактні дані наводяться відповідно до закону про порядок застосування мов.	***Article 10.7:*** *Manufacturers shall indicate on the radio equipment their name, registered trade name or registered trade mark and the postal address at which they can be contacted or, where the size or nature of radio equipment does not allow it, on its packaging, or in a document accompanying the radio equipment. The address shall indicate a single point at which the manufacturer can be contacted. The contact details shall be in a language easily understood by end-users and market surveillance authorities.*
26. Виробники повинні забезпечити супроводження радіообладнання інструкціями та інформацією про безпеку відповідно до закону про порядок застосування мов. Інструкції повинні включати інформацію, необхідну для використання радіообладнання відповідно до його призначення. Така інформація містить за наявності опис компонентів та аксесуарів, у тому числі програмного забезпечення, які дають змогу радіообладнанню працювати за призначенням. Такі інструкції та вказівки з техніки безпеки, а також будь-яке маркування повинні бути чіткими, зрозумілими і розбірливими. Інструкція до радіообладнання, яке призначене для випромінювання радіохвиль, додатково повинна містити: смугу (смуги) радіочастот, в якій (в яких) працює радіообладнання; максимальну потужність випромінювання в смузі (смугах) радіочастот, в якій (в яких) працює радіообладнання.	***Article 10.8:*** *Manufacturers shall ensure that the radio equipment is accompanied by instructions and safety information in a language which can be easily understood by consumers and other end-users, as determined by the Member State concerned. Instructions shall include the information required to use radio equipment in accordance with its intended use. Such information shall include, where applicable, a description of accessories and components, including software, which allow the radio equipment to operate as intended. Such instructions and safety information, as well as any labelling, shall be clear, understandable and intelligible.* *The following information shall also be included in the case of radio equipment intentionally emitting radio waves:* *(a) frequency band(s) in which the radio equipment operates;* *(b) maximum radio frequency power transmitted in the frequency band(s) in which the radio equipment operates.*

Керівник органу з оцінки відповідності
Director of the conformity assessment body

А. М. Мільруд
(підпис, ініціали, прізвище) / (signature, initials, family name)

М.П. / Stamp

Ф-03.05.04-1

ДОДАТОК 2
до сертифіката експертизи типу
Annex 2 to type examination certificate

№ 889.14-СЕТ

ЗАКІНЧЕННЯ

Пункти Технічного регламенту радіообладнання	***Radio Equipment Directive 2014/53/EU, Articles (Annex, Module) which comply the appropriate articles of the Technical Regulation of Radio Equipment***
27. Виробники повинні забезпечити супроводження кожної одиниці радіообладнання копією декларації про відповідність або спрощеної декларації про відповідність. Спрощена декларація про відповідність, форма якої наведена в додатку 6, повинна містити точну інтернет-адресу, за якою можна отримати повний текст декларації про відповідність.	***Article 10.9:*** *Manufacturers shall ensure that each item of radio equipment is accompanied by a copy of the EU declaration of conformity or by a simplified EU declaration of conformity.* *Where a simplified EU declaration of conformity is provided, it shall contain the exact internet address where the full text of the EU declaration of conformity can be obtained.*
28. У разі наявності вимог щодо отримання дозволу на експлуатацію радіообладнання виробник зобов'язаний надавати у товаросупровідній документації або на упаковці відповідну інформацію, визначену НКРЗІ, або шляхом надання такої інформації у декларації про відповідність. *НКРЗІ може визначити нормативно-правовими актами інший спосіб інформування про умови отримання дозволу на експлуатацію радіоелектронного засобу та інші параметри використання радіочастотного ресурсу України.*	***Article 10.10:*** *In cases of restrictions on putting into service or of requirements for authorization of use, information available on the packaging shall allow the identification of the Member States or the geographical area within a Member State where restrictions on putting into service or requirements for authorization of use exist. Such information shall be completed in the instructions accompanying the radio equipment.*
59. Ураховуючи конструкцію радіообладнання, висота знака відповідності технічним регламентам може бути менш як 5 міліметрів за умови, що він залишається видимий та розбірливий.	***Article 19.2:*** *On account of the nature of radio equipment, the height of the CE marking affixed to radio equipment may be lower than 5 mm, provided that it remains visible and legible.*
60. Знак відповідності технічним регламентам повинен наноситися на радіообладнання таким чином, щоб він був видимий, розбірливий і незмивний, або, якщо це не є можливим, на його інформаційну табличку з технічними даними. Знак відповідності технічним регламентам також наноситься на упаковку і повинен бути помітний та розбірливий.	***Article 20.1:*** *The CE marking shall be affixed visibly, legibly and indelibly to the radio equipment or to its data plate, unless that is not possible or not warranted on account of the nature of radio equipment. The CE marking shall also be affixed visibly and legibly to the packaging.*
Додаток 2 до Технічного регламенту, Модуль В (експертиза типу) 7. … Виробник повинен інформувати призначений орган, який зберігає технічну документацію, що пов'язана із сертифікатом експертизи типу, про всі модифікації затвердженого типу, що можуть вплинути на відповідність радіообладнання суттєвим вимогам Технічного регламенту або на умови чинності зазначеного сертифіката. Такі модифікації потребують додаткового дослідження типу радіообладнання та його затвердження у формі доповнення до первинного сертифіката експертизи типу.	***Annex III, Module B.7:*** *The manufacturer shall inform the notified body that holds the technical documentation relating to the EU-type examination certificate of all modifications to the approved type that may affect the conformity of the radio equipment with the essential requirements of this Directive or the conditions for validity of that certificate. Such modifications shall require additional approval in the form of an addition to the original EU-type examination certificate.*

Керівник органу з оцінки відповідності
Director of the conformity assessment body

А. М. Маєруд
(підпис, ініціали, прізвище) (signature, initials, family name)

М. П. / Stamp

Ф-03.05.04-1

ДЕКЛАРАЦІЯ ПРО ВІДПОВІДНІСТЬ № RTS.UKR.355-90/18

1. Радіообладнання (виріб, тип, номер партії чи серійний номер):
Радіопередавач торговельної марки **Continental** моделі **S180052024** системи контролю тиску в шині автомобіля.

2. Найменування та адреса виробника або його уповноваженого представника:
Уповноважений представник - ТОВ "Радіо Тест Стандарт", Україна, 03115, м.Київ, вул. Львівська, 22-а, к. 135, код ЄДРПОУ 39205151 (Довіреність "Контіненталь Аутомоутів ГмбХ" ("Continental Automotive GmbH"), Німеччина, від 18.09.2018).

3. Ця декларація відповідності видана під особисту відповідальність виробника:
"Контіненталь Аутомоутів ГмбХ", Зіменсштрассе 12, Д-93055 Регенсбург, Німеччина ("Continental Automotive GmbH", Siemensstrasse 12, D-93055 Regensburg, Germany).

4. Об'єкт декларації (ідентифікація радіообладнання, яка дає змогу забезпечити його простежуваність; може включати кольорове чітке зображення у разі потреби для ідентифікації зазначеного радіообладнання):
Радіопередавач торговельної марки Continental моделі S180052024 системи контролю тиску в шині автомобіля.

5. Об'єкт декларації відповідає вимогам таких технічних регламентів:
Технічного регламенту радіообладнання;

6. Посилання на відповідні стандарти з переліку національних стандартів, що були застосовані, або посилання на інші технічні специфікації, щодо яких декларується відповідність (із зазначенням ідентифікаційного номера, версії та дати видання):

Пункти "Технічного регламенту радіообладнання"	Стандарти	Номер протоколу випробувань	Випробувальна лабораторія (атестат акредитації)/ додаткова інформація
Застосовані стандарти, що включені до "Переліку національних стандартів, відповідність яким надає презумпцію відповідності радіообладнання суттєвим вимогам"			
п.7	-	-	-
Застосовані стандарти, що не включені до "Переліку національних стандартів, відповідність яким надає презумпцію відповідності радіообладнання суттєвим вимогам"			
п.6, абзац 1	ДСТУ EN 60950-1:2015 (тільки за пп. 1.2.3, 1.2.4, 1.7), ДСТУ EN 50385:2007	7005 від 08.02.2018	ВЦ РіТ УНДІРТ (2Н227)
п.6, абзац 2	ДСТУ EN 301 489-1:2014 (пп. 8.2, 9.2, 9.3) (з урахуванням ДСТУ ETSI EN 301 489-3:2009)	7005 від 08.02.2018	ВЦ РіТ УНДІРТ (2Н227)
п.7	ДСТУ ETSI EN 300 220-2:2012, ETSI EN 300 220-2 V2.3.1	7005 від 08.02.2018	ВЦ РіТ УНДІРТ (2Н227)

7. Призначений орган з оцінки відповідності ДЕРЖАВНОГО ПІДПРИЄМСТВА "УКРАЇНСЬКИЙ НАУКОВО-ДОСЛІДНИЙ ІНСТИТУТ РАДІО І ТЕЛЕБАЧЕННЯ". Реєстрацій номер: UA.TR.028
(найменування, ідентифікаційний номер згідно з реєстром призначених органів)

виконав **експертизу типу**
(опис виконаних ним дій)

та видав сертифікат експертизи типу **№ 889.14-СЕТ від 15.11.2018.**

Товариство з обмеженою відповідальністю «Радіо Тест Стандарт» Ідентифікаційний код 39205151 м. Київ

8. У відповідних випадках опис компонентів та аксесуарів, у тому числі програмного забезпечення, завдяки якому радіообладнання функціонує за призначенням і на яке поширюється дія декларації про відповідність:

Версія ПЗ (SW/FW version), яка впливає на дотримання суттєвих вимог:	V1;
Версія виконання виробу (HW version), яка впливає на дотримання суттєвих вимог:	V1;
Процесор(и), що виконує(ють) функції формування радіочастотних сигналів:	ZA729057M0B;

9. Додаткова інформація:

Підприємства-виробники:

- "Контіненталь Аутомоутів Франс С..А.С.", 1 Ав. Поль Орляк, 31036 Тулуза, Седекс 1, Франція
("Continental Automotive France S.A.S.", 1 Av. Paul Ourliac, 31036 Toulouse CEDEX 1, France, Франція);

Підписано від імені та за дорученням:

"Контіненталь Аутомоутів ГмбХ" ("Continental Automotive GmbH"), Німеччина, уповноваженим представником - ТОВ "Радіо Тест Стандарт", Україна.

м.Київ, "15" листопада 2018 р.

(місце та дата видачі)

Директор — Д. В. Шуман

(посада) *(підпис)* *(ініціали та прізвище)*

М.П.

ДЕКЛАРАЦІЯ ПРО ВІДПОВІДНІСТЬ

1. Радіообладнання: **Wheel Unit (TPMS) - 433 МГц (телеметрія та радіодистанційне керування).**

(виріб, тип, номер партії чи серійний номер)

2. **ТОВ «Нормакон-Україна»** (офіс 314, вул. Кірова 139, м. Мелітополь, Запорізька обл., 72319, Україна, код ЄДРПОУ 37463168).

(найменування та адреса виробника або його уповноваженого представника,

3. **Ця декларація відповідності видана під особисту відповідальність виробника**.

4. Об'єкт декларації:
Назва обладнання: **Модуль радіопередавача (Wheel Unit (TPMS));**
Модель: **TIS-15;**
Торговельна марка: **«Continental»;**
Виробник: **«Continental Automotive GmbH»** (Siemensstrasse 12, D-93055 Regensburg, Germany) / **«Контінентал Аутомотів ГмбХ»** (Сименсстрассе 12, Д-93055 Регенсбург, Німеччина);
Місце виробництва: **«Continental Automotive France S.A.S.»** (1 Avenue Paul Ourliac 31100 Toulouse, France) / **«Контінентал Аутомотів Франс САС»** (1 Авеню Паул Оурліак, 31100 Тулуз, Франція);
Номер партії або серійний номер: **продукція виготовляється серійно.**

(ідентифікація радіообладнання, яка дає змогу забезпечити його простежуваність; може включати кольорове чітке зображення у разі потреби для ідентифікації зазначеного радіообладнання)

5. Об'єкт декларації відповідає вимогам **«Технічного регламенту радіообладнання», затвердженого постановою Кабінета Міністрів України від 24.05.2017р. № 355**.

6. Стандарти з переліку національних стандартів, що були застосовані, та інші стандарти і технічні специфікації, щодо яких декларується відповідність:
з безпеки (пункт 6 технічного регламенту):
ДСТУ EN 60950-1:2015 (EN 60950-1:2006 A11:2009 A1:2010 A12:2011 AC:2011 A2:2013, IDT);
з електромагнітної сумісності (пункт 6 технічного регламенту):
ДСТУ EN 301 489-1:2014 (EN 301 489-1 V1.9.2, IDT);
ДСТУ ETSI EN 301 489-3:2009 (ETSI EN 301 489-3:2002, IDT);
ефективне використання радіочастотного ресурсу (пункт 7 технічного регламенту):
ДСТУ ETSI EN 300 220-2:2012 (ETSI EN 300 220-2:2007, IDT);
ETSI EN 300 220-1 V3.1.1 (2017-02);
ETSI EN 300 220-2 V3.1.1 (2017-02).

(із зазначенням ідентифікаційного номера, версії та дати видання)

7. Призначений орган з оцінки відповідності ***ООВ «Орган сертифікації «Центр сертифікації матеріалів та виробів» (№ UA.TR.032)***

(найменування, ідентифікаційний номер згідно з реєстром призначених органів)

Виконав роботи **з оцінки відповідності за процедурою експертизи типу (Модуль В)**

(опис виконаних ним дій)

та видав сертифікат експертизи типу **№ UA.032.CT.0275-18 від 17 грудня 2018 р.**

(у разі залучення призначеного органу з оцінки відповідності)

8. Додаткова інформація:
Програмна версія не визначена.

Підписано від імені та за договором дорученням № 20180503 від 03.05.2018 р. «Continental Automotive GmbH» (Siemensstrasse 12, D-93055 Regensburg, Germany) уповноваженим представником в Україні ТОВ «Нормакон-Україна».

м. **Мелітополь, Україна**	**17**	**грудня**	**2018 р.**
(місце та дата видачі)			

Директор
ТОВ «Нормакон-Україна» *(посада)* *(підпис)* **О. В. Шелегін** *(ініціали та прізвище)*

М.П.

ДЛЯ ДЕКЛАРАЦІЙ ТОВ «НОРМАКОН-УКРАЇНА» Код 37463168 72319, УКРАЇНА, ЗАПОРІЗЬКА ОБЛ., м.МЕЛІТОПОЛЬ

Взята на облік
у ООВ ТОВ «ОС «ЦСМВ»»
UA.032.D. 00423-18
дата 21.12.2018

1O175
ДСТУ EN ISO/IEC 17065

ЦСМВ
CCM&G

СЕРТИФІКАТ ЕКСПЕРТИЗИ ТИПУ

TYPE EXAMINATION CERTIFICATE

№ у реєстрі № in the register	Кількість додатків number of applications	Термін дії Term of validity is from	
UA.032.CT.0275-18	1	від 17 грудня 2018 р.	

Сертифікат видано
Certificate is issued to

ТОВ «Нормакон-Україна» (офіс 314, вул. Кірова 139, м. Мелітополь, Запорізька обл., 72319, Україна, код ЄДРПОУ 37463168) за договором дорученням № 20180503 від 03.05.2018р. «Continental Automotive GmbH» (Siemensstrasse 12, D-93055 Regensburg, Germany/Німеччина)

(назва та адреса виробника або уповноваженої особи)

Продукція
Production

Модуль радіопередавача (Wheel Unit (TPMS)) торговельної марки «Continental» моделі TIS-15 — **8526**

(повна назва, тип, вид, марка, торгова марка) / (complete product name, type, kind, model, merchandise mark (trademark)) — (код (я) УКТЗЕД/ (UKTZED code (s))

Відповідає вимогам
Comply with the requirements

Технічного регламенту радіообладнання затвердженого постановою Кабінету міністрів України від 24 травня 2017 р. № 355, п.6 – безпека, електромагнітна сумісність, п. 7 – ефективне використання радіочастотного ресурсу

Виробник
Producer

«Continental Automotive GmbH» (Siemensstrasse 12, D-93055 Regensburg, Germany) / **«Контінентал Аутомотів ГмбХ»** (Сименсстрассе 12, Д-93055 Регенсбург, Німеччина)

Місце виробництва
Place of production

«Continental Automotive France S.A.S.» (1 Avenue Paul Ourliac 31100 Toulouse, France) / **«Контінентал Аутомотів Франс САС»** (1 Авеню Паул Оурліак, 31100 Тулуз, Франція)

Сертифікат видано органом з оцінки відповідності
Certificate is issued by the conformity assessment body

ООВ «Орган сертифікації «Центр сертифікації матеріалів та виробів», № UA.TR.032
Атестат про акредитацію НААУ № 1О175
(юридична адреса: 03164, м. Київ, вул. Малинська, 20-А;
пошт. адреса: 03680, м. Київ, вул. Виборзька, 103,
тел. (044) 221-94-10; 457-69-23; тел./факс 404-88-03)

Додаткова інформація
Additional information

Технічні характеристики та умови застосування наведені в Додатку

На підставі
On the grounds of

Рішення за результатами звіту про оцінювання № TR0369-18 від 17.12.2018 р.

Керівник органу з оцінки відповідності
Director of the conformity assessment body

М.П. Stamp

О. С. Іщенко
(підпис, ініціали, прізвище)
(signature, initials, family name)

Чинність сертифіката відповідності можна перевірити в базі даних органу сертифікації за тел. 044 221-94-10 Действие сертификата соответствия можно проверить в базе данных органа сертификации по тел. 044 221-94-10 Validity of the certificate of conformity can be checked on the base of data of the certification body tel. 044 221-94-10

ЦСМВ
CCM&G

1O175
ДСТУ EN ISO/IEC 17065

ДОДАТОК

до сертифіката експертизи типу

ANNEX TO TYPE EXAMINATION CERTIFICATE

№ UA.032.CT.0275-18 від 17 грудня 2018 р.

1. Обґрунтування відповідності пристрою вимогам Технічного регламенту радіообладнання, протоколи, нормативні документи

Суттєві вимоги ТР	Вимоги, що перевірялися	Протоколи	Дата	Стандарти, що застосовувалися
п. 6 абз. 1	Безпека	160917-AU01+S01	04.09.2017 р.	**ДСТУ EN 60950-1:2015** (EN 60950-1:2006 A11:2009 A1:2010 A12:2011 AC:2011 A2:2013, IDT)
п. 6 абз. 2	ЕМС	160917-AU01+E01_R1	07.09.2017 р.	**ДСТУ EN 301 489-1:2014** (EN 301 489-1 V1.9.2, IDT); **ДСТУ ETSI EN 301 489-3:2009** (ETSI EN 301 489-3:2002, IDT)
п. 7	Радіо	160917-AU01+W01_R1	07.09.2017 р.	**ДСТУ ETSI EN 300 220-2:2012** (ETSI EN 300 220-2:2007, IDT); **ETSI EN 300 220-1 V3.1.1** (2017-02); **ETSI EN 300 220-2 V3.1.1** (2017-02)

2. Технічні характеристики радіообладнання:

2.1. Wheel Unit (TPMS) - 433 МГц:
2.1.1 Радіотехнологія: телеметрія та радіодистанційне керування;
2.1.2 Діапазон частот, МГц: 433,05 - 434,79;
2.1.3 Номінальна робоча частота, МГц: 433,92;
2.1.4 Ефективна випромінювана потужність: (мінус) 21,76 дБм;
2.1.5 Тип модуляції: FSK;
2.1.6 Тип антени: інтегрована.

3. Програмна версія не визначена.

4. Перелік документації на продукцію, що розглядалася:

- Специфікація;
- Інструкція;
- Маркування;
- Схеми;
- Оцінка ризиків;
- Зображення внутрішньої та зовнішньої компоновки (фото);
- Декларація EU;
- Сертифікат EU.

5. Умови застосування:

Продукція зазначена в сертифікаті відповідає узагальненим умовам: PI 42-2, які схвалені Рішенням НКРЗІ від 12.01.2012 №18 станом на 06.03.2018 р., додаток 19.
Експлуатація зазначеного в цьому сертифікаті радіообладнання у зазначеному складі та технічними характеристиками здійснюється на бездозвільній основі (Рішення НКРЗІ №844 від 23.12.2014 р. зареєстровано у Міністерстві юстиції України 19.02.2015 р. за № 201/26646), з урахуванням змін до положення про порядок і форму ведення реєстру радіоелектронних засобів та випромінювальних пристроїв, що можуть застосовуватися на території України в смугах радіочастот загального користування, затвердженого рішенням НКРЗІ 03.04.2018 р. за № 188, зареєстрованого Міністерстві Юстиції України 07.06.2018 р. за № 688/32140.

Керівник органу з оцінки відповідності
Director of the conformity assessment body

«ОРГАН СЕРТИФІКАЦІЇ «ЦЕНТР СЕРТИФІКАЦІЇ МАТЕРІАЛІВ ТА ВИРОБІВ» Ідентифікаційний код 36038552 м. Київ Україна Товариство з обмеженою відповідальністю

О. С. Іщенко
(підпис, ініціали, прізвище)
(signature, initials, family name)

Чинність сертифіката відповідності можна перевірити в базі даних органу сертифікації за тел. 044 221-94-10 Действие сертификата соответствия можно проверить в базе данных органа сертификации по тел. 044 221-94-10 Validity of the Certificate of conformity can be checked on the base of data of the certification body tel. 044 221-94-10

028

ДЕКЛАРАЦІЯ ПРО ВІДПОВІДНІСТЬ

1. Радіообладнання: **Модуль радіоприймача (Receiver Module) торговельної марки «Continental» моделей 5WK50250, 5WK50252, 5WK50257, 5WK50254, 40398036, 40406557, 40398279**

(виріб, тип, номер партії чи серійний номер)

2. **ТОВ «Нормакон-Україна»** (офіс 314, вул. Кірова 139, м. Мелітополь, Запорізька обл., 72319, Україна, код ЄДРПОУ 37463168)

(найменування та адреса виробника або його уповноваженого представника,

3. **Ця декларація відповідності видана під особисту відповідальність виробника**.

4. Об'єкт декларації:
Назва обладнання: **Модуль радіоприймача (Receiver Module);**
Моделі: **5WK50250, 5WK50252, 5WK50257, 5WK50254, 40398036, 40406557, 40398279;**
Радіообладнання: **радіоприймач 433 МГц;**
Торговельна марка: **«Continental»;**
Виробник: **«Контінентал Аутомотів ГмбХ»** (Сименсстрасе 12, Д-93055 Ренсборг, Німеччина) / **«Continental Automotive GmbH»** (Siemensstrasse 12, D-93055 Regensburg, Germany) на підприємстві: **«Контінентал Аутомотів Сістемс Чех Репаблік с.р.о.»** (744 01 Френстат под Радхостем, Копанска 1713, Чеська Республіка) / **«Continental Automotive Systems Czech Republic s.r.o.»** (744 01 Frenstat pod Radhostem, Kopanska 1713, Czech Republic);
Номер партії або серійний номер: **продукція виготовляється серійно.**

(ідентифікація радіообладнання, яка дає змогу забезпечити його простежуваність; може включати кольорове чітке зображення у разі потреби для ідентифікації зазначеного радіообладнання)

5. Об'єкт декларації відповідає вимогам **«Технічного регламенту радіообладнання», затвердженого постановою Кабінета Міністрів України від 24.05.2017р. № 355**.

6. Стандарти з переліку національних стандартів, що були застосовані, та інші стандарти і технічні специфікації, щодо яких декларується відповідність:
з безпеки (пункт 6 технічного регламенту):
ДСТУ EN 60950-1:2015 (EN 60950-1:2006 A11:2009 A1:2010 A12:2011 AC:2011 A2:2013, IDT);
з електромагнітної сумісності (пункт 6 технічного регламенту):
ДСТУ EN 301 489-1:2014 (EN 301 489-1 V1.9.2, IDT);
ДСТУ ETSI EN 301 489-3:2009 (ETSI EN 301 489-3:2002, IDT)
ефективне використання радіочастотного ресурсу (пункт 7 технічного регламенту):
ETSI EN 300 220-2 V2.4.1 (2012 05)

(із зазначенням ідентифікаційного номера, версії та дати видання)

7. Призначений орган з оцінки відповідності ***ООВ «Орган сертифікації «Центр сертифікації матеріалів та виробів» (№ UA.TR.032)***

(найменування, ідентифікаційний номер згідно з реєстром призначених органів)

Виконав роботи **з оцінки відповідності за процедурою експертизи типу (Модуль В)**

(опис виконаних ним дій)

та видав сертифікат експертизи типу **№ UA.032.CT.0030-18 від 11 травня 2018р.**

(у разі залучення призначеного органу з оцінки відповідності)

8. Додаткова інформація:
Програмне забезпечення не впливає на технічні характеристики радіообладнання і не може бути змінене користувачем.

Підписано від імені та за договором дорученням № 20180503 **«Контінентал Аутомотів ГмбХ»** (Сименсстрасе 12, Д-93055 Ренсборг, Німеччина) / **«Continental Automotive GmbH»** (Siemensstrasse 12, D-93055 Regensburg, Germany) уповноваженим представником в Україні ТОВ «Нормакон-Україна».

м. Мелітополь, Україна **11** **травня** **2018 р.**
(місце та дата видачі)

Директор
ТОВ «Нормакон-Україна» *(підпис)* **О. В. Шелегін**
(посада) *(ініціали та прізвище)*

М.П.

ДЛЯ ДЕКЛАРАЦІЙ ТОВ «НОРМАКОН-УКРАЇНА» Код 37463168 УКРАЇНА, ЗАПОРІЗЬКА ОБЛ., м.МЕЛІТОПОЛЬ

Взята на облік
у ООВ ТОВ «ОС «ЦСМВ»»
UA.032.D. 090327-18
дата 15.05.2018

1O175
ДСТУ EN ISO/IEC 17065

ЦСМВ
CCM&G

СЕРТИФІКАТ ЕКСПЕРТИЗИ ТИПУ

TYPE EXAMINATION CERTIFICATE

№ у реєстрі № in the register	Кількість додатків number of applications	Чинний від Valid from
UA.032.CT.0102-23	**1**	**від 17 березня 2023 р.**

Сертифікат видано
Certificate is issued to

Товариству з обмеженою відповідальністю «ЛЕПТА УКРАЇНА», Україна, 04050, м. Київ, Шевченківський район, вул. Юрія Іллєнка, будинок 12, код ЄДРПОУ 36351469
(за Довіреністю № 20230224-04 від 24.02.2023 р. «Continental Automotive Technologies GmbH», Німеччина).

Продукція
Production

модуль приймача TPMS ECU (Receiver) торговельної марки «Continental» моделі TIS-i400.
(повна назва, тип, вид, марка, торгова марка) / (complete product name, type, kind, model, merchandise mark (trademark))

Відповідає вимогам
Comply with the requirements

Технічного регламенту радіообладнання, затвердженого постановою Кабінету міністрів України від 24 травня 2017 р. № 355, п.6 – безпека, електромагнітна сумісність, п.7 - ефективне використання радіочастотного ресурсу.

Виробник
Producer

«Continental Automotive Technologies GmbH» (Siemensstrasse 12, 93055 Regensburg, Germany) / **«Контінентал Аутомотів Технолоджіз ГмбХ»** (Сименсстрассе 12, 93055 Регенсбург, Німеччина).

Місце виробництва
Place of production

«Continental Automotive France SAS» (1 Avenue Paul Ourliac, 31100 Toulouse 1, France) / **«Контінентал Аутомотів Франс САС»** (1 Авеню Паул Оурліак, 31100 Тулуз 1, Франція).

Сертифікат видано органом з оцінки відповідності
Certificate is issued by the conformity assessment body

ООВ «Орган сертифікації «Центр сертифікації матеріалів та виробів», № UA.TR.032
Атестат про акредитацію НААУ № 1О175
(юридична адреса: 03142, м. Київ, вул. Малинська, 20-А;
пошт. адреса: 03067, м. Київ, вул. Олекси Тихого, 103,
тел. (044) 457-69-23; e-mail: csmv@conformity.kiev.ua

Додаткова інформація
Additional information

Номінальна напруга живлення: 12 В.

Технічні характеристики та умови використання наведені в Додатку.

На підставі
On the grounds of

Рішення за результатами звіту про оцінювання № TR0101-23 від 17.03.2023 р.

Примітка: **Дія цього сертифіката припиняється у разі: зміни виробником технічних характеристик обладнання, яке зазначене в ньому, змін технічних характеристик у нормативних документах, що зазначені у Додатку до сертифіката, зміні суттєвих вимог (п.п 6, 7, 8) Технічного регламенту.**

Україна * Товариство з обмеженою відповідальністю * м.Київ
«ОРГАН СЕРТИФІКАЦІЇ «ЦЕНТР СЕРТИФІКАЦІЇ МАТЕРІАЛІВ ТА ВИРОБІВ»
Ідентифікаційний код 36030552

Керівник органу з оцінки відповідності
Director of the conformity assessment body

О.С. Іщенко
(підпис, ініціали, прізвище)
(signature, initials, family name)

М.П./Stamp

Чинність сертифіката відповідності можна перевірити в базі даних органу сертифікації за тел. 044 457-69-23 Действие сертификата соответствия можно проверить в базе данных органа сертификации по тел. 044 457-69-23 Validity of the Certificate of conformity can be checked on the base of data of the certification body tel. 044 457-69-23

1O175
ДСТУ EN ISO/IEC 17065

ЦСМВ
CCM&G

ДОДАТОК

до сертифіката експертизи типу
ANNEX TO TYPE EXAMINATION CERTIFICATE

№ UA.032.CT.0102-23 від 17 березня 2023 р.

1. Протоколи та нормативні документи з переліку національних стандартів, що були застосовані, та інші стандарти і технічні специфікації, щодо яких проводилося оцінювання

Суттєві вимоги ТР	Вимоги, що перевірялися	Протоколи	Дата	Стандарти, що застосовувалися
п. 6 абз. 1	Безпека	TSSN2212000390L0	18.01.2023 р.	**ДСТУ EN 62368-1:2017** (EN 62368-1:2014; AC:2015-05; AC:2015-02; AC:2015-11; AC:2017; A11:2017; IDT; IEC 62368-1:2014, MOD; Cor 1:2014; Cor 2:2015, IDT)
п. 6 абз. 2	ЕМС	TMWK2211004953KE	04.02.2023 р.	**ETSI EN 301 489-1 V2.2.3; ДСТУ ETSI EN 301 489-3:2009** (ETSI EN 301 489-3:2002, IDT); **ДСТУ EN 55032:2017** (EN 55032:2015, IDT)
п. 7	Радіопристрій короткого радіусу дії (SRD 433 МГц, приймач)	TMWK2211004952KR	15.02.2023 р.	**ДСТУ ETSI EN 300 220-1:2018** (ETSI EN 300 220-1:2017, IDT); **ДСТУ ETSI EN 300 220-2:2017** (ETSI EN 300 220-2:2017, IDT)
п. 8	Радіообладнання, стосовно якого здійснюється експертиза, на час складання цього сертифікату, у нормативно-правових актах ЦОВЗ не визначено як таке, до якого стосуються вимоги підпунктів 1-9 пункту 8 ТР РО.			

2. Технічні характеристики радіообладнання.

2.1 Пристрій короткого радіусу дії (SRD 433 МГц, приймач):

2.1.1 Радіотехнологія: телеметрія та радіодистанційне керування.
2.1.2 Діапазон частот, МГц: 433,05 - 434,79.
2.1.3 Робоча частота прийому, МГц: 433,92.
2.1.5 Тип модуляції: FSK.
2.1.6 Тип антени / інтегрована / коефіцієнт підсилення, не більше, дБі: (мінус) 0,06.

3. Програмна версія / апаратна версія: 02.00 /41853583_AC.

4. Перелік документації на продукцію, що розглядалася: технічна специфікація, посібник користувача, фотографії (зовнішній вигляд та внутрішнє компонування), **маркування, блок-діаграми, технологічні креслення та схеми, оцінка ризиків** (Risk Assessment according 2014/53(RED)) від **14.02.2023 р.**, **Декларація «Continental Automotive Technologies GmbH»** (EU Declaration of Conformity in accordance with Directive 2014/53/EU 02.02.2023 No TIS-i400).

5. Умови застосування

Продукція зазначена в сертифікаті відповідає узагальненим умовам: РІ 42-2, які схвалені Рішенням НКРЗІ від 12.01.2012 № 18.

Експлуатація зазначеного в цьому сертифікаті радіообладнання у зазначеному складі та технічними характеристиками здійснюється на бездозвільній основі (Рішення НКРЗІ № 844 від 23.12.2014 р. зареєстровано у Міністерстві юстиції України 19.02.2015 р. за № 201/26646) з урахуванням Положення про реєстр радіообладнання та випромінювальних пристроїв затверджених постановою Національної комісії, що здійснює державне регулювання у сферах електронних комунікацій, радіочастотного спектра та надання послуг поштового зв'язку від 29 червня 2022 року № 87, зареєстроване в Міністерстві юстиції України 15 липня 2022 року за № 7883812.

Керівник органу з оцінки відповідності
Director of the conformity assessment body

О.С. Іщенко
(підпис, ініціали, прізвище)
(signature, initials, family name)

МП/Stamp

Чинність сертифіката відповідності можна перевірити в базі даних органу сертифікації за тел. 044 457-69-23 Действие сертификата соответствия можно проверить в базе данных органа сертификации по тел. 044 457-69-23 Validity of the Certificate of conformity can be checked on the base of data of the certification body tel. 044 457-69-23

ДЕКЛАРАЦІЯ ПРО ВІДПОВІДНІСТЬ

1. **Модуль приймача з радіообладнанням: радіопристрій короткого радіусу дії (SRD 433 МГц, приймач).**

(виріб, тип, номер партії чи серійний номер)

2. **ТОВ «ЛЕПТА УКРАЇНА» (Україна, 04050, м. Київ, Шевченківський район, вул. Юрія Іллєнка, будинок 12, код ЄДРПОУ 36351469).**

(найменування та адреса виробника або його уповноваженого представника)

3. **Ця декларація відповідності видана під особисту відповідальність виробника.**

4. Об'єкт декларації:
Назва обладнання: **модуль приймача TPMS ECU (Receiver).**
Торговельна марка: **«Continental».**
Модель: **TIS-i400.**
Номінальна напруга живлення: **12,0 В.**
Виробник: **«Continental Automotive Technologies GmbH»** (Siemensstrasse 12, 93055 Regensburg, Germany) / **«Контінентал Аутомотів Технолоджіз ГмбХ»** (Сименсстрассе 12, 93055 Регенсбург, Німеччина).
Місце виробництва: **«Continental Automotive France SAS»** (1 Avenue Paul Ourliac, 31100 Toulouse 1, France) / **«Контінентал Аутомотів Франс САС»** (1 Авеню Паул Оурліак, 31100 Тулуз 1, Франція).
Номер партії або серійний номер: **продукція виготовляється серійно**.

(ідентифікація радіообладнання, яка дає змогу забезпечити його простежуваність; може включати кольорове чітке зображення у разі потреби для ідентифікації зазначеного радіообладнання)

5. Об'єкт декларації відповідає вимогам **«Технічного регламенту радіообладнання», затвердженого постановою Кабінета Міністрів України від 24.05.2017 р. № 355.**

6. Стандарти з переліку національних стандартів, що були застосовані, та інші стандарти і технічні специфікації, щодо яких декларується відповідність:

з безпеки (пункт 6 технічного регламенту):
ДСТУ EN 62368-1:2017 (EN 62368-1:2014; AC:2015-05; AC:2015-02; AC:2015-11; AC:2017; A11:2017; IDT; IEC 62368-1:2014, MOD; Cor 1:2014; Cor 2:2015, IDT),
з електромагнітної сумісності (пункт 6 технічного регламенту):
ETSI EN 301 489-1 V2.2.3 (2019-11);
ДСТУ ETSI EN 301 489-3:2009 (ETSI EN 301 489-3:2002, IDT);
ДСТУ EN 55032:2017 (EN 55032:2015, IDT),
ефективне використання радіочастотного ресурсу (пункт 7 технічного регламенту):
ДСТУ ETSI EN 300 220-1:2018 (ETSI EN 300 220-1:2017, IDT);
ДСТУ ETSI EN 300 220-2:2017 (ETSI EN 300 220-2:2017, IDT).

(із зазначенням ідентифікаційного номера, версії та дати видання)

7. Призначений орган з оцінки відповідності ***ООВ «Орган сертифікації «Центр сертифікації матеріалів та виробів» (№ UA.TR.032)***

(найменування, ідентифікаційний номер згідно з реєстром призначених органів)

Виконав роботи ***з оцінки відповідності за процедурою експертизи типу (Модуль В)***

(опис виконаних ним дій)

та видав сертифікат експертизи типу **№ UA.032.CT.0102-23 від 17 березня 2023 р.**

(у разі залучення призначеного органу з оцінки відповідності)

8. Додаткова інформація:

Підписано від імені та за **Довіреністю № 20230224-04 від 24.02.2023 р. «Continental Automotive Technologies GmbH» (Німеччина),** уповноваженим представником в Україні - **ТОВ «ЛЕПТА УКРАЇНА» (Україна).**

м. Київ, Україна **17** **березня** **2023 р.**

(місце та дата видачі)

Директор ТОВ «ЛЕПТА УКРАЇНА» **Кротюк Євген Євгенович**

(посада) *(підпис)* *(прізвище, ім'я та по батькові)*

М.П.

Україна * Товариство з обмеженою відповідальністю * "ЛЕПТА УКРАЇНА" Ідентифікаційний код 36351469

Взята на облік
ТОВ «ОС «ЦСМВ»
UA.032.D. 00118-23
дата 21.03.2023

ДЕКЛАРАЦІЯ ПРО ВІДПОВІДНІСТЬ

1. Модель виробу/виріб (номер виробу, тип або номер партії чи серійний номер**):

Модуль приймача TPMS ECU (Receiver) торговельної марки «Continental» моделі TIS-i400.

2. Найменування та місцезнаходження виробника або його уповноваженого представника:
- «Continental Automotive Technologies GmbH» (Siemensstrasse 12, 93055 Regensburg, Germany) / «Контінентал Аутомотів Технолоджіз ГмбХ» (Сименсстрассе 12, 93055 Регенсбург, Німеччина).

3. Ця декларація про відповідність видана під виключну відповідальність виробника (монтажника).

4. Об'єкт декларації (ідентифікація електричного та електронного обладнання, яка дає змогу забезпечити його простежуваність; у разі потреби може включати фотографію):

Назва обладнання: **модуль приймача TPMS ECU (Receiver);**

Модель: **TIS-i400;**

5. Об'єкт декларації, описаний вище, відповідає вимогам таких технічних регламентів:
Технічний регламент обмеження використання деяких небезпечних речовин в електричному та електронному обладнанні, затверджений Постановою Кабінету Міністрів України від 10 березня 2017 р. N 139;

6. Посилання на відповідні стандарти з переліку національних стандартів, що були застосовані, або посилання на інші технічні специфікації, стосовно яких декларується відповідність: **ДСТУ EN 50581:2014 Технічна документація для оцінювання електричних та електронних виробів стосовно обмеження застосування небезпечних речовин.**

7. Додаткова інформація: продукція виготовляється серійно на підприємстві:
«Continental Automotive France SAS» (1 Avenue Paul Ourliac, 31100 Toulouse, France) / «Контінентал Аутомотів Франс САС» (1 Авеню Паул Оурліак, 31100 Тулуз, Франція).

Підписано від імені та за дорученням: **«Continental Automotive Technologies GmbH» / «Контінентал Аутомотів Технолоджіз ГмбХ».**

Regensburg, Germany /
Регенсбург, Німеччина 20 березня 2023р.
(місце та дата видачі)

_____ _____
(прізвище, ім'я та по батькові, посада) (підпис)

* Присвоєння виробником номера декларації про відповідність є необов'язковим.
** Номер виробу, тип або номер партії чи серійний номер можуть зазначатися з використанням літерно-цифрових позначень.

Модель №.: TS008 / T61M0 / S57L0 / R57L1 / K63T0 / I68P0 / K68P2/ K81RA / K67T0 / P55T0 / R55T0

Назва виробника / зареєстрований товарний знак : Marelli Corp.
Адреса виробника : 2-19-4 Miyahara-cho, Kita-ku, Saitama-city, Saitama 331-0812,Japan
Ім'я імпортера / адреса : Auto International
22-A Stepana Bandery Avenue, 04073 Kiev, Ukraine

Діапазон радіочастот, в якому працює устаткування

TS008 модель : 433,92 МГц, T61M0 модель : 433,92 МГц, S57L0 модель : 125 кГц, R57L1 модель : 433,92 МГц,
K63T0 модель : 125 кГц, I68P0 модель : 125 кГц, K68P2 модель : 433,92 МГц, K81RA модель : 433,92 МГц
K67T0 модель : 125 кГц, P55T0 модель : 125 кГц, R55T0 модель : 433,92 МГц,

Максимальна потужність сигналу, що передається у діапазоні радіочастот, в якому працює устаткування

TS008 модель	: 80.0дБмкВ/м на відстані 3м.	T61M0 модель	: 90.0дБмкВ/м на відстані 3м.
S57L0 модель	: 55.3дБмкВ/м на відстані 10м.	K63T0 модель	: 42.9дБмкВ/м на відстані 10м.
I68P0 модель	: 44.1дБмкВ/м на відстані 10м.	K67T0модель	: 63.5дБмкВ/м на відстані 10м.
P55T0модель	: 66.0дБмкВ/м на відстані 10м.	R55T0 модель	: 83.0дБмкВ/м на відстані 3м.

Проста декларація про відповідність

Цією декларацією Marelli Corp.. заявляє, що тип радіообладнання TS008,T61M0,S57L0,R57L1,K63T0,I68P0,K68P2,K68P4, K81R,K67T0,P55T0,R55T0 відповідає Технічномурегламенту радіообладнання;
повний текст декларації про відповідність доступний на веб-сайті за такою адресою:

https://www.marelli-corporation.com/en/assets/pdf/products/red-doc/remocon-assy-keyless/ukraine_doc_ts008.pdf
https://www.marelli-corporation.com/en/assets/pdf/products/red-doc/switch-assy-transmitter/ukraine_doc_t61m0.pdf
https://www.marelli-corporation.com/en/assets/pdf/products/red-doc/bcm/ukraine_doc_s57l0.pdf
https://www.marelli-corporation.com/en/assets/pdf/products/red-doc/receiver-assy-keyless/ukraine_doc_r57l1.pdf
https://www.marelli-corporation.com/en/assets/pdf/products/red-doc/bcm/ukca_doc_k63t0.pdf
https://www.marelli-corporation.com/en/assets/pdf/products/red-doc/immobilizer/ukraine_doc_i68p0.pdf
https://www.marelli-corporation.com/en/assets/pdf/products/red-doc/bcm/ukraine_doc_k68p2.pdf
https://www.marelli-corporation.com/en/assets/pdf/products/red-doc/bcm/ukraine_doc_k81ra.pdf
https://www.marelli-corporation.com/en/assets/pdf/products/red-doc/bcm/ukraine_doc_k67t0.pdf
https://www.marelli-corporation.com/en/assets/pdf/products/red-doc/immobilizer/ukraine_doc_p55t0.pdf
https://www.marelli-corporation.com/en/assets/pdf/products/red-doc/remocon-assy-keyless/ukraine_doc_r55t0.pdf

S180052024

И005 18

Continental TIS-i400 Serbia RATEL Approval

TIS-15

И005 18

40398036

И005 11

И 005 23

MODEL No. :
S57L0 / TS008 / R57L1 / TWK1A001 / T61M0 / I61M0 / B76MC / I76M0 / K68P2 / K68P4 / I68P0 / K81RA / P55T0 / R55T0 / K67T0

מספר אישור התאמה מטעם משרד התקשורת: 513619601

"חל איסור לבצע פעולות במכשיר שיש בהן כדי לשנות את תכונותיו האלחוטיות של המכשיר, ובכלל זה שינויי תוכנה, החלפת אנטנה מקורית או הוספת אפשרות לחיבור לאנטנה חיצונית, בלא קבלת אישור משרד התקשורת, בשל החשש להפרעות אלחוטיות."

מספר זיהוי היבואן: 513619601

חל איסור לבצע פעולות במכשיר שיש בהן כדי לשנות את תכונותיו האלחוטיות של המכשיר, ובכלל זה שינויי תוכנה, החלפת אנטנה מקורית או הוספת אפשרות לחיבור לאנטנה חיצונית, בלא קבלת אישור משרד התקשורת, בשל החשש להפרעות אלחוטיות.

Model ID : I61M0 / I76M0 / S57L0 / T61M0 / TS008 / TS011 / TWK1A001 / K63T0 / K67T0 / P55T0 / R55T0

Complies with IMDA Standards DA107093

Model No. S57L0

CCAB09LP1750T0

Model No. TS012 / R57L2

CCAB09LP1660T9

Model No. TWK1A001

CCAB08LP4540T6

Model No. I61M0

CCAK13LP0270T3

Model No. K63T0

CCAQ21LP0180T3

Model No. K67T0

CCAB23LP0290T6

Model No. P55T0

CCAB23LP0270T0

Model No. R55T0

CCAB23LP0280T3

取得審驗證明之低功率射頻器材，非經核准，公司、商號或使用者均不得擅自變更頻率、加大功率或變更原設計之特性及功能。

低功率射頻器材之使用不得影響飛航安全及干擾合法通信;經發現有干擾現象時，應立即停用，並改善至無干擾時方得繼續使用。

前述合法通信，指依電信管理法規定作業之無線電通信。

低功率射頻器材須忍受合法通信或工業、科學及醫療用電波輻射性電機設備之干擾。

TS008-2 switch

AGRÉÉ PAR L'ANRT MAROC
Numéro d'agrément MR 5189 ANRT 2009
Date d'agrément :21 NOV. 2019

TS008-3 switch

AGRÉÉ PAR L'ANRT MAROC
Numéro d'agrément MR 5190 ANRT 2009
Date d'agrément :21 NOV. 2019

S57L0

AGRÉÉ PAR L'ANRT MAROC
Numéro d'agrément MR 5188 ANRT 2009
Date d'agrément :08 NOV. 2019

R57L1

AGRÉÉ PAR L'ANRT MAROC
Numéro d'agrément MR 5191 ANRT 2009
Date d'agrément :08 NOV. 2019

TWK1A001

AGRÉÉ PAR L'ANRT MAROC
Numéro d'agrément MR 5169 ANRT 2009
Date d'agrément :05 NOV. 2019

I61M0

AGRÉÉ PAR L'ANRT MAROC
Numéro d'agrément MR 7831 ANRT 2013
Date d'agrément :05 FEV. 2003

T61M0

AGRÉÉ PAR L'ANRT MAROC
Numéro d'agrément MR 7816 ANRT2013
Date d'agrément :31 JAN. 2013

I68P0

AGRÉÉ PAR L'ANRT MAROC
Numéro d'agrément MR 9603 ANRT 2014
Date d'agrément :12 SEPT. 2014

K68P2

AGRÉÉ PAR L'ANRT MAROC
Numéro d'agrément MR 10015 ANRT 2015
Date d'agrément :29 JAN. 2015

K68P4

AGRÉÉ PAR L'ANRT MAROC
Numéro d'agrément MR 10014 ANRT 2015
Date d'agrément :29 JAN. 2015

K81RA

AGRÉÉ PAR L'ANRT MAROC
Numéro d'agrément MR 20037 ANRT 2019
Date d'agrément :11 JUIN. 2019

I76M0

AGRÉÉ PAR L'ANRT MAROC
Numéro d'agrément MR 8784 ANRT 2013
Date d'agrément :26 DEC. 2013

B76MC

AGRÉÉ PAR L'ANRT MAROC
Numéro d'agrément MR 8783 ANRT 2013
Date d'agrément :27 DEC. 2013

K67T0

AGRÉÉ PAR L'ANRT MAROC
Numéro d'agrément MR00037706ANRT2023
Date d'agrément :27 DEC. 2013

P55T0

AGRÉÉ PAR L'ANRT MAROC
Numéro d'agrément MR00037709ANRT2023
Date d'agrément :27 DEC. 2013

R55T0

AGRÉÉ PAR L'ANRT MAROC
Numéro d'agrément MR00037711ANR 2023
Date d'agrément :27 DEC. 2013

K67TA

AGRÉÉ PAR L'ANRT MAROC
Numéro d'agrément MR00037708ANRT2023
Date d'agrément :27 DEC. 2013

Information of the radio device: Type TN0027A

1. Name and postal address of the manufacturer

   Name: DENSO TEN Limited
   Address: 2-28, Gosho-dori 1-chome, Hyogo-ku, Kobe, 652-8510 Japan

2. Simplified EU declaration of conformity

С настоящото DENSO TEN Limited декларира, че този тип радиосъоръжение TN0027A е в съответствие с Директива 2014/53/ЕС.
Цялостният текст на ЕС декларацията за съответствие може да се намери на следния интернет адрес:
https://www.denso-ten.com/support/regulation/eu_doc/

Функция	Работна честотна лента	Максимална радиочестотна мощност
GSM	880~915 MHz 1710~1785 MHz	35dBm e.i.r.p. 32dBm e.i.r.p.
UMTS	880~915 MHz 1920~1980 MHz	25dBm e.i.r.p. 25dBm e.i.r.p.
LTE	832~862 MHz 880~915 MHz 1710~1785 MHz 1920~1980 MHz 2500~2570 MHz	24dBm e.i.r.p. 24dBm e.i.r.p. 24dBm e.i.r.p. 24dBm e.i.r.p. 24dBm e.i.r.p

Ovim putem, DENSO TEN Limited izjavljuje da je vrsta radio opreme TN0027A u saglasnosti s Direktivom 2014/53/EU.
Cijeli tekst EC deklaracije o usaglašenosti je dostupan na sljedećoj internetskoj adresi:
https://www.denso-ten.com/support/regulation/eu_doc/

Funkcija	Radni frekvencijski pojas	Maksimalna rediofrekvencijska snaga
GSM	880~915 MHz 1710~1785 MHz	35dBm e.i.r.p. 32dBm e.i.r.p.
UMTS	880~915 MHz 1920~1980 MHz	25dBm e.i.r.p. 25dBm e.i.r.p.
LTE	832~862 MHz 880~915 MHz 1710~1785 MHz 1920~1980 MHz 2500~2570 MHz	24dBm e.i.r.p. 24dBm e.i.r.p. 24dBm e.i.r.p. 24dBm e.i.r.p. 24dBm e.i.r.p

Tímto DENSO TEN Limited prohlašuje, že typ rádiového zařízení TN0027A je v souladu se směrnicí 2014/53/EU.
Úplné znění EU prohlášení o shodě je k dispozici na této internetové adrese:
https://www.denso-ten.com/support/regulation/eu_doc/

Funkce	Provozní frekvenční pásmu	Maximální radiofrekvenční výkon
GSM	880~915 MHz 1710~1785 MHz	35dBm e.i.r.p. 32dBm e.i.r.p.
UMTS	880~915 MHz 1920~1980 MHz	25dBm e.i.r.p. 25dBm e.i.r.p.
LTE	832~862 MHz 880~915 MHz 1710~1785 MHz 1920~1980 MHz 2500~2570 MHz	24dBm e.i.r.p. 24dBm e.i.r.p. 24dBm e.i.r.p. 24dBm e.i.r.p. 24dBm e.i.r.p

Hermed erklærer DENSO TEN Limited, at radioudstyrstypen TN0027A er i overensstemmelse med direktiv 2014/53/EU.
EU-overensstemmelseserklæringens fulde tekst kan findes på følgende internetadresse:
https://www.denso-ten.com/support/regulation/eu_doc/

Funktion	Driftsfrekvensbandet	Maksimal radio-frekvens effekt
GSM	880~915 MHz 1710~1785 MHz	35dBm e.i.r.p. 32dBm e.i.r.p.
UMTS	880~915 MHz 1920~1980 MHz	25dBm e.i.r.p. 25dBm e.i.r.p.
LTE	832~862 MHz 880~915 MHz 1710~1785 MHz 1920~1980 MHz 2500~2570 MHz	24dBm e.i.r.p. 24dBm e.i.r.p. 24dBm e.i.r.p. 24dBm e.i.r.p. 24dBm e.i.r.p

Hiermit erklärt DENSO TEN Limited, dass der Funkanlagentyp TN0027A der Richtlinie 2014/53/EU entspricht.
Der vollständige Text der EU-Konformitätserklärung ist unter der folgenden Internetadresse verfügbar:
https://www.denso-ten.com/support/regulation/eu_doc/

Funktion	Betriebsfrequenzband	Maximale Hochfrequenzleistung
GSM	880~915 MHz 1710~1785 MHz	35dBm e.i.r.p. 32dBm e.i.r.p.
UMTS	880~915 MHz 1920~1980 MHz	25dBm e.i.r.p. 25dBm e.i.r.p.
LTE	832~862 MHz 880~915 MHz 1710~1785 MHz 1920~1980 MHz 2500~2570 MHz	24dBm e.i.r.p. 24dBm e.i.r.p. 24dBm e.i.r.p. 24dBm e.i.r.p. 24dBm e.i.r.p

Με την παρούσα ο/η DENSO TEN Limited, δηλώνει ότι ο ραδιοεξοπλισμός TN0027A πληροί την οδηγία 2014/53/ΕΕ.
Το πλήρες κείμενο της δήλωσης συμμόρφωσης ΕΕ διατίθεται στην ακόλουθη ιστοσελίδα στο διαδίκτυο:
https://www.denso-ten.com/support/regulation/eu_doc/

Λειτουργία	Ζώνη συχνοτήτων λειτουργίας	Μέγιστη ισχύς ραδιοσυχνότητας
GSM	880~915 MHz 1710~1785 MHz	35dBm e.i.r.p. 32dBm e.i.r.p.
UMTS	880~915 MHz 1920~1980 MHz	25dBm e.i.r.p. 25dBm e.i.r.p.
LTE	832~862 MHz 880~915 MHz 1710~1785 MHz 1920~1980 MHz 2500~2570 MHz	24dBm e.i.r.p. 24dBm e.i.r.p. 24dBm e.i.r.p. 24dBm e.i.r.p. 24dBm e.i.r.p

Hereby, DENSO TEN Limited declares that the radio equipment type TN0027A is in compliance with Directive 2014/53/EU.
The full text of the EU declaration of conformity is available at the following internet address:
https://www.denso-ten.com/support/regulation/eu_doc/

Function	Operating frequency band	Maximum radio-frequency power
GSM	880~915 MHz 1710~1785 MHz	35dBm e.i.r.p. 32dBm e.i.r.p.
UMTS	880~915 MHz 1920~1980 MHz	25dBm e.i.r.p. 25dBm e.i.r.p.
LTE	832~862 MHz 880~915 MHz 1710~1785 MHz 1920~1980 MHz 2500~2570 MHz	24dBm e.i.r.p. 24dBm e.i.r.p. 24dBm e.i.r.p. 24dBm e.i.r.p. 24dBm e.i.r.p

Por la presente, DENSO TEN Limited declara que el tipo de equipo radioeléctrico TN0027A es conforme con la Directiva 2014/53/UE.
El texto completo de la declaración UE de conformidad está disponible en la dirección Internet siguiente:
https://www.denso-ten.com/support/regulation/eu_doc/

Función	Banda de frecuencia operativa	Potencia máxima de la radiofrecuencia
GSM	880~915 MHz 1710~1785 MHz	35dBm e.i.r.p. 32dBm e.i.r.p.
UMTS	880~915 MHz 1920~1980 MHz	25dBm e.i.r.p. 25dBm e.i.r.p.
LTE	832~862 MHz 880~915 MHz 1710~1785 MHz 1920~1980 MHz 2500~2570 MHz	24dBm e.i.r.p. 24dBm e.i.r.p. 24dBm e.i.r.p. 24dBm e.i.r.p. 24dBm e.i.r.p

Käesolevaga deklareerib DENSO TEN Limited, et käesolev raadioseadme tüüp TN0027A vastab direktiivi 2014/53/EL nõuetele.
ELi vastavusdeklaratsiooni täielik tekst on kättesaadav järgmisel internetiaadressil:
https://www.denso-ten.com/support/regulation/eu_doc/

Funktsioon	Töösageduse laineala	Maksimaalne raadiosageduslik võimsus
GSM	880~915 MHz 1710~1785 MHz	35dBm e.i.r.p. 32dBm e.i.r.p.
UMTS	880~915 MHz 1920~1980 MHz	25dBm e.i.r.p. 25dBm e.i.r.p.
LTE	832~862 MHz 880~915 MHz 1710~1785 MHz 1920~1980 MHz 2500~2570 MHz	24dBm e.i.r.p. 24dBm e.i.r.p. 24dBm e.i.r.p. 24dBm e.i.r.p. 24dBm e.i.r.p

DENSO TEN Limited vakuuttaa, että radiolaitetyyppi TN0027A on direktiivin 2014/53/EU mukainen.
EU-vaatimustenmukaisuusvakuutuksen täysimittainen teksti on saatavilla seuraavassa internetosoitteessa:
https://www.denso-ten.com/support/regulation/eu_doc/

Toiminto	Toimintataajuuskaista	Maksimi radiotaajuusteho
GSM	880~915 MHz 1710~1785 MHz	35dBm e.i.r.p. 32dBm e.i.r.p.
UMTS	880~915 MHz 1920~1980 MHz	25dBm e.i.r.p. 25dBm e.i.r.p.
LTE	832~862 MHz 880~915 MHz 1710~1785 MHz 1920~1980 MHz 2500~2570 MHz	24dBm e.i.r.p. 24dBm e.i.r.p. 24dBm e.i.r.p. 24dBm e.i.r.p. 24dBm e.i.r.p

Le soussigné, DENSO TEN Limited, déclare que l'équipement radioélectrique du type TN0027A est conforme à la directive 2014/53/UE.
Le texte complet de la déclaration UE de conformité est disponible à l'adresse internet suivante:
https://www.denso-ten.com/support/regulation/eu_doc/

Fonction	Bande de fréquence de fonctionnement	Puissance maximale de la radiofréquence
GSM	880~915 MHz 1710~1785 MHz	35dBm e.i.r.p. 32dBm e.i.r.p.
UMTS	880~915 MHz 1920~1980 MHz	25dBm e.i.r.p. 25dBm e.i.r.p.
LTE	832~862 MHz 880~915 MHz 1710~1785 MHz 1920~1980 MHz 2500~2570 MHz	24dBm e.i.r.p. 24dBm e.i.r.p. 24dBm e.i.r.p. 24dBm e.i.r.p. 24dBm e.i.r.p

Leis seo, dearbhaíonn DENSO TEN Limited go gcomhlíonann an cineál trealaimh raidió TN0027A Treoir 2014/53/EU.
Tá an téacs iomlán den dearbhú comhréireachta AE ar fáil ag an seoladh Idirlín seo a leanas:
https://www.denso-ten.com/support/regulation/eu_doc/

Feidhm	Banda minicíochta oibriúcháin	Uaschumhacht radaimhinicíochta
GSM	880~915 MHz 1710~1785 MHz	35dBm e.i.r.p. 32dBm e.i.r.p.
UMTS	880~915 MHz 1920~1980 MHz	25dBm e.i.r.p. 25dBm e.i.r.p.
LTE	832~862 MHz 880~915 MHz 1710~1785 MHz 1920~1980 MHz 2500~2570 MHz	24dBm e.i.r.p. 24dBm e.i.r.p. 24dBm e.i.r.p. 24dBm e.i.r.p. 24dBm e.i.r.p

DENSO TEN Limited ovime izjavljuje da je radijska oprema tipa TN0027A u skladu s Direktivom 2014/53/EU.
Cjeloviti tekst EU izjave o sukladnosti dostupan je na sljedećoj internetskoj adresi:
https://www.denso-ten.com/support/regulation/eu_doc/

Funkcija	Radni frekvencijski pojas	Maksimalna rediofrekvencijska snaga
GSM	880~915 MHz 1710~1785 MHz	35dBm e.i.r.p. 32dBm e.i.r.p.
UMTS	880~915 MHz 1920~1980 MHz	25dBm e.i.r.p. 25dBm e.i.r.p.
LTE	832~862 MHz 880~915 MHz 1710~1785 MHz 1920~1980 MHz 2500~2570 MHz	24dBm e.i.r.p. 24dBm e.i.r.p. 24dBm e.i.r.p. 24dBm e.i.r.p. 24dBm e.i.r.p

DENSO TEN Limited igazolja, hogy a TN0027A típusú rádióberendezés megfelel a 2014/53/EU irányelvnek.
Az EU-megfelelőségi nyilatkozat teljes szövege elérhető a következő internetes címen:
https://www.denso-ten.com/support/regulation/eu_doc/

Funkció	Üzemi frekvencia-tartomány	Maximális rádiófrekvenciás teljesítmény
GSM	880~915 MHz 1710~1785 MHz	35dBm e.i.r.p. 32dBm e.i.r.p.
UMTS	880~915 MHz 1920~1980 MHz	25dBm e.i.r.p. 25dBm e.i.r.p.
LTE	832~862 MHz 880~915 MHz 1710~1785 MHz 1920~1980 MHz 2500~2570 MHz	24dBm e.i.r.p. 24dBm e.i.r.p. 24dBm e.i.r.p. 24dBm e.i.r.p. 24dBm e.i.r.p

Hér með, lýsir DENSO TEN Limited því yfir að gerð útvarpsbúnaðarins TN0027A samræmist tilskipun 2014/53/EU.
Allur texti ESB-samræmisyfirlýsingarinnar er aðgengilegur á eftirfarandi veffangi:
https://www.denso-ten.com/support/regulation/eu_doc/

Aðgerð	Notkunartíðni hljómsveit	Hámarks útvarp-tíðni vald
GSM	880~915 MHz 1710~1785 MHz	35dBm e.i.r.p. 32dBm e.i.r.p.
UMTS	880~915 MHz 1920~1980 MHz	25dBm e.i.r.p. 25dBm e.i.r.p.
LTE	832~862 MHz 880~915 MHz 1710~1785 MHz 1920~1980 MHz 2500~2570 MHz	24dBm e.i.r.p. 24dBm e.i.r.p. 24dBm e.i.r.p. 24dBm e.i.r.p. 24dBm e.i.r.p

Il fabbricante, DENSO TEN Limited, dichiara che il tipo di apparecchiatura radio TN0027A è conforme alla direttiva 2014/53/UE.
Il testo completo della dichiarazione di conformità UE è disponibile al seguente indirizzo Internet:
https://www.denso-ten.com/support/regulation/eu_doc/

Funzione	Frequenza operativa	Massima potenza a radiofrequenza
GSM	880~915 MHz 1710~1785 MHz	35dBm e.i.r.p. 32dBm e.i.r.p.
UMTS	880~915 MHz 1920~1980 MHz	25dBm e.i.r.p. 25dBm e.i.r.p.
LTE	832~862 MHz 880~915 MHz 1710~1785 MHz 1920~1980 MHz 2500~2570 MHz	24dBm e.i.r.p. 24dBm e.i.r.p. 24dBm e.i.r.p. 24dBm e.i.r.p. 24dBm e.i.r.p

Aš, DENSO TEN Limited, patvirtinu, kad radijo įrenginių tipas TN0027A atitinka Direktyvą 2014/53/ES.
Visas ES atitikties deklaracijos tekstas prieinamas šiuo interneto adresu:
https://www.denso-ten.com/support/regulation/eu_doc/

Funkcija	Veikimo dažnių juosta	Maksimalus radijo dažnių galingumas
GSM	880~915 MHz 1710~1785 MHz	35dBm e.i.r.p. 32dBm e.i.r.p.
UMTS	880~915 MHz 1920~1980 MHz	25dBm e.i.r.p. 25dBm e.i.r.p.
LTE	832~862 MHz 880~915 MHz 1710~1785 MHz 1920~1980 MHz 2500~2570 MHz	24dBm e.i.r.p. 24dBm e.i.r.p. 24dBm e.i.r.p. 24dBm e.i.r.p. 24dBm e.i.r.p

Ar šo DENSO TEN Limited deklarē, ka radioiekārta TN0027A atbilst Direktīvai 2014/53/ES.
Pilns ES atbilstības deklarācijas teksts ir pieejams šādā interneta vietnē:
https://www.denso-ten.com/support/regulation/eu_doc/

Funkcija	Darba frekvences josla	Maksimālā radiofrekvences jauda
GSM	880~915 MHz 1710~1785 MHz	35dBm e.i.r.p. 32dBm e.i.r.p.
UMTS	880~915 MHz 1920~1980 MHz	25dBm e.i.r.p. 25dBm e.i.r.p.
LTE	832~862 MHz 880~915 MHz 1710~1785 MHz 1920~1980 MHz 2500~2570 MHz	24dBm e.i.r.p. 24dBm e.i.r.p. 24dBm e.i.r.p. 24dBm e.i.r.p. 24dBm e.i.r.p

Со ова, DENSO TEN Limited изјавува дека радио опремата од типот TN0027A е во согласност со Директивата 2014/53/EU.
Целиот текст на ЕУ изјавата за сообразност е достапен на следната интернет адреса:
https://www.denso-ten.com/support/regulation/eu_doc/

Функција	Работен фреквенциски опсег	Максимална радио-фреквенциска моќ
GSM	880~915 MHz 1710~1785 MHz	35dBm e.i.r.p. 32dBm e.i.r.p.
UMTS	880~915 MHz 1920~1980 MHz	25dBm e.i.r.p. 25dBm e.i.r.p.
LTE	832~862 MHz 880~915 MHz 1710~1785 MHz 1920~1980 MHz 2500~2570 MHz	24dBm e.i.r.p. 24dBm e.i.r.p. 24dBm e.i.r.p. 24dBm e.i.r.p. 24dBm e.i.r.p

Ovim, DENSO TEN Limited izjavljuje da je tip radio opreme TN0027A u skladu sa Direktivom 2014/53/EU.
Cjelokupan tekst EU deklaracije o usklađenosti dostupan je na sljedećoj internet adresi:
https://www.denso-ten.com/support/regulation/eu_doc/

Funkcija	Operativni frekvencijski opseg	Maksimalna jačina radio frekvencije
GSM	880~915 MHz 1710~1785 MHz	35dBm e.i.r.p. 32dBm e.i.r.p.
UMTS	880~915 MHz 1920~1980 MHz	25dBm e.i.r.p. 25dBm e.i.r.p.
LTE	832~862 MHz 880~915 MHz 1710~1785 MHz 1920~1980 MHz 2500~2570 MHz	24dBm e.i.r.p. 24dBm e.i.r.p. 24dBm e.i.r.p. 24dBm e.i.r.p. 24dBm e.i.r.p

B'dan, DENSO TEN Limited, niddikjara li dan it-tip ta' tagħmir tar-radju TN0027A huwa konformi mad-Direttiva 2014/53/UE.
It-test kollu tad-dikjarazzjoni ta' konformità tal-UE huwa disponibbli f'dan l-indirizz tal-Internet li ġej:
https://www.denso-ten.com/support/regulation/eu_doc/

Funzjoni	Band tal-frekwenza operattiva	l-enerġija massima bi frekwenza tar-radju
GSM	880~915 MHz 1710~1785 MHz	35dBm e.i.r.p. 32dBm e.i.r.p.
UMTS	880~915 MHz 1920~1980 MHz	25dBm e.i.r.p. 25dBm e.i.r.p.
LTE	832~862 MHz 880~915 MHz 1710~1785 MHz 1920~1980 MHz 2500~2570 MHz	24dBm e.i.r.p. 24dBm e.i.r.p. 24dBm e.i.r.p. 24dBm e.i.r.p. 24dBm e.i.r.p

Hierbij verklaar ik, DENSO TEN Limited, dat het type radioapparatuur TN0027A conform is met Richtlijn 2014/53/EU.
De volledige tekst van de EU-conformiteitsverklaring kan worden geraadpleegd op het volgende internetadres:
https://www.denso-ten.com/support/regulation/eu_doc/

Functie	Actieve frequentieband	Maximale radiofrequentie
GSM	880~915 MHz 1710~1785 MHz	35dBm e.i.r.p. 32dBm e.i.r.p.
UMTS	880~915 MHz 1920~1980 MHz	25dBm e.i.r.p. 25dBm e.i.r.p.
LTE	832~862 MHz 880~915 MHz 1710~1785 MHz 1920~1980 MHz 2500~2570 MHz	24dBm e.i.r.p. 24dBm e.i.r.p. 24dBm e.i.r.p. 24dBm e.i.r.p. 24dBm e.i.r.p

DENSO TEN Limited erklærer herved at radioutstyrstypen TN0027A er i samsvar med direktiv 2014/53/EU.
Den fullstendige teksten i EU-erklæringen er tilgjengelig på følgende internettadresse:
https://www.denso-ten.com/support/regulation/eu_doc/

Funksjon	Driftsfrekvensbånd	Maksimal radiofrekvent strøm
GSM	880~915 MHz 1710~1785 MHz	35dBm e.i.r.p. 32dBm e.i.r.p.
UMTS	880~915 MHz 1920~1980 MHz	25dBm e.i.r.p. 25dBm e.i.r.p.
LTE	832~862 MHz 880~915 MHz 1710~1785 MHz 1920~1980 MHz 2500~2570 MHz	24dBm e.i.r.p. 24dBm e.i.r.p. 24dBm e.i.r.p. 24dBm e.i.r.p. 24dBm e.i.r.p

DENSO TEN Limited niniejszym oświadcza, że typ urządzenia radiowego TN0027A jest zgodny z dyrektywą 2014/53/UE.
Pełny tekst deklaracji zgodności UE jest dostępny pod następującym adresem internetowym:
https://www.denso-ten.com/support/regulation/eu_doc/

Funkcja	Pasmo częstotliwości pracy	Maksymalna moc częstotliwości radiowej
GSM	880~915 MHz 1710~1785 MHz	35dBm e.i.r.p. 32dBm e.i.r.p.
UMTS	880~915 MHz 1920~1980 MHz	25dBm e.i.r.p. 25dBm e.i.r.p.
LTE	832~862 MHz 880~915 MHz 1710~1785 MHz 1920~1980 MHz 2500~2570 MHz	24dBm e.i.r.p. 24dBm e.i.r.p. 24dBm e.i.r.p. 24dBm e.i.r.p. 24dBm e.i.r.p

O(a) abaixo assinado(a) DENSO TEN Limited declara que o presente tipo de equipamento de rádio TN0027A está em conformidade com a Diretiva 2014/53/UE.
O texto integral da declaração de conformidade está disponível no seguinte endereço de Internet:
https://www.denso-ten.com/support/regulation/eu_doc/

Função	Faixa de freqüência operacional	Potência máxima de radiofreqüência
GSM	880~915 MHz 1710~1785 MHz	35dBm e.i.r.p. 32dBm e.i.r.p.
UMTS	880~915 MHz 1920~1980 MHz	25dBm e.i.r.p. 25dBm e.i.r.p.
LTE	832~862 MHz 880~915 MHz 1710~1785 MHz 1920~1980 MHz 2500~2570 MHz	24dBm e.i.r.p. 24dBm e.i.r.p. 24dBm e.i.r.p. 24dBm e.i.r.p. 24dBm e.i.r.p

Prin prezenta, DENSO TEN Limited declară că tipul de echipamente radio TN0027A este în conformitate cu Directiva 2014/53/UE.
Textul integral al declarației UE de conformitate este disponibil la următoarea adresă internet:
https://www.denso-ten.com/support/regulation/eu_doc/

Funcție	Bandă de frecvență activă	Puterea maximă a radio-frecvenței
GSM	880~915 MHz 1710~1785 MHz	35dBm e.i.r.p. 32dBm e.i.r.p.
UMTS	880~915 MHz 1920~1980 MHz	25dBm e.i.r.p. 25dBm e.i.r.p.
LTE	832~862 MHz 880~915 MHz 1710~1785 MHz 1920~1980 MHz 2500~2570 MHz	24dBm e.i.r.p. 24dBm e.i.r.p. 24dBm e.i.r.p. 24dBm e.i.r.p. 24dBm e.i.r.p

DENSO TEN Limited týmto vyhlasuje, že rádiové zariadenie typu TN0027A je v súlade so smernicou 2014/53/EÚ.
Úplné EÚ vyhlásenie o zhode je k dispozícii na tejto internetovej adrese:
https://www.denso-ten.com/support/regulation/eu_doc/

Funkcia	Prevádzkové frekvenčné pásmo	Maximálny rádiofrekvenčný výkon
GSM	880~915 MHz 1710~1785 MHz	35dBm e.i.r.p. 32dBm e.i.r.p.
UMTS	880~915 MHz 1920~1980 MHz	25dBm e.i.r.p. 25dBm e.i.r.p.
LTE	832~862 MHz 880~915 MHz 1710~1785 MHz 1920~1980 MHz 2500~2570 MHz	24dBm e.i.r.p. 24dBm e.i.r.p. 24dBm e.i.r.p. 24dBm e.i.r.p. 24dBm e.i.r.p

DENSO TEN Limited potrjuje, da je tip radijske opreme TN0027A skladen z Direktivo 2014/53/EU.
Celotno besedilo izjave EU o skladnosti je na voljo na naslednjem spletnem naslovu:
https://www.denso-ten.com/support/regulation/eu_doc/

Funkcija	Delovni frekvenčni pas	Maksimalna radiofrekvenčna moč
GSM	880~915 MHz 1710~1785 MHz	35dBm e.i.r.p. 32dBm e.i.r.p.
UMTS	880~915 MHz 1920~1980 MHz	25dBm e.i.r.p. 25dBm e.i.r.p.
LTE	832~862 MHz 880~915 MHz 1710~1785 MHz 1920~1980 MHz 2500~2570 MHz	24dBm e.i.r.p. 24dBm e.i.r.p. 24dBm e.i.r.p. 24dBm e.i.r.p. 24dBm e.i.r.p

Nëpërmjet kësaj, DENSO TEN Limited deklaron se lloji i aparatit të radios TN0027A është në përputhje me Direktivën 2014/53/EU.
Teksti i plotë i deklaratës së BE-së mbi përputhshmërinë është i disponueshëm në adresën e mëposhtme të internetit:
https://www.denso-ten.com/support/regulation/eu_doc/

Funksion	Banda e frekuencës së punës	Fuqia maksimale e frekuencave radio
GSM	880~915 MHz 1710~1785 MHz	35dBm e.i.r.p. 32dBm e.i.r.p.
UMTS	880~915 MHz 1920~1980 MHz	25dBm e.i.r.p. 25dBm e.i.r.p.
LTE	832~862 MHz 880~915 MHz 1710~1785 MHz 1920~1980 MHz 2500~2570 MHz	24dBm e.i.r.p. 24dBm e.i.r.p. 24dBm e.i.r.p. 24dBm e.i.r.p. 24dBm e.i.r.p

Ovim, DENSO TEN Limited izjavljuje da je ovaj tip radijske opreme TN0027A u skladu sa odredbama Direktive 2014/53/EU.
Kompletan tekst EU deklaracije o konformitetu je dostupan na sledećoj internet adresi:
https://www.denso-ten.com/support/regulation/eu_doc/

Funkcija	Radni frekvencijski pojas	Maksimalna rediofrekvencijska snaga
GSM	880~915 MHz 1710~1785 MHz	35dBm e.i.r.p. 32dBm e.i.r.p.
UMTS	880~915 MHz 1920~1980 MHz	25dBm e.i.r.p. 25dBm e.i.r.p.
LTE	832~862 MHz 880~915 MHz 1710~1785 MHz 1920~1980 MHz 2500~2570 MHz	24dBm e.i.r.p. 24dBm e.i.r.p. 24dBm e.i.r.p. 24dBm e.i.r.p. 24dBm e.i.r.p

Härmed försäkrar DENSO TEN Limited att denna typ av radioutrustning TN0027A överensstämmer med direktiv 2014/53/EU.
Den fullständiga texten till EU-försäkran om överensstämmelse finns på följande webbadress:
https://www.denso-ten.com/support/regulation/eu_doc/

Funktion	Operationsfrekvensbandet	Maximal radiofrekvenseffekt
GSM	880~915 MHz 1710~1785 MHz	35dBm e.i.r.p. 32dBm e.i.r.p.
UMTS	880~915 MHz 1920~1980 MHz	25dBm e.i.r.p. 25dBm e.i.r.p.
LTE	832~862 MHz 880~915 MHz 1710~1785 MHz 1920~1980 MHz 2500~2570 MHz	24dBm e.i.r.p. 24dBm e.i.r.p. 24dBm e.i.r.p. 24dBm e.i.r.p. 24dBm e.i.r.p

DENSO TEN Limited, TN0027A türü telsiz ekipmanının 2014/53/EU Direktifine uygun olduğunu beyan etmektedir.
AB uygunluk beyanının tam metnine aşağıdaki internet adresinden ulaşılabilir:
https://www.denso-ten.com/support/regulation/eu_doc/

İşlev	Çalışma frekans bandı	Maksimum radyo-frekans gücü
GSM	880~915 MHz 1710~1785 MHz	35dBm e.i.r.p. 32dBm e.i.r.p.
UMTS	880~915 MHz 1920~1980 MHz	25dBm e.i.r.p. 25dBm e.i.r.p.
LTE	832~862 MHz 880~915 MHz 1710~1785 MHz 1920~1980 MHz 2500~2570 MHz	24dBm e.i.r.p. 24dBm e.i.r.p. 24dBm e.i.r.p. 24dBm e.i.r.p. 24dBm e.i.r.p

Information of the radio device: Type TN0027A

1. Name and postal address of the manufacturer

   Name: DENSO TEN Limited
   Address: 2-28, Gosho-dori 1-chome, Hyogo-ku, Kobe, 652-8510 Japan

2. Simplified UK declaration of conformity

Hereby, DENSO TEN Limited declares that the radio equipment type TN0027A is in compliance with Regulations 2017.
The full text of the UK declaration of conformity is available at the following internet address:
https://www.denso-ten.com/support/regulation/uk_doc/

Function	Operating frequency band	Maximum radio-frequency power
GSM	880~915 MHz 1710~1785 MHz	35dBm e.i.r.p. 32dBm e.i.r.p.
UMTS	880~915 MHz 1920~1980 MHz	25dBm e.i.r.p. 25dBm e.i.r.p.
LTE	832~862 MHz 880~915 MHz 1710~1785 MHz 1920~1980 MHz 2500~2570 MHz	24dBm e.i.r.p. 24dBm e.i.r.p. 24dBm e.i.r.p. 24dBm e.i.r.p. 24dBm e.i.r.p.

Information of the radio device: Type TN0027G

1. Name and postal address of the manufacturer

   Name: DENSO TEN Limited
   Address: 2-28, Gosho-dori 1-chome, Hyogo-ku, Kobe, 652-8510 Japan

2. Simplified EU declaration of conformity

С настоящото DENSO TEN Limited декларира, че този тип радиосъоръжение TN0027G е в съответствие с Директива 2014/53/ЕС.
Цялостният текст на ЕС декларацията за съответствие може да се намери на следния интернет адрес:
https://www.denso-ten.com/support/regulation/eu_doc/

Функция	Работна честотна лента	Максимална радиочестотна мощност
GSM	880~915 MHz 1710~1785 MHz	35dBm e.i.r.p. 32dBm e.i.r.p.
UMTS	880~915 MHz 1920~1980 MHz	25dBm e.i.r.p. 25dBm e.i.r.p.

Ovim putem, DENSO TEN Limited izjavljuje da je vrsta radio opreme TN0027G u saglasnosti s Direktivom 2014/53/EU.
Cijeli tekst EC deklaracije o usaglašenosti je dostupan na sljedećoj internetskoj adresi:
https://www.denso-ten.com/support/regulation/eu_doc/

Funkcija	Radni frekvencijski pojas	Maksimalna rediofrekvencijska snaga
GSM	880~915 MHz 1710~1785 MHz	35dBm e.i.r.p. 32dBm e.i.r.p.
UMTS	880~915 MHz 1920~1980 MHz	25dBm e.i.r.p. 25dBm e.i.r.p.

Tímto DENSO TEN Limited prohlašuje, že typ rádiového zařízení TN0027G je v souladu se směrnicí 2014/53/EU.
Úplné znění EU prohlášení o shodě je k dispozici na této internetové adrese:
https://www.denso-ten.com/support/regulation/eu_doc/

Funkce	Provozní frekvenční pásmu	Maximální radiofrekvenční výkon
GSM	880~915 MHz 1710~1785 MHz	35dBm e.i.r.p. 32dBm e.i.r.p.
UMTS	880~915 MHz 1920~1980 MHz	25dBm e.i.r.p. 25dBm e.i.r.p.

Hermed erklærer DENSO TEN Limited, at radioudstyrstypen TN0027G er i overensstemmelse med direktiv 2014/53/EU.
EU-overensstemmelseserklæringens fulde tekst kan findes på følgende internetadresse:
https://www.denso-ten.com/support/regulation/eu_doc/

Funktion	Driftsfrekvensbandet	Maksimal radio-frekvens effekt
GSM	880~915 MHz 1710~1785 MHz	35dBm e.i.r.p. 32dBm e.i.r.p.
UMTS	880~915 MHz 1920~1980 MHz	25dBm e.i.r.p. 25dBm e.i.r.p.

Hiermit erklärt DENSO TEN Limited, dass der Funkanlagentyp TN0027G der Richtlinie 2014/53/EU entspricht.
Der vollständige Text der EU-Konformitätserklärung ist unter der folgenden Internetadresse verfügbar:
https://www.denso-ten.com/support/regulation/eu_doc/

Funktion	Betriebsfrequenzband	Maximale Hochfrequenzleistung
GSM	880~915 MHz 1710~1785 MHz	35dBm e.i.r.p. 32dBm e.i.r.p.
UMTS	880~915 MHz 1920~1980 MHz	25dBm e.i.r.p. 25dBm e.i.r.p.

Με την παρούσα ο/η DENSO TEN Limited, δηλώνει ότι ο ραδιοεξοπλισμός TN0027G πληροί την οδηγία 2014/53/ΕΕ.
Το πλήρες κείμενο της δήλωσης συμμόρφωσης ΕΕ διατίθεται στην ακόλουθη ιστοσελίδα στο διαδίκτυο:
https://www.denso-ten.com/support/regulation/eu_doc/

Λειτουργία	Ζώνη συχνοτήτων λειτουργίας	Μέγιστη ισχύς ραδιοσυχνότητας
GSM	880~915 MHz 1710~1785 MHz	35dBm e.i.r.p. 32dBm e.i.r.p.
UMTS	880~915 MHz 1920~1980 MHz	25dBm e.i.r.p. 25dBm e.i.r.p.

Hereby, DENSO TEN Limited declares that the radio equipment type TN0027G is in compliance with Directive 2014/53/EU.
The full text of the EU declaration of conformity is available at the following internet address:
https://www.denso-ten.com/support/regulation/eu_doc/

Function	Operating frequency band	Maximum radio-frequency power
GSM	880~915 MHz 1710~1785 MHz	35dBm e.i.r.p. 32dBm e.i.r.p.
UMTS	880~915 MHz 1920~1980 MHz	25dBm e.i.r.p. 25dBm e.i.r.p.

Por la presente, DENSO TEN Limited declara que el tipo de equipo radioeléctrico TN0027G es conforme con la Directiva 2014/53/UE.
El texto completo de la declaración UE de conformidad está disponible en la dirección Internet siguiente:
https://www.denso-ten.com/support/regulation/eu_doc/

Función	Banda de frecuencia operativa	Potencia máxima de la radiofrecuencia
GSM	880~915 MHz 1710~1785 MHz	35dBm e.i.r.p. 32dBm e.i.r.p.
UMTS	880~915 MHz 1920~1980 MHz	25dBm e.i.r.p. 25dBm e.i.r.p.

Käesolevaga deklareerib DENSO TEN Limited, et käesolev raadioseadme tüüp TN0027G vastab direktiivi 2014/53/EL nõuetele.
ELi vastavusdeklaratsiooni täielik tekst on kättesaadav järgmisel internetiaadressil:
https://www.denso-ten.com/support/regulation/eu_doc/

Funktsioon	Töösageduse laineala	Maksimaalne raadiosageduslik võimsus
GSM	880~915 MHz 1710~1785 MHz	35dBm e.i.r.p. 32dBm e.i.r.p.
UMTS	880~915 MHz 1920~1980 MHz	25dBm e.i.r.p. 25dBm e.i.r.p.

DENSO TEN Limited vakuuttaa, että radiolaitetyyppi TN0027G on direktiivin 2014/53/EU mukainen.
EU-vaatimustenmukaisuusvakuutuksen täysimittainen teksti on saatavilla seuraavassa internetosoitteessa:
https://www.denso-ten.com/support/regulation/eu_doc/

Toiminto	Toimintataajuuskaista	Maksimi radiotaajuusteho
GSM	880~915 MHz 1710~1785 MHz	35dBm e.i.r.p. 32dBm e.i.r.p.
UMTS	880~915 MHz 1920~1980 MHz	25dBm e.i.r.p. 25dBm e.i.r.p.

Le soussigné, DENSO TEN Limited, déclare que l'équipement radioélectrique du type TN0027G est conforme à la directive 2014/53/UE.
Le texte complet de la déclaration UE de conformité est disponible à l'adresse internet suivante:
https://www.denso-ten.com/support/regulation/eu_doc/

Fonction	Bande de fréquence de fonctionnement	Puissance maximale de la radiofréquence
GSM	880~915 MHz 1710~1785 MHz	35dBm e.i.r.p. 32dBm e.i.r.p.
UMTS	880~915 MHz 1920~1980 MHz	25dBm e.i.r.p. 25dBm e.i.r.p.

Leis seo, dearbhaíonn DENSO TEN Limited go gcomhlíonann an cineál trealaimh raidió TN0027G Treoir 2014/53/EU.
Tá an téacs iomlán den dearbhú comhréireachta AE ar fáil ag an seoladh Idirlín seo a leanas:
https://www.denso-ten.com/support/regulation/eu_doc/

Feidhm	Banda minicíochta oibriúcháin	Uaschumhacht radaimhinicíochta
GSM	880~915 MHz 1710~1785 MHz	35dBm e.i.r.p. 32dBm e.i.r.p.
UMTS	880~915 MHz 1920~1980 MHz	25dBm e.i.r.p. 25dBm e.i.r.p.

DENSO TEN Limited ovime izjavljuje da je radijska oprema tipa TN0027G u skladu s Direktivom 2014/53/EU.
Cjeloviti tekst EU izjave o sukladnosti dostupan je na sljedećoj internetskoj adresi:
https://www.denso-ten.com/support/regulation/eu_doc/

Funkcija	Radni frekvencijski pojas	Maksimalna rediofrekvencijska snaga
GSM	880~915 MHz 1710~1785 MHz	35dBm e.i.r.p. 32dBm e.i.r.p.
UMTS	880~915 MHz 1920~1980 MHz	25dBm e.i.r.p. 25dBm e.i.r.p.

DENSO TEN Limited igazolja, hogy a TN0027G típusú rádióberendezés megfelel a 2014/53/EU irányelvnek.
Az EU-megfelelőségi nyilatkozat teljes szövege elérhető a következő internetes címen:
https://www.denso-ten.com/support/regulation/eu_doc/

Funkció	Üzemi frekvencia-tartomány	Maximális rádiófrekvenciás teljesítmény
GSM	880~915 MHz 1710~1785 MHz	35dBm e.i.r.p. 32dBm e.i.r.p.
UMTS	880~915 MHz 1920~1980 MHz	25dBm e.i.r.p. 25dBm e.i.r.p.

Hér með, lýsir DENSO TEN Limited því yfir að gerð útvarpsbúnaðarins TN0027G samræmist tilskipun 2014/53/EU.
Allur texti ESB-samræmisyfirlýsingarinnar er aðgengilegur á eftirfarandi veffangi:
https://www.denso-ten.com/support/regulation/eu_doc/

Aðgerð	Notkunartíðni hljómsveit	Hámarks útvarp-tíðni vald
GSM	880~915 MHz 1710~1785 MHz	35dBm e.i.r.p. 32dBm e.i.r.p.
UMTS	880~915 MHz 1920~1980 MHz	25dBm e.i.r.p. 25dBm e.i.r.p.

Il fabbricante, DENSO TEN Limited, dichiara che il tipo di apparecchiatura radio TN0027G è conforme alla direttiva 2014/53/UE.
Il testo completo della dichiarazione di conformità UE è disponibile al seguente indirizzo Internet:
https://www.denso-ten.com/support/regulation/eu_doc/

Funzione	Frequenza operativa	Massima potenza a radiofrequenza
GSM	880~915 MHz 1710~1785 MHz	35dBm e.i.r.p. 32dBm e.i.r.p.
UMTS	880~915 MHz 1920~1980 MHz	25dBm e.i.r.p. 25dBm e.i.r.p.

Aš, DENSO TEN Limited, patvirtinu, kad radijo įrenginių tipas TN0027G atitinka Direktyvą 2014/53/ES.
Visas ES atitikties deklaracijos tekstas prieinamas šiuo interneto adresu:
https://www.denso-ten.com/support/regulation/eu_doc/

Funkcija	Veikimo dažnių juosta	Maksimalus radijo dažnių galingumas
GSM	880~915 MHz 1710~1785 MHz	35dBm e.i.r.p. 32dBm e.i.r.p.
UMTS	880~915 MHz 1920~1980 MHz	25dBm e.i.r.p. 25dBm e.i.r.p.

Ar šo DENSO TEN Limited deklarē, ka radioiekārta TN0027G atbilst Direktīvai 2014/53/ES.
Pilns ES atbilstības deklarācijas teksts ir pieejams šādā interneta vietnē:
https://www.denso-ten.com/support/regulation/eu_doc/

Funkcija	Darba frekvences josla	Maksimālā radiofrekvences jauda
GSM	880~915 MHz 1710~1785 MHz	35dBm e.i.r.p. 32dBm e.i.r.p.
UMTS	880~915 MHz 1920~1980 MHz	25dBm e.i.r.p. 25dBm e.i.r.p.

Со ова, DENSO TEN Limited изјавува дека радио опремата од типот TN0027G е во согласност со Директивата 2014/53/EU.
Целиот текст на ЕУ изјавата за сообразност е достапен на следната интернет адреса:
https://www.denso-ten.com/support/regulation/eu_doc/

Функција	Работен фреквенциски опсег	Максимална радио-фреквенциска моќ
GSM	880~915 MHz 1710~1785 MHz	35dBm e.i.r.p. 32dBm e.i.r.p.
UMTS	880~915 MHz 1920~1980 MHz	25dBm e.i.r.p. 25dBm e.i.r.p.

Ovim, DENSO TEN Limited izjavljuje da je tip radio opreme TN0027G u skladu sa Direktivom 2014/53/EU.
Cjelokupan tekst EU deklaracije o usklađenosti dostupan je na sljedećoj internet adresi:
https://www.denso-ten.com/support/regulation/eu_doc/

Funkcija	Operativni frekvencijski opseg	Maksimalna jačina radio frekvencije
GSM	880~915 MHz 1710~1785 MHz	35dBm e.i.r.p. 32dBm e.i.r.p.
UMTS	880~915 MHz 1920~1980 MHz	25dBm e.i.r.p. 25dBm e.i.r.p.

B'dan, DENSO TEN Limited, niddikjara li dan it-tip ta' tagħmir tar-radju TN0027G huwa konformi mad-Direttiva 2014/53/UE.
It-test kollu tad-dikjarazzjoni ta' konformità tal-UE huwa disponibbli f'dan l-indirizz tal-Internet li ġej:
https://www.denso-ten.com/support/regulation/eu_doc/

Funzjoni	Band tal-frekwenza operattiva	l-enerġija massima bi frekwenza tar-radju
GSM	880~915 MHz 1710~1785 MHz	35dBm e.i.r.p. 32dBm e.i.r.p.
UMTS	880~915 MHz 1920~1980 MHz	25dBm e.i.r.p. 25dBm e.i.r.p.

Hierbij verklaar ik, DENSO TEN Limited, dat het type radioapparatuur TN0027G conform is met Richtlijn 2014/53/EU.
De volledige tekst van de EU-conformiteitsverklaring kan worden geraadpleegd op het volgende internetadres:
https://www.denso-ten.com/support/regulation/eu_doc/

Functie	Actieve frequentieband	Maximale radiofrequentie
GSM	880~915 MHz 1710~1785 MHz	35dBm e.i.r.p. 32dBm e.i.r.p.
UMTS	880~915 MHz 1920~1980 MHz	25dBm e.i.r.p. 25dBm e.i.r.p.

DENSO TEN Limited erklærer herved at radioutstyrstypen TN0027G er i samsvar med direktiv 2014/53/EU.
Den fullstendige teksten i EU-erklæringen er tilgjengelig på følgende internettadresse:
https://www.denso-ten.com/support/regulation/eu_doc/

Funksjon	Driftsfrekvensbånd	Maksimal radiofrekvent strøm
GSM	880~915 MHz 1710~1785 MHz	35dBm e.i.r.p. 32dBm e.i.r.p.
UMTS	880~915 MHz 1920~1980 MHz	25dBm e.i.r.p. 25dBm e.i.r.p.

DENSO TEN Limited niniejszym oświadcza, że typ urządzenia radiowego TN0027G jest zgodny z dyrektywą 2014/53/UE.
Pełny tekst deklaracji zgodności UE jest dostępny pod następującym adresem internetowym:
https://www.denso-ten.com/support/regulation/eu_doc/

Funkcja	Pasmo częstotliwości pracy	Maksymalna moc częstotliwości radiowej
GSM	880~915 MHz 1710~1785 MHz	35dBm e.i.r.p. 32dBm e.i.r.p.
UMTS	880~915 MHz 1920~1980 MHz	25dBm e.i.r.p. 25dBm e.i.r.p.

O(a) abaixo assinado(a) DENSO TEN Limited declara que o presente tipo de equipamento de rádio TN0027G está em conformidade com a Diretiva 2014/53/UE.
O texto integral da declaração de conformidade está disponível no seguinte endereço de Internet:
https://www.denso-ten.com/support/regulation/eu_doc/

Função	Faixa de freqüência operacional	Potência máxima de radiofreqüência
GSM	880~915 MHz 1710~1785 MHz	35dBm e.i.r.p. 32dBm e.i.r.p.
UMTS	880~915 MHz 1920~1980 MHz	25dBm e.i.r.p. 25dBm e.i.r.p.

Prin prezenta, DENSO TEN Limited declară că tipul de echipamente radio TN0027G este în conformitate cu Directiva 2014/53/UE.
Textul integral al declarației UE de conformitate este disponibil la următoarea adresă internet:
https://www.denso-ten.com/support/regulation/eu_doc/

Funcție	Bandă de frecvență activă	Puterea maximă a radio-frecvenței
GSM	880~915 MHz 1710~1785 MHz	35dBm e.i.r.p. 32dBm e.i.r.p.
UMTS	880~915 MHz 1920~1980 MHz	25dBm e.i.r.p. 25dBm e.i.r.p.

DENSO TEN Limited týmto vyhlasuje, že rádiové zariadenie typu TN0027G je v súlade so smernicou 2014/53/EÚ.
Úplné EÚ vyhlásenie o zhode je k dispozícii na tejto internetovej adrese:
https://www.denso-ten.com/support/regulation/eu_doc/

Funkcia	Prevádzkové frekvenčné pásmo	Maximálny rádiofrekvenčný výkon
GSM	880~915 MHz 1710~1785 MHz	35dBm e.i.r.p. 32dBm e.i.r.p.
UMTS	880~915 MHz 1920~1980 MHz	25dBm e.i.r.p. 25dBm e.i.r.p.

DENSO TEN Limited potrjuje, da je tip radijske opreme TN0027G skladen z Direktivo 2014/53/EU.
Celotno besedilo izjave EU o skladnosti je na voljo na naslednjem spletnem naslovu:
https://www.denso-ten.com/support/regulation/eu_doc/

Funkcija	Delovni frekvenčni pas	Maksimalna radiofrekvenčna moč
GSM	880~915 MHz 1710~1785 MHz	35dBm e.i.r.p. 32dBm e.i.r.p.
UMTS	880~915 MHz 1920~1980 MHz	25dBm e.i.r.p. 25dBm e.i.r.p.

Nëpërmjet kësaj, DENSO TEN Limited deklaron se lloji i aparatit të radios TN0027G është në përputhje me Direktivën 2014/53/EU.
Teksti i plotë i deklaratës së BE-së mbi përputhshmërinë është i disponueshëm në adresën e mëposhtme të internetit:
https://www.denso-ten.com/support/regulation/eu_doc/

Funksion	Banda e frekuencës së punës	Fuqia maksimale e frekuencave radio
GSM	880~915 MHz 1710~1785 MHz	35dBm e.i.r.p. 32dBm e.i.r.p.
UMTS	880~915 MHz 1920~1980 MHz	25dBm e.i.r.p. 25dBm e.i.r.p.

Ovim, DENSO TEN Limited izjavljuje da je ovaj tip radijske opreme TN0027G u skladu sa odredbama Direktive 2014/53/EU.
Kompletan tekst EU deklaracije o konformitetu je dostupan na sledećoj internet adresi:
https://www.denso-ten.com/support/regulation/eu_doc/

Funkcija	Radni frekvencijski pojas	Maksimalna rediofrekvencijska snaga
GSM	880~915 MHz 1710~1785 MHz	35dBm e.i.r.p. 32dBm e.i.r.p.
UMTS	880~915 MHz 1920~1980 MHz	25dBm e.i.r.p. 25dBm e.i.r.p.

Härmed försäkrar DENSO TEN Limited att denna typ av radioutrustning TN0027G överensstämmer med direktiv 2014/53/EU.
Den fullständiga texten till EU-försäkran om överensstämmelse finns på följande webbadress:
https://www.denso-ten.com/support/regulation/eu_doc/

Funktion	Operationsfrekvensbandet	Maximal radiofrekvenseffekt
GSM	880~915 MHz 1710~1785 MHz	35dBm e.i.r.p. 32dBm e.i.r.p.
UMTS	880~915 MHz 1920~1980 MHz	25dBm e.i.r.p. 25dBm e.i.r.p.

DENSO TEN Limited, TN0027G türü telsiz ekipmanının 2014/53/EU Direktifine uygun olduğunu beyan etmektedir.
AB uygunluk beyanının tam metnine aşağıdaki internet adresinden ulaşılabilir:
https://www.denso-ten.com/support/regulation/eu_doc/

İşlev	Çalışma frekans bandı	Maksimum radyo-frekans gücü
GSM	880~915 MHz 1710~1785 MHz	35dBm e.i.r.p. 32dBm e.i.r.p.
UMTS	880~915 MHz 1920~1980 MHz	25dBm e.i.r.p. 25dBm e.i.r.p.

MEMO

MEMO

MEMO

This owner's manual applies to the SWIFT series.

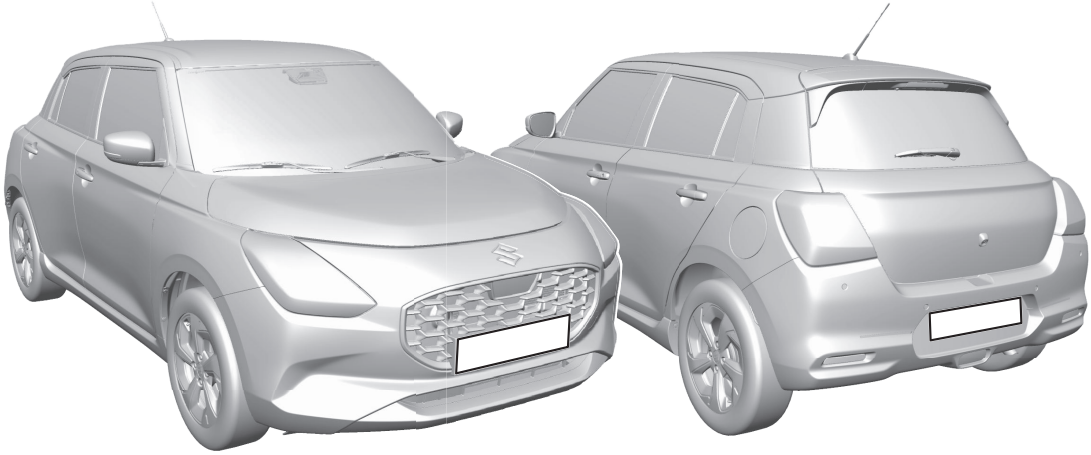

NOTE: The illustrated model is one of the SWIFT series.

Copyright © **Suzuki Motor Corporation** 2024 All Rights Reserved
No part of this document may be reproduced or transmitted in any form or by any means, electronic or mechanical, for any purpose, without the express written permission of Suzuki Motor Corporation.